BERGEN PIPE SUPPORTS

KEKSA

Strategic Partnership

Product Catalogue - Metric

A Global Solution

OVER 100 YEARS' EXPERIENCE, SUPPLYING POWER GENERATION, OIL, GAS, OFFSHORE, PETROCHEMICAL, PHARMACEUTICAL, CHEMICAL, MARINE AND WATER INDUSTRIES WORLDWIDE

The Pipe Supports Group has been supplying engineered pipe hangers since 1968, and has grown and developed its range of hangers, ancillaries and other support components ever since.

The Group has developed an enviable reputation for quality, reliability, competitiveness and engineering excellence and now supplies its products to every continent through an international sales network dedicated to meeting its customer's stringent quality and delivery requirements.

From its early origins in the UK the Pipe Supports Group has grown into a worldwide organisation with manufacturing plants in the USA and India.

The Group has a continual product development programme resulting in the most comprehensive range of products available from one source and all sold under a brand you can trust – Bergen Pipe Supports.

CONTENTS

Hanger Design 1

Constant Effort Supports 2

Variable Effort Supports 3

Pipe Clamps and Ancillaries — Load Group Basis 4

Additional Ancillary Items 5

Comlin Isolation Products 6

Easislide Low Friction Bearings 7

Dynamic Restraints 8

Cryogenic Supports 9

QUALITY ASSURANCE & STANDARDS

Quality Assurance and Control:
The Pipe Supports Group manufacturing facilities operate the same highly evolved quality assurance and control systems based upon the ISO9001 standard. Developed by our facility in the UK, we implement the same QA Manual and procedures in each of our manufacturing plants regardless of local requirements.

Where there are specific local requirements these are implemented alongside our established systems.

Our manufacturing facilities are accredited to ISO9001.

In addition, our US factories are accredited to ASME III, Division 2, Sub-section NF and have been awarded the ASME NS certificate for the supply of pipe supports to nuclear installations.

Our US facility located in Donora, Bergen Pipe Supports Inc. has an established track-record of supplying to the US nuclear power program.

In addition to QA/QC requirements we recognise the benefits of, and are working towards, accreditation to ISO14001 and ISO18001 for Health, Safety & Environment.

Manufacturing Standards: Throughout the catalogue we make frequent reference to material grades used for our product range. Our objective is to manufacture & supply the same product at all of our manufacturing facilities regardless of location.

Material grades are carefully chosen to give equivalence in terms of mechanical properties, weldability and physical performance. Comparison tables are given in the catalogue.

Our standard product range meets the requirements of IBR-REG-371, ASME B31.1, ASME B31.3, MSS-SP58 & BS EN13480: Part 3 where these specifications are applicable. Our cryogenic pipe supports are generally designed to meet the specific needs of the client and our molded polyurethane foam is manufactured in compliance with the CINI manual 'Insulation for Industries'.

Further information on design, specifications & materials can be found else where in this catalogue.

Over 100 Years' worldwide experience
Pipe Supports Group has over 100 years' experience of designing and supplying hanger systems for conventional and nuclear power stations, petrochemical complexes, pulp and paper mills and other industrial installations. ISO 9001 ASME approved, PSG has a reputation for providing reliable and cost-effective pipe support solutions.

Global design and supply solutions
With design offices in the USA and India utilising the most up-to-date engineering and design software, we offer a fully co-ordinated service; stress analysis of pipework, hanger selection, design and detailing, 3D CAD modeling, manufacturing and contract management. This service ensures cost-effective hanger systems, delivered in accordance with design requirements.

Pipe Supports Group design software
We have developed two computer programs to assist pipe support designers. PSDesigner is a stand-alone pipe support assembly design and detailing program which also links to 3D plant design systems. PSLCAD is a 2D pipe support draughting program which runs within AutoCAD. Both PSDesigner and PSLCAD are provided free of charge and can be downloaded from the www.pipesupports.com website.

PSDesigner
PSDesigner has been developed to meet the needs of today's pipe support designers.

PSDesigner Main Page.

PSDesigner is a versatile tool for designing pipe hanger assemblies using Pipe Supports Group's standard components. Several languages are supported.

Specifying Support Parameters in PS Designer.

Detailed hanger drawings are produced including bills of material. The standard PSDesigner drawing includes a view of the hanger assembly and detail views of key components.

Typical PSDesigner Drawing.

A bill of material and quotation for the hangers on a whole project can be produced.

Bill of Material in PSDesigner.

There is an option to export a 3D image of the support assembly. There are also options to export 2D drawings.

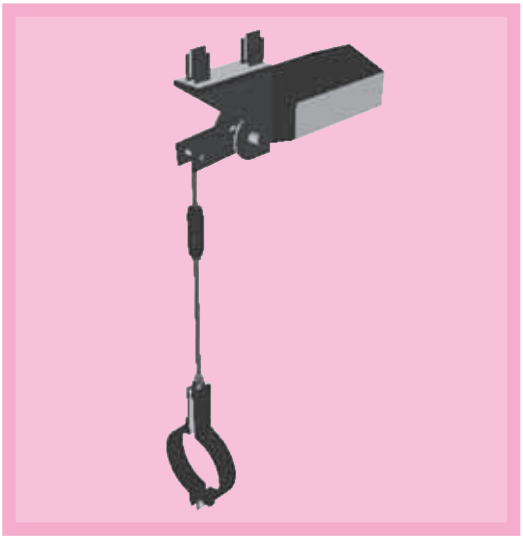

PSDesigner 3D Export.

The 3D export file created by PSDesigner can be opened by, or imported into, many 3D CAD programs.

We have developed full interfaces with the following plant design software:

SmartPlant3D (Intergraph)
Vantage PDMS / MDS and E3D (AVEVA)

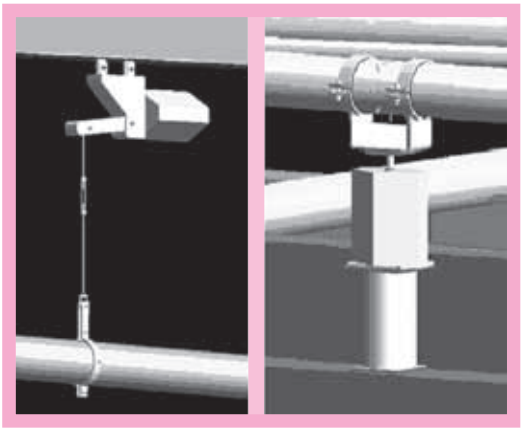

Support Assemblies in PDMS.

These are two-way links. Details about the pipe and its location are passed to PSDesigner which is used to design the support assembly and the details of the assembly are then passed back to the plant design program.

PSDesigner is continually being improved to provide our customers with the most efficient way of designing pipe support assemblies.

PSLCAD

PSLCAD runs within AutoCAD and is used to create support detail drawings using Pipe Supports Group standard components. PSLCAD is compatible with full version AutoCAD and also with AutoCAD LT when used in conjunction with supplementary programs which support Autolisp. For the latest list of compatible versions, please refer to the Pipe Supports website.

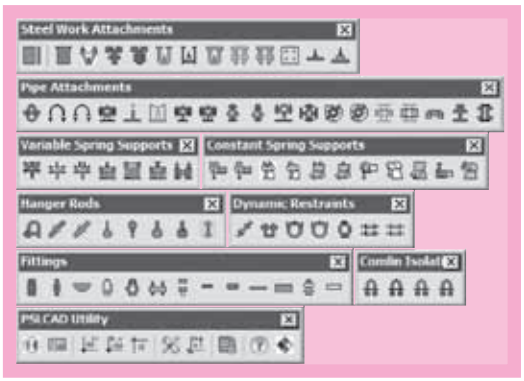

PSLCAD Toolbars.

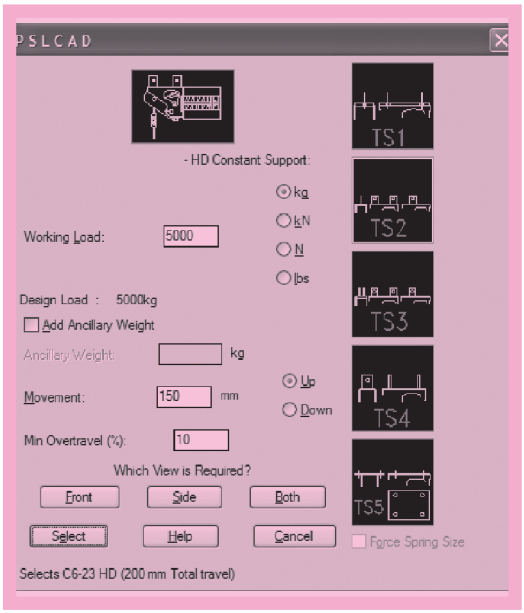

Constant Support Selection in PSLCAD.

In PSLCAD, components are drawn one at a time, so creating a drawing takes a little longer than it does when using PSDesigner, but with PSLCAD, you have the

versatility of AutoCAD which allows you to customise the design and the drawing to meet your particular needs.

It is possible to create a drawing using PSDesigner and then open the 2D DXF file with PSLCAD. You can then enhance the drawing using PSLCAD and AutoCAD utilities. This method of working makes use of the respective strengths of both programs; the basic drawing is created very quickly using PSDesigner, and the flexibility of PSLCAD and AutoCAD are used to make whatever detail enhancements are required.

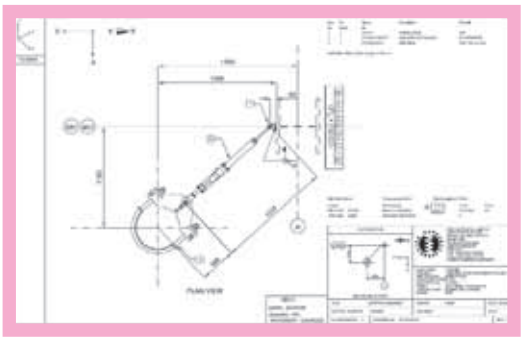

PSLCAD Drawing showing Hydraulic Snubber.

As well as all the standard PSG components, PSLCAD incorporates a comprehensive database of steel section sizes enabling the user to create drawings including the appropriate trimming steelwork.

Pipe Supports Group design services

Pipe Hanger Design
Pipe Supports Group has an experienced team of design engineers and pipe support draughtsmen who can design and detail pipe hanger drawings for all types of projects. We can prepare detailed support installation drawings from conceptual sketches or from plant layout information and pipe stress analysis output. Our engineers and draughtsmen are experienced in the use of PSDesigner and PSLCAD.

3D modelling
We can design and place full size support representations in 3D CAD models provided by customers. We can also provide 3D images of supports if customers prefer to place the supports in the model themselves.

Pipework analysis
Pipe Supports Group can offer pipework stress analysis to ASME B31.1, B31.3 and other design codes. Considering deadweight, thermal and dynamic effects, system stress levels and equipment loadings are calculated along with loads and movements acting at the support positions. We use one of several proprietary pipe stress analysis programs.

Finite element analysis
Pipe Supports Group has a team of design engineers qualified to carry out finite element analysis using ANSYS Professional. We are using this design tool to continuously update and expand our range of standard supports and also carry out analysis for specific design contracts.

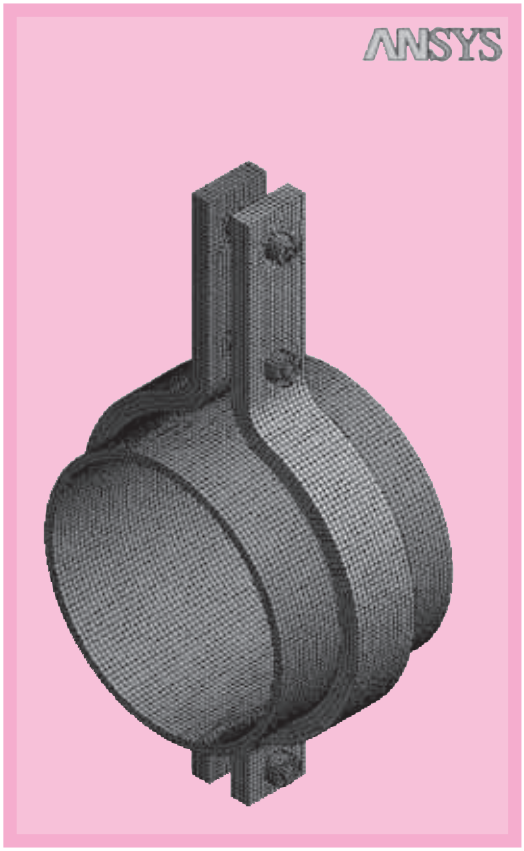

Pipe Clamp modelled in ANSYS

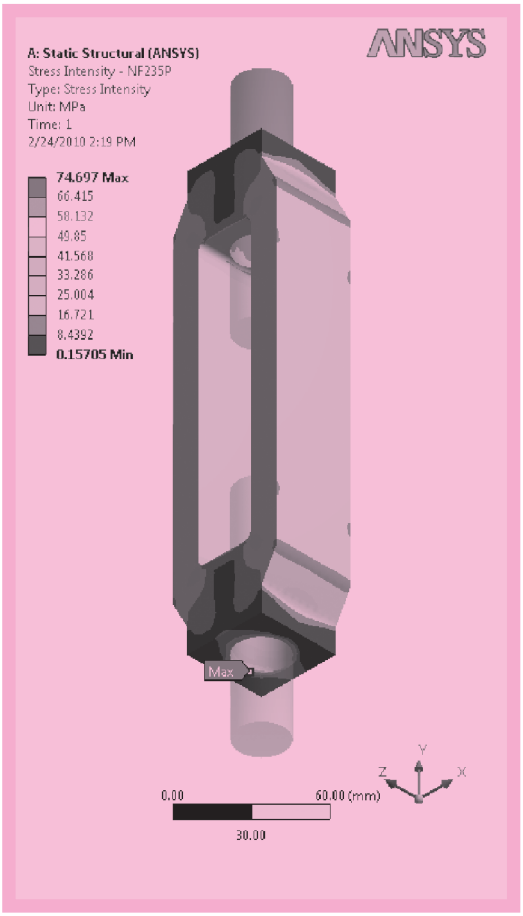

Stress Levels in Turnbuckle calculated using ANSYS.

Pipe Support Surveys
Our engineers are experienced in surveying existing pipework systems, reporting on the condition of hangers and making recommendations on their correct installation and future safe operation. Such surveys are increasingly being demanded by utilities and safety authorities.

CONSTANT EFFORT SUPPORTS

Our current range of Constant Effort Supports is the latest step in a continuous development programme which began in 1950 with the 'Con-Ten' support.

The range has been designed taking into account all the knowledge gained since these early days. This know-how has determined the optimum geometrical arrangement to ensure that, theoretically, the deviation of supporting effort is kept to a minimum. Fewer friction points ensure this applies in practice as well as theory. The single most critical factor affecting constancy is the spring, and we at Pipe Supports have made great efforts to design a range of springs that will deliver the performance our customers demand. In addition, the range has been designed to cater for the ever-increasing space limitations on offshore rigs, power stations and other process plants.

Other criteria that have been carefully considered, both during the conceptual and practical design stages, are the effects of ageing on the spring, the environment that hangers have to work in, the particular needs of the sophisticated pipework company in their requirement for 'balancing' lines during erection, and the capability to provide simple site adjustment to overcome changes or problems that occur late in the contract period.

Our range of Constant Effort Supports is the result, which we are proud to present in this catalogue.

APPLICATION

Constant Effort Supports are used to support pipework or equipment with an essentially constant supporting effort during what may be large vertical movement. Where the change in supporting effort which occurs when using variable effort supports is unacceptable, or where the amount of travel provided by variable effort supports is insufficient, constant effort supports should be specified. High temperature steam lines in power stations and flow lines on oil production platforms are examples of situations where large relative movement between piping and the supporting structure make the use of Constant Effort Supports essential.

RANGE

Our standard range of Constant Effort Supports caters for loads up to above 50 tonnes with movement provided up to 750 mm.

FRAME SIZE AND SPRING SIZE

The support designation gives the support frame size and spring size:

C5–17

FRAME SIZE C5 ***SPRING SIZE*** 17

Many dimensions are common for a given frame size.

SUPPORT TYPES

We offer eleven standard support types:

HS	Horizontal type – single point suspension
HD	Horizontal type – double point suspension
VS	Vertical type – single point suspension
VD	Vertical type – double point suspension
VIS	Vertical inverted type – single point suspension
VID	Vertical inverted type – double point suspension
HBM	Horizontal base mounted
HBMCS	Horizontal base mounted compression seat
VBM	Vertical base mounted
VBMCS	Vertical base mounted compression seat
VIBM	Vertical inverted base mounted

Details of Vertical inverted tandem type (type **VIT**) are available on request.

SUSPENSION STYLES

For the suspended types, five styles of top suspension are available, namely **TS1**, **TS2**, **TS3**, **TS4** and **TS5**.

Large Travel Constants

Constants VIBM

STANDARD FEATURES

1. **Compactness of units**. Installed heights and overall sizes designed to the minimum.
2. **Travel Indicator**. Enables the behaviour of the pipework to be monitored, indicating that pipework movement is as designed and calling attention to any system irregularities.

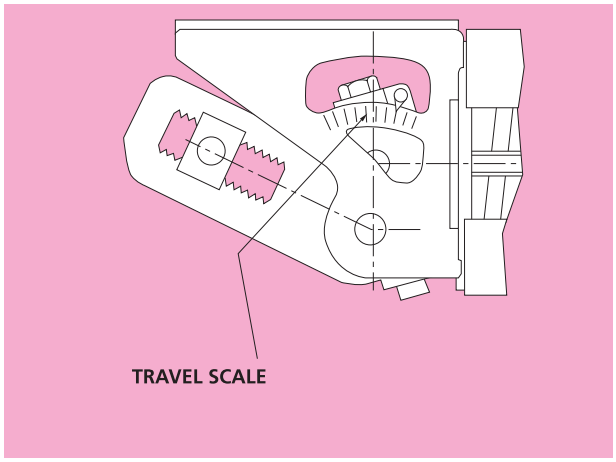

3. **Lever Rotation Indicator**. The support frames incorporate a window. The position of the lever rotation indicator within the window provides a visual indication of the position of the lever, and therefore confirmation that the support is taking load correctly. If the lever rotation indicator is away from the extremities of the window, the support is taking load. If the indicator is at the back of the window, the support may be off load; if it is at the front, the support may be overloaded. If the indicator is at either extremity, adjustment of the support travel position and/or load adjustment is required.

   The lever rotation indicator provides quick visual confirmation that the support is "on load"; this assessment can be made from a considerable distance.

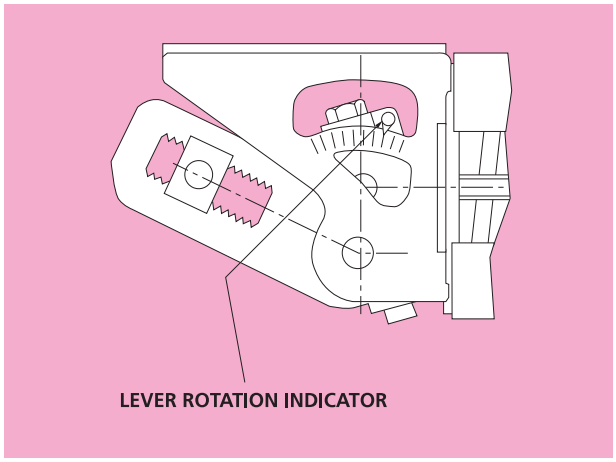

4. **Load Adjustment Facility**. A minimum of +/-20% site load adjustment is available without altering the travel provided. The load adjuster is conveniently situated for site use. In cases where greater load adjustment is required this can be supplied, by prior agreement.

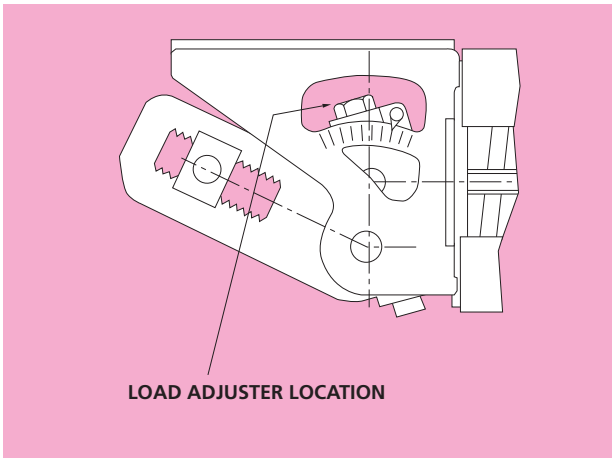

5. **Ultimate Stop**. The construction of the main frame is such that in the case of overload the lever arm will be arrested prior to the spring becoming solid.

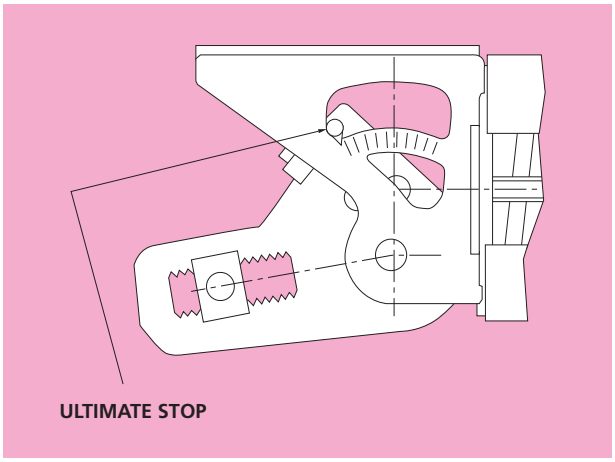

6. **Infinitely Variable Locking/Balancing Device**. Every unit is sent to site locked in the D.T.S. (Despatched to Site) position shown on the general arrangement drawing for the contract. The locking mechanism comprises two locking rods which run the full length of the spring housing. The hanger is locked and becomes a rigid support by restraining the spring compression plate as shown in the illustration following. The locking device being constructed from two threaded members operates in an infinitely variable number of positions and is securely attached to the support for future re-use, regardless of pipework position.

   For details on how to use the locking/balancing device see section headed Installation and Erection.

STANDARD FEATURES

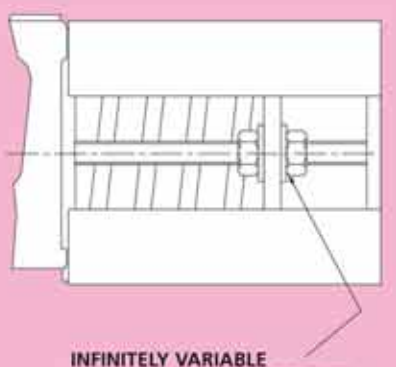

7. **Variable Position Load Pin Carrier**. The position of the load pin is determined and set during manufacture to achieve the design load and travel requested.

For supports other than those with very small movement provided, a variable position load pin carrier is fitted; this provides potential for additional load adjustment. By moving the carrier closer to the fulcrum, the supporting effort will be increased and the travel provided decreased. By moving the carrier in the opposite direction, the supporting effort is decreased, and the travel provided increased. This provides maximum flexibility in situations where changes to the required supporting effort can occur.

Once the carrier is repositioned, there is still the +/–20% load adjustment available.

Variable position load pin carriers are fitted to supports whose total movements provided are greater than the following values:

C1: 120 mm, C2: 120 mm,

C3: 120 mm, C4: 160 mm, C5: 100 mm, C6: 130 mm,

C7: 180 mm.

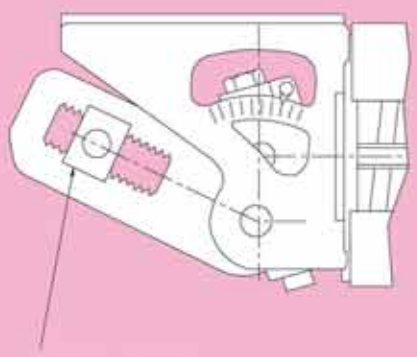

8. **Bearings**. The bearings used are PTFE dry bearings and are enclosed to stop the ingress of dirt and dust. No maintenance or lubrication is required.

9. **Name Plate**. Each support is supplied with a deeply engraved nameplate giving the following data:

The serial number allocated to each support is unique and will allow traceability of the support details for many years. As a double safeguard against loss or overpainting of nameplate, etc., each support is steel stamped with the customer's reference mark.

10. **Testing**. Every unit is tested in our calibrated test rigs to prove mechanical performance. Deviation is recorded and graphical reports are available if requested. Our standard range of constants deliver supporting effort to within +/-5% of the specified design load. Our standard documentation includes a certificate of works test for mechanical performance and a certificate of conformity for materials and manufacture.

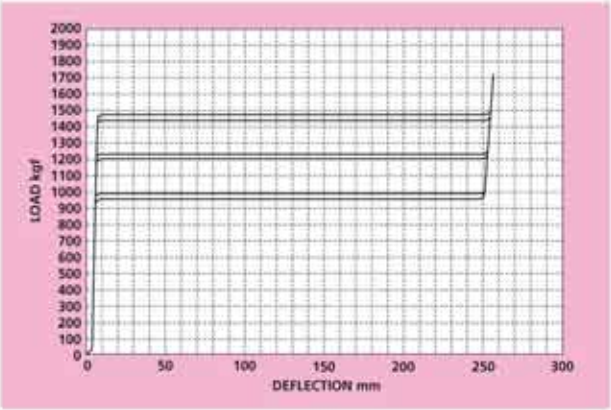

11. **High Performance Supports.** We offer supports that will operate with minimal friction and hysteresis. These supports are available by special request and will deliver supporting effort to within +/-2% of the specified design load. Over an adjusted range of +/-10% of the design load the supports remain within +/-2% of the adjusted load. These supports have precision load adjustment scales and utilise fine pitched threads for the load adjustment mechanism allowing for very accurate adjustment of the support in situ.

12. **Corrosion Protection.** All springs are plastic coated to give maximum corrosion protection. Threaded parts are supplied hot-dipped galvanised while carbon steel parts are painted with one coat of high-build acrylic semi-gloss paint. Other options are available by request.

CONSTANT EFFORT SUPPORTS

SELECTION

Selection of Constant Effort Supports can either be done manually from the catalogue as described below, or by using computer software that is available from our sales department.

SELECTION FROM THE CATALOGUE

1. Determine load and theoretical movement to be catered for by the support. It is important to remember to add the weight of lagging, pipe clamps and other suspended components to the pipe weight.
2. The selection charts show the maximum vertical movement any support will provide for a given load. A certain amount of overtravel must be added to the theoretical movement. Normally we would recommend about 10% of theoretical movement, but on no account less than 25 mm. It should, however, be noted that individual companies have their own specifications regarding overtravel, to which we would adhere on request.
3. Decide upon the type of support to be used. Refer to the diagrams located on pages 13 & 36. The type of unit is dictated by the relative positions of pipe and steelwork and by available space. Note that some areas of the selection chart cannot be used for types **VS**, **VD** and **VBM**, and that maximum travel is reduced for types **HS** and **VIS**.
4. Details of top suspensions are given later in the catalogue, the nature of the support position will determine the top suspension to be employed. Single point suspension, i.e. **HS**, **VS** and **VIS**, has the advantage of being rotatable about the suspension point, thus clearing any obstructions in close proximity.
5. Having determined type of hanger, load to be supported, total travel required, turn to the load selection chart and proceed as follows:

   a) Locate total travel required at side of chart.

   b) Move horizontally across until load equal to or just greater than the load to be supported is located. Never select less than the actual load.

   c) Read off vertically support size.

   d) Return to load and move down remaining in same vertical column until nearest figure to design load is found.

   e) Returning horizontally across this column will give total travel provided for this support.

DETERMINATION OF SUPPORT DIMENSIONS

Having recorded support size, type and total movement provided, proceed as follows:

1. Open out pages 13 & 36 to show the appropriate type.
2. Turn to the page giving dimensions of the required support frame size, i.e. **C1**, **C2**, **C3**, etc.
3. Dimensions can now be read directly from the tables shown.

   Dimensions are in one of four categories:

   a) Dependent on Movement Provided

   These dimensions are given on the right hand page and in the table headed single point suspension.

   b) Travel Range Dependent

   These dimensions are prefixed **T** or **U** and are given in the left hand table on the left hand page. Note the top suspension details **AA**, **BB**, etc. which are also spring size dependent are also given in this table.

   c) Spring Size Dependent

   These dimensions are prefixed **S** and are given in the mid centre table on the left hand page.

   d) Fixed

   These dimensions are prefixed **F** or **X** and are given in the top centre table on the left hand page.
4. Note that the take out dimensions **A1**, **A2**, **A3**, **J4**, **J5**, **J6**, **J7** and **J8** and pivot to load pin dimensions **D** and **E** are given at zero rotation of the lever, that is with the lever in the uppermost position. To determine the take out dimension in the installed condition, the installed travel position must be added to **A1**, **A2** or **A3** or subtracted from **J4**, **J5**, **J6**, **J7** or **J8**. e.g. for a support with cold to hot movement 250 mm up and 290 mm movement provided, the installed travel position might be set at 270 mm.

ORDERING INFORMATION

Either:

a) Advise:
- i) Number off.
- ii) Support Description, i.e.

C4–13	**HD**	**TS2**	**150**
Size	***Type***	***Susp. Style***	***Movt. Prov.***

- iii) Installed to operating movement and direction.
- iv) Finish required.
- v) Support Mark No.
- vi) Thread form.

or **b)** Advise:
- i) Number off.
- ii) Support Type, e.g. **VS**.
- iii) Suspension style (if applicable), e.g. **TS3**.
- iv) Supporting effort required.
- v) Installed to operating movement and direction.
- vi) Any specific requirement for overtravel.
- vii) Finish required.
- viii) Support Mark No.
- ix) Thread form.

In this case, we will determine the support size to be supplied.

CONSTANT EFFORT SUPPORTS

INSTALLATION AND ERECTION

Types HS, HD, VS, VD, HBM, VBM, VIS, VID & VIBM:

1. Make fast upper and lower suspension connections ensuring the hanger rod is directly over the required point of attachment remembering that the lower suspension rod should not be more than 5 deg. from the vertical in any condition.

2. All supports are sent to site locked in the D.T.S. (Despatched to site) position shown on the contract drawing. To ensure the support is taking load correctly, adjust the turnbuckle until the pipework is at the correct elevation.

   If the supporting system is in balance, the locking nuts holding the spring compression plate will be easily moved and should be parked at opposite extremities of the locking rods (away from the moving spring plate). If the locking nut nearest to the lever arm will not rotate, then the support is overloaded and positive adjustment on the load adjuster is required until the nut just becomes free; the support is then in balance.

   If the nuts furthest from the lever arm will not rotate, the support is providing too much supporting effort, and negative load adjustment is required until these nuts just become free.

3. When the system is subject to cold pull, the support is delivered locked in the D.T.S. position. Prior to cold pull, the support must be unlocked to allow the support to travel and 'assist' with the cold pull.

   On completion of the cold pull, the indicator reading should be that shown as P.T.E. (Prior to Thermal Expansion) on the contract drawing. It is also possible to achieve the cold pull movement by means of the support turnbuckle with the support remaining locked, in this instance D.T.S. = P.T.E.

4. If the pipework is subject to lagging, hydrostatic testing or acid cleaning after installation of the supports, the supports should remain locked until these operations are complete.

5. IT IS IMPERATIVE THAT A FINAL CHECK OF ALL SUPPORTS IS CARRIED OUT TO ENSURE THAT THEY ARE ALL UNLOCKED PRIOR TO THERMAL EXPANSION TAKING PLACE, AND TO ENSURE THAT THEY ARE SET IN THEIR CORRECT P.T.E. POSITIONS.

6. Supports must not be used for purposes other than that for which they have been designed. They must not be used for rigging and erection purposes. They should be handled as pieces of semi-machinery and stored indoors in a dry environment.

Types HBMCS & VBMCS

1. The same procedures as above apply except that the transference of the load to the support is done by means of the adjuster nut which is situated below the load pad instead of by means of the turnbuckle.

MAINTENANCE

It is recommended that supports are inspected every six months for the following:

1. That no debris or tools are impairing the correct operation of the support.

2. That position of the travel indicator is as anticipated in the design. If this is not the case, the pipework engineer should be notified.

OPTIONAL FEATURES

1. Limit Stops. The infinitely variable locking/balancing device may be enhanced to precisely limit spring travel. Additional nuts welded in position are used to limit movement to a specified amount.

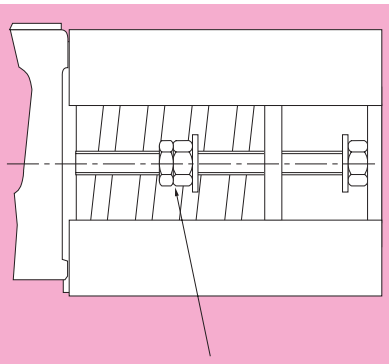

LIMIT STOP OPTION

2. The construction of Constant Effort Supports makes the application of special paint finishes a simple matter.

3. For low temperature applications suitable grades of carbon steel are used to suit the specified temperature range. Where necessary the material used for spring coils is also changed to an appropriate grade of steel.

4. For extreme corrosive conditions, extra-thick body section can be supplied.

5. Fully galvanised supports are available where required. Due to the construction of the units, no welding takes place after galvanising.

6. For extended life in offshore or other situations subject to highly corrosive conditions, supports are available in various grades of stainless steel with the spring coil from 17/4 PH (precipitation hardened) stainless steel.

   Please check with our design department for dimensional information.

7. In Cryogenic applications supports are available manufactured entirely in austenitic stainless steel.

   Please check with our design department for dimensional information.

8. For types **HBMC** and **VBMC**, where lateral loading greater than 25% of the maximum operating load is envisaged, PTFE covered load pads should be specified.

9. Direct Reading Travel Indicator. For precise setting of the support position, a direct reading indicator, giving the travel position in mm is available upon request.

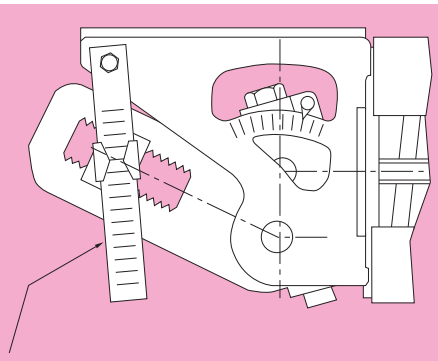

DIRECT READING TRAVEL SCALE

A more detailed erection and maintenance procedure is available on request.

CONSTANT EFFORT SUPPORTS

TURN OUT THIS PAGE FOR DIAGRAMS OF
CONSTANT EFFORT SUPPORTS: SUSPENDED TYPES

CONSTANT EFFORT SUPPORTS: SUSPENDED TYPES

TYPES HD & HS

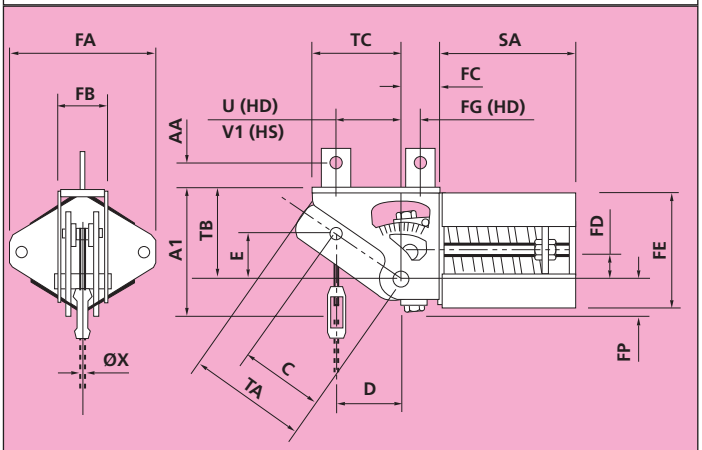

TYPES VD & VS

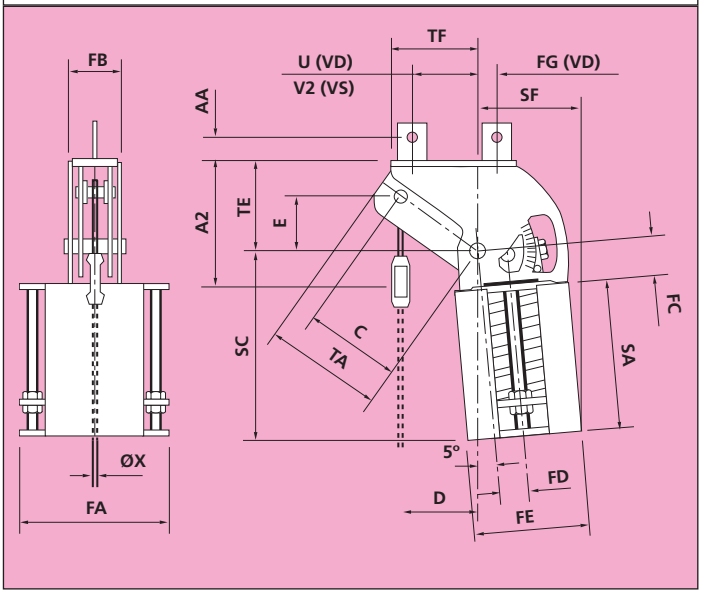

TYPES VID & VIS

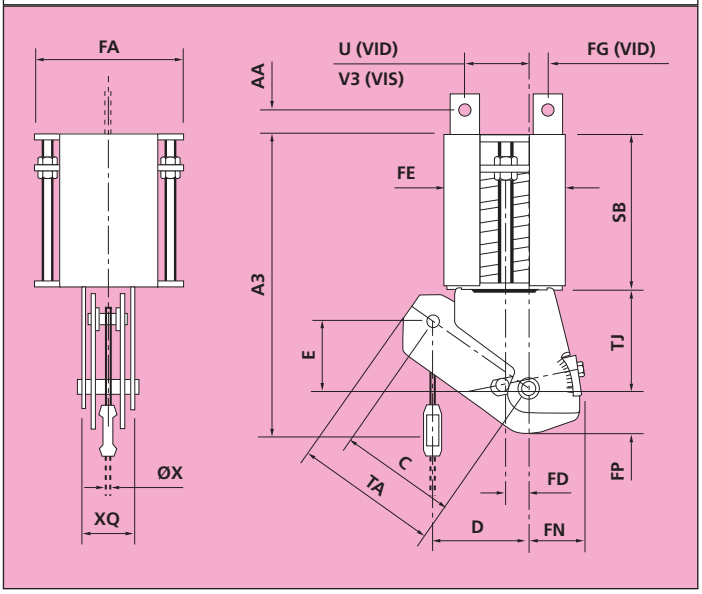

ALTERNATIVE TOP SUSPENSION STYLES

STYLE TS1 (TYPES HD & VD)

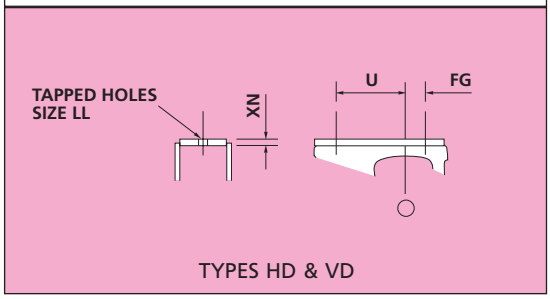

STYLE TS2 (ALL TYPES)

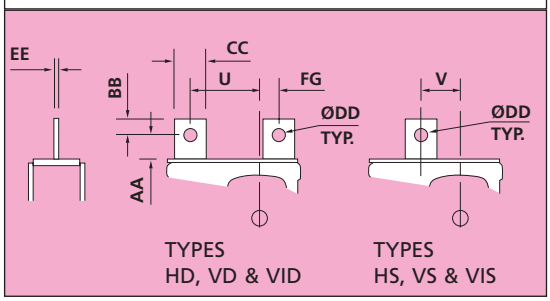

STYLE TS3 (ALL TYPES)

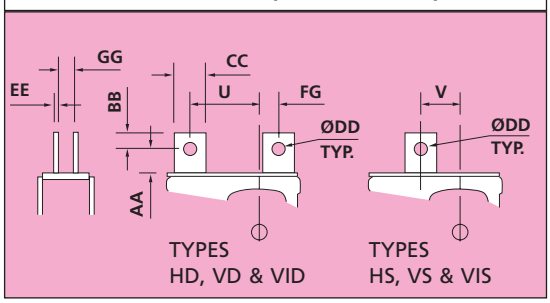

STYLE TS4 (TYPES HD, VD & VID)

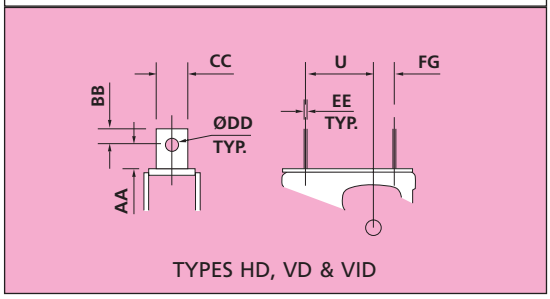

STYLE TS5 (TYPES HD & VD)

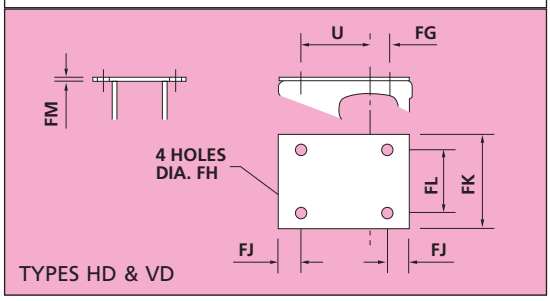

CONSTANT EFFORT SUPPORTS: BASE MOUNTED TYPES
ARE LOCATED ON PAGE 36

CONSTANT SUPPORT SELECTION CHART (LOADS IN NEWTONS)

SIZE / TRAVEL	C1-1	C1-2	C1-3	C1-4	C2-5	C2-6	C2-7	C3-8	C3-9	C3-10	C4-11	C4-12	C4-13	C4-14	C4-15	C5-16	C5-17	C5-18	C5-19	TRAVEL
40	724	1001	1316	1837	2307	3242	4182	4615	6484	8364	11074	14767	19674							**40**
50	579	801	1052	1470	1846	2593	3346	3692	5187	6691	8859	11813	15739	21256	29658					**50**
60	482	667	877	1225	1538	2161	2788	3076	4322	5576	7383	9844	13116	17714	24715	33506	42495			**60**
70	413	572	752	1050	1318	1852	2390	2637	3705	4779	6328	8438	11242	15183	21184	28719	36425	44830	56038	**70**
80	362	501	658	919	1154	1621	2091	2307	3242	4182	5537	7383	9837	13285	18536	25130	31872	39227	49033	**80**
90	322	445	585	817	1025	1441	1859	2051	2882	3717	4922	6563	8744	11809	16477	22337	28330	34868	43585	**90**
100	289	400	526	735	923	1297	1673	1846	2593	3346	4430	5907	7869	10628	14829	20104	25497	31381	39227	**100**
110	263	364	478	668	839	1179	1521	1678	2358	3041	4027	5370	7154	9662	13481	18276	23179	28528	35661	**110**
120	241	334	439	612	769	1081	1394	1538	2161	2788	3691	4922	6558	8857	12358	16753	21248	26151	32689	**120**
130	223	308	405	565	710	997	1287	1420	1995	2574	3407	4544	6053	8176	11407	15464	19613	24139	30174	**130**
140	207	286	376	525	659	926	1195	1318	1852	2390	3164	4219	5621	7592	10592	14360	18212	22415	28019	**140**
150	193	267	351	490	615	864	1115	1231	1729	2230	2953	3938	5246	7085	9886	13402	16998	20921	26151	**150**
160	181	250	329	459	577	810	1046	1154	1621	2091	2769	3692	4918	6643	9268	12565	15936	19613	24517	**160**
170	170	236	310	432	543	763	984	1086	1526	1968	2606	3475	4629	6252	8723	11826	14998	18460	23074	**170**
180	161	222	292	408	513	720	929	1025	1441	1859	2461	3281	4372	5905	8238	11169	14165	17434	21793	**180**
190	152	211	277	387	486	682	880	972	1365	1761	2331	3109	4142	5594	7805	10581	13420	16516	20646	**190**
200	145	200	263	367	461	648	836	923	1297	1673	2215	2953	3935	5314	7415	10052	12749	15691	19613	**200**
210	138	191	251	350	439	617	797	879	1235	1593	2109	2813	3747	5061	7061	9573	12142	14943	18679	**210**
220	132	182	239	334	420	589	760	839	1179	1521	2013	2685	3577	4831	6741	9138	11590	14264	17830	**220**
230	126	174	229	320	401	564	727	803	1128	1455	1926	2568	3421	4621	6447	8741	11086	13644	17055	**230**
240	121	167	219	306	385	540	697	769	1081	1394	1846	2461	3279	4428	6179	8377	10624	13076	16344	**240**
250	116	160	210	294	369	519	669	738	1037	1338	1772	2363	3148	4251	5932	8041	10199	12553	15691	**250**
260	111	154	202	283	355	499	643	710	997	1287	1704	2272	3027	4088	5704	7732	9807	12070	15087	**260**
270	107	148	195	272	342	480	620	684	961	1239	1641	2188	2915	3936	5492	7446	9443	11623	14528	**270**
280	103	143	188	262	330	463	597	659	926	1195	1582	2110	2811	3796	5296	7180	9106	11208	14009	**280**
290	100	138	181	253	318	447	577	637	894	1154	1527	2037	2714	3665	5113	6932	8792	10821	13526	**290**
300	96	133	175	245	308	432	558	615	864	1115	1477	1969	2623	3543	4943	6701	8499	10460	13076	**300**
310					298	418	540	595	837	1079	1429	1905	2539	3428	4784	6485	8225	10123	12654	**310**
320					288	405	523	577	810	1046	1384	1846	2459	3321	4634	6282	7968	9807	12258	**320**
330					280	393	507	559	786	1014	1342	1790	2385	3221	4494	6092	7726	9509	11887	**330**
340					271	381	492	543	763	984	1303	1737	2315	3126	4362	5913	7499	9230	11537	**340**
350					264	370	478	527	741	956	1266	1688	2248	3037	4237	5744	7285	8966	11208	**350**
360					256	360	465	513	720	929	1230	1641	2186	2952	4119	5584	7083	8717	10896	**360**
370					249	350	452	499	701	904	1197	1596	2127	2872	4008	5433	6891	8481	10602	**370**
380					243	341	440	486	682	880	1166	1554	2071	2797	3902	5290	6710	8258	10323	**380**
390					237	332	429	473	665	858	1136	1515	2018	2725	3802	5155	6538	8046	10058	**390**
400					231	324	418	461	648	836	1107	1477	1967	2657	3707	5026	6374	7845	9807	**400**
410								450	633	816	1080	1441	1919	2592	3617	4903	6219	7654	9567	**410**
420								439	617	797	1055	1406	1874	2531	3531	4787	6071	7472	9340	**420**
430								429	603	778	1030	1374	1830	2472	3449	4675	5930	7298	9122	**430**
440								420	589	760	1007	1342	1789	2416	3370	4569	5795	7132	8915	**440**
450								410	576	743	984	1313	1749	2362	3295	4467	5666	6974	8717	**450**
460								401	564	727	963	1284	1711	2310	3224	4370	5543	6822	8528	**460**
470								393	552	712	942	1257	1674	2261	3155	4277	5425	6677	8346	**470**
480								385	540	697	923	1231	1639	2214	3089	4188	5312	6538	8172	**480**
490								377	529	683	904	1205	1606	2169	3026	4103	5204	6404	8005	**490**
500								369	519	669	886	1181	1574	2126	2966	4021	5099	6276	7845	**500**
510											869	1158	1543	2084	2908	3942	4999	6153	7691	**510**
520											852	1136	1513	2044	2852	3866	4903	6035	7544	**520**
530											836	1114	1485	2005	2798	3793	4811	5921	7401	**530**
540											820	1094	1457	1968	2746	3723	4722	5811	7264	**540**
550											805	1074	1431	1932	2696	3655	4636	5706	7132	**550**
560											791	1055	1405	1898	2648	3590	4553	5604	7005	**560**
570											777	1036	1381	1865	2602	3527	4473	5505	6882	**570**
580											764	1018	1357	1832	2557	3466	4396	5411	6763	**580**
590											751	1001	1334	1801	2513	3407	4322	5319	6649	**590**
600											738	984	1312	1771	2472	3351	4250	5230	6538	**600**
610																3296	4180	5144	6431	**610**
620																3243	4112	5061	6327	**620**
630																3191	4047	4981	6226	**630**
640																3141	3984	4903	6129	**640**
650																3093	3923	4828	6035	**650**
660																3046	3863	4755	5943	**660**
670																3001	3806	4684	5855	**670**
680																2956	3750	4615	5769	**680**
690																2914	3695	4548	5685	**690**
700																2872	3642	4483	5604	**700**
710																2831	3591	4420	5525	**710**
720																2792	3541	4359	5448	**720**
730																2754	3493	4299	5374	**730**
740																2717	3446	4241	5301	**740**
750																2680	3400	4184	5230	**750**

SIZE	C1-1	C1-2	C1-3	C1-4	C2-5	C2-6	C2-7	C3-8	C3-9	C3-10	C4-11	C4-12	C4-13	C4-14	C4-15	C5-16	C5-17	C5-18	C5-19	

DO NOT SELECT TYPES **VS**, **VD** OR **VBM** ABOVE THE BLACK LINE.
DO NOT SELECT TYPES **HS** OR **VIS** BELOW THE RED LINE.
REMEMBER TO ADD OVERTRAVEL ALLOWANCE TO PIPE MOVEMENT BEFORE SELECTING SUPPORT SIZE.

CONSTANT SUPPORT SELECTION CHART (LOADS IN NEWTONS)

SIZE TRAVEL	C6-20	C6-21	C6-22	C6-23	C7-24	C7-25	C7-26	C7-27	C7-28	C7-29	C8-30	C8-31	C8-32	C9-33	C9-34	TRAVEL
40																**40**
50																**50**
60																**60**
70																**70**
80	63743	79679														**80**
90	56661	70826	87170	108963	122583	163444										**90**
100	50995	63743	78453	98066	110325	147100										**100**
110	46359	57948	71321	89151	100295	133727	167159									**110**
120	42495	53119	65378	81722	91937	122583	153229	183875	224736							**120**
130	39227	49033	60349	75436	84865	113154	141442	169730	207448	248938						**130**
140	36425	45531	56038	70048	78803	105071	131339	157607	192631	231157						**140**
150	33996	42495	52302	65378	73550	98066	122583	147100	179789	215746	294200					**150**
160	31872	39840	49033	61292	68953	91937	114922	137906	168552	202262	275812	344765				**160**
170	29997	37496	46149	57686	64897	86529	108162	129794	158637	190364	259588	324485	389382	432646	519176	**170**
180	28330	35413	43585	54481	61292	81722	102153	122583	149824	179789	245166	306458	367749	408610	490332	**180**
190	26839	33549	41291	51614	58066	77421	96776	116131	141938	170326	232263	290328	348394	387105	464526	**190**
200	25497	31872	39227	49033	55162	73550	91937	110325	134841	161810	220650	275812	330974	367749	441299	**200**
210	24283	30354	37359	46698	52536	70048	87559	105071	128420	154104	210142	262678	315214	350238	420285	**210**
220	23179	28974	35661	44576	50148	66864	83579	100295	122583	147100	200591	250738	300886	334318	401181	**220**
230	22172	27714	34110	42638	47967	63956	79946	95935	117253	140704	191869	239837	287804	319782	383738	**230**
240	21248	26560	32689	40861	45969	61292	76614	91937	112368	134841	183875	229843	275812	306458	367749	**240**
250	20398	25497	31381	39227	44130	58840	73550	88260	107873	129448	176520	220650	264780	294200	353039	**250**
260	19613	24517	30174	37718	42433	56577	70721	84865	103724	124469	169730	212163	254596	282884	339461	**260**
270	18887	23609	29057	36321	40861	54481	68102	81722	99883	119859	163444	204305	245166	272407	326888	**270**
280	18212	22765	28019	35024	39402	52536	65670	78803	96315	115578	157607	197009	236410	262678	315214	**280**
290	17584	21980	27053	33816	38043	50724	63405	76086	92994	111593	152172	190215	228258	253620	304344	**290**
300	16998	21248	26151	32689	36775	49033	61292	73550	89894	107873	147100	183875	220650	245166	294200	**300**
310	16450	20562	25307	31634	35589	47452	59314	71177	86994	104393	142355	177943	213532	237258	284709	**310**
320	15936	19920	24517	30646	34477	45969	57461	68953	84276	101131	137906	172383	206859	229843	275812	**320**
330	15453	19316	23774	29717	33432	44576	55720	66864	81722	98066	133727	167159	200591	222878	267454	**330**
340	14998	18748	23074	28843	32448	43265	54081	64897	79318	95182	129794	162242	194691	216323	259588	**340**
350	14570	18212	22415	28019	31521	42029	52536	63043	77052	92463	126086	157607	189128	210142	252171	**350**
360	14165	17706	21793	27241	30646	40861	51076	61292	74912	89894	122583	153229	183875	204305	245166	**360**
370	13782	17228	21204	26504	29818	39757	49696	59635	72887	87465	119270	149088	178905	198783	238540	**370**
380	13420	16775	20646	25807	29033	38710	48388	58066	70969	85163	116131	145164	174197	193552	232263	**380**
390	13076	16344	20116	25145	28288	37718	47147	56577	69149	82979	113154	141442	169730	188589	226307	**390**
400	12749	15936	19613	24517	27581	36775	45969	55162	67421	80905	110325	137906	165487	183875	220650	**400**
410	12438	15547	19135	23919	26908	35878	44847	53817	65776	78932	107634	134542	161451	179390	215268	**410**
420	12142	15177	18679	23349	26268	35024	43780	52536	64210	77052	105071	131339	157607	175119	210142	**420**
430	11859	14824	18245	22806	25657	34209	42762	51314	62717	75260	102628	128285	153942	171046	205255	**430**
440	11590	14487	17830	22288	25074	33432	41790	50148	61292	73550	100295	125369	150443	167159	200591	**440**
450	11332	14165	17434	21793	24517	32689	40861	49033	59930	71915	98066	122583	147100	163444	196133	**450**
460	11086	13857	17055	21319	23984	31978	39973	47967	58627	70352	95935	119918	143902	159891	191869	**460**
470	10850	13562	16692	20865	23473	31298	39122	46947	57379	68855	93893	117367	140840	156489	187787	**470**
480	10624	13280	16344	20431	22984	30646	38307	45969	56184	67421	91937	114922	137906	153229	183875	**480**
490	10407	13009	16011	20014	22515	30020	37525	45031	55037	66045	90061	112576	135092	150102	180122	**490**
500	10199	12749	15691	19613	22065	29420	36775	44130	53937	64724	88260	110325	132390	147100	176520	**500**
510	9999	12499	15383	19229	21632	28843	36054	43265	52879	63455	86529	108162	129794	144215	173059	**510**
520	9807	12258	15087	18859	21216	28288	35361	42433	51862	62235	84865	106082	127298	141442	169730	**520**
530	9622	12027	14802	18503	20816	27755	34693	41632	50884	61060	83264	104080	124896	138773	166528	**530**
540	9443	11804	14528	18160	20431	27241	34051	40861	49941	59930	81722	102153	122583	136203	163444	**540**
550	9272	11590	14264	17830	20059	26745	33432	40118	49033	58840	80236	100295	120354	133727	160472	**550**
560	9106	11383	14009	17512	19701	26268	32835	39402	48158	57789	78803	98504	118205	131339	157607	**560**
570	8946	11183	13764	17205	19355	25807	32259	38710	47313	56775	77421	96776	116131	129035	154842	**570**
580	8792	10990	13526	16908	19022	25362	31703	38043	46497	55796	76086	95108	114129	126810	152172	**580**
590	8643	10804	13297	16621	18699	24932	31165	37398	45709	54851	74796	93496	112195	124661	149593	**590**
600	8499	10624	13076	16344	18387	24517	30646	36775	44947	53937	73550	91937	110325	122583	147100	**600**
610	8360	10450	12861	16076	18086	24115	30143	36172	44210	53052	72344	90430	108516	120574	144688	**610**
620	8225	10281	12654	15817	17794	23726	29657	35589	43497	52197	71177	88972	106766	118629	142355	**620**
630	8094	10118	12453	15566	17512	23349	29186	35024	42807	51368	70048	87559	105071	116746	140095	**630**
640	7968	9960	12258	15323	17238	22984	28730	34477	42138	50566	68953	86191	103430	114922	137906	**640**
650	7845	9807	12070	15087	16973	22631	28288	33946	41490	49788	67892	84865	101838	113154	135784	**650**
660	7726	9658	11887	14859	16716	22288	27860	33432	40861	49033	66864	83579	100295	111439	133727	**660**
670	7611	9514	11709	14637	16466	21955	27444	32933	40251	48301	65866	82332	98798	109776	131731	**670**
680	7499	9374	11537	14422	16224	21632	27040	32448	39659	47591	64897	81121	97345	108162	129794	**680**
690	7391	9238	11370	14213	15989	21319	26649	31978	39084	46901	63956	79946	95935	106594	127913	**690**
700	7285	9106	11208	14009	15761	21014	26268	31521	38526	46231	63043	78803	94564	105071	126086	**700**
710	7182	8978	11050	13812	15539	20718	25898	31077	37984	45580	62155	77694	93232	103591	124310	**710**
720	7083	8853	10896	13620	15323	20431	25538	30646	37456	44947	61292	76614	91937	102153	122583	**720**
730	6986	8732	10747	13434	15113	20151	25188	30226	36943	44331	60452	75565	90678	100753	120904	**730**
740	6891	8614	10602	13252	14909	19878	24848	29818	36444	43732	59635	74544	89453	99392	119270	**740**
750	6799	8499	10460	13076	14710	19613	24517	29420	35958	43149	58840	73550	88260	98066	117680	**750**

SIZE	C6-20	C6-21	C6-22	C6-23	C7-24	C7-25	C7-26	C7-27	C7-28	C7-29	C8-30	C8-31	C8-32	C9-33	C9-34	

DO NOT SELECT TYPES **VS**, **VD** OR **VBM** ABOVE THE BLACK LINE.
DO NOT SELECT TYPES **HS** OR **VIS** BELOW THE RED LINE.
REMEMBER TO ADD OVERTRAVEL ALLOWANCE TO PIPE MOVEMENT BEFORE SELECTING SUPPORT SIZE.

CONSTANT SUPPORT SELECTION CHART (LOADS IN kgf)

SIZE TRAVEL	C1-1	C1-2	C1-3	C1-4	C2-5	C2-6	C2-7	C3-8	C3-9	C3-10	C4-11	C4-12	C4-13	C4-14	C4-15	C5-16	C5-17	C5-18	C5-19	TRAVEL
40	74	102	134	187	235	331	426	471	661	853	1129	1506	2006							**40**
50	59	82	107	150	188	264	341	376	529	682	903	1205	1605	2168	3024					**50**
60	49	68	89	125	157	220	284	314	441	569	753	1004	1337	1806	2520	3417	4333			**60**
70	42	58	77	107	134	189	244	269	378	487	645	860	1146	1548	2160	2929	3714	4571	5714	**70**
80	37	51	67	94	118	165	213	235	331	426	565	753	1003	1355	1890	2563	3250	4000	5000	**80**
90	33	45	60	83	105	147	190	209	294	379	502	669	892	1204	1680	2278	2889	3556	4444	**90**
100	30	41	54	75	94	132	171	188	264	341	452	602	802	1084	1512	2050	2600	3200	4000	**100**
110	27	37	49	68	86	120	155	171	240	310	411	548	730	985	1375	1864	2364	2909	3636	**110**
120	25	34	45	62	78	110	142	157	220	284	376	502	669	903	1260	1708	2167	2667	3333	**120**
130	23	31	41	58	72	102	131	145	203	262	347	463	617	834	1163	1577	2000	2462	3077	**130**
140	21	29	38	54	67	94	122	134	189	244	323	430	573	774	1080	1464	1857	2286	2857	**140**
150	20	27	36	50	63	88	114	125	176	227	301	402	535	723	1008	1367	1733	2133	2667	**150**
160	18	26	34	47	59	83	107	118	165	213	282	376	502	677	945	1281	1625	2000	2500	**160**
170	17	24	32	44	55	78	100	111	156	201	266	354	472	638	890	1206	1529	1882	2353	**170**
180	16	23	30	42	52	73	95	105	147	190	251	335	446	602	840	1139	1444	1778	2222	**180**
190	16	21	28	39	50	70	90	99	139	180	238	317	422	570	796	1079	1368	1684	2105	**190**
200	15	20	27	37	47	66	85	94	132	171	226	301	401	542	756	1025	1300	1600	2000	**200**
210	14	19	26	36	45	63	81	90	126	162	215	287	382	516	720	976	1238	1524	1905	**210**
220	13	19	24	34	43	60	78	86	120	155	205	274	365	493	687	932	1182	1455	1818	**220**
230	13	18	23	33	41	57	74	82	115	148	196	262	349	471	657	891	1130	1391	1739	**230**
240	12	17	22	31	39	55	71	78	110	142	188	251	334	452	630	854	1083	1333	1667	**240**
250	12	16	21	30	38	53	68	75	106	136	181	241	321	434	605	820	1040	1280	1600	**250**
260	11	16	21	29	36	51	66	72	102	131	174	232	309	417	582	788	1000	1231	1538	**260**
270	11	15	20	28	35	49	63	70	98	126	167	223	297	401	560	759	963	1185	1481	**270**
280	11	15	19	27	34	47	61	67	94	122	161	215	287	387	540	732	929	1143	1429	**280**
290	10	14	19	26	32	46	59	65	91	118	156	208	277	374	521	707	897	1103	1379	**290**
300	10	14	18	25	31	44	57	63	88	114	151	201	267	361	504	683	867	1067	1333	**300**
310					30	43	55	61	85	110	146	194	259	350	488	661	839	1032	1290	**310**
320					29	41	53	59	83	107	141	188	251	339	473	641	813	1000	1250	**320**
330					29	40	52	57	80	103	137	183	243	328	458	621	788	970	1212	**330**
340					28	39	50	55	78	100	133	177	236	319	445	603	765	941	1176	**340**
350					27	38	49	54	76	97	129	172	229	310	432	586	743	914	1143	**350**
360					26	37	47	52	73	95	125	167	223	301	420	569	722	889	1111	**360**
370					25	36	46	51	71	92	122	163	217	293	409	554	703	865	1081	**370**
380					25	35	45	50	70	90	119	159	211	285	398	539	684	842	1053	**380**
390					24	34	44	48	68	87	116	154	206	278	388	526	667	821	1026	**390**
400					24	33	43	47	66	85	113	151	201	271	378	513	650	800	1000	**400**
410								46	65	83	110	147	196	264	369	500	634	780	976	**410**
420								45	63	81	108	143	191	258	360	488	619	762	952	**420**
430								44	62	79	105	140	187	252	352	477	605	744	930	**430**
440								43	60	78	103	137	182	246	344	466	591	727	909	**440**
450								42	59	76	100	134	178	241	336	456	578	711	889	**450**
460								41	57	74	98	131	174	236	329	446	565	696	870	**460**
470								40	56	73	96	128	171	231	322	436	553	681	851	**470**
480								39	55	71	94	125	167	226	315	427	542	667	833	**480**
490								38	54	70	92	123	164	221	309	418	531	653	816	**490**
500								38	53	68	90	120	160	217	302	410	520	640	800	**500**
510											89	118	157	213	297	402	510	627	784	**510**
520											87	116	154	208	291	394	500	615	769	**520**
530											85	114	151	204	285	387	491	604	755	**530**
540											84	112	149	201	280	380	481	593	741	**540**
550											82	110	146	197	275	373	473	582	727	**550**
560											81	108	143	194	270	366	464	571	714	**560**
570											79	106	141	190	265	360	456	561	702	**570**
580											78	104	138	187	261	353	448	552	690	**580**
590											77	102	136	184	256	347	441	542	678	**590**
600											75	100	134	181	252	342	433	533	667	**600**
610																336	426	525	656	**610**
620																331	419	516	645	**620**
630																325	413	508	635	**630**
640																320	406	500	625	**640**
650																315	400	492	615	**650**
660																311	394	485	606	**660**
670																306	388	478	597	**670**
680																301	382	471	588	**680**
690																297	377	464	580	**690**
700																293	371	457	571	**700**
710																289	366	451	563	**710**
720																285	361	444	556	**720**
730																281	356	438	548	**730**
740																277	351	432	541	**740**
750																273	347	427	533	**750**

SIZE	C1-1	C1-2	C1-3	C1-4	C2-5	C2-6	C2-7	C3-8	C3-9	C3-10	C4-11	C4-12	C4-13	C4-14	C4-15	C5-16	C5-17	C5-18	C5-19	

DO NOT SELECT TYPES **VS**, **VD** OR **VBM** ABOVE THE BLACK LINE.
DO NOT SELECT TYPES **HS** OR **VIS** BELOW THE RED LINE.
REMEMBER TO ADD OVERTRAVEL ALLOWANCE TO PIPE MOVEMENT BEFORE SELECTING SUPPORT SIZE.

CONSTANT SUPPORT SELECTION CHART (LOADS IN kgf)

SIZE TRAVEL	C6-20	C6-21	C6-22	C6-23	C7-24	C7-25	C7-26	C7-27	C7-28	C7-29	C8-30	C8-31	C8-32	C9-33	C9-34	TRAVEL
40																**40**
50																**50**
60																**60**
70																**70**
80	6500	8125														**80**
90	5778	7222	8889	11111	12500	16667										**90**
100	5200	6500	8000	10000	11250	15000										**100**
110	4727	5909	7273	9091	10227	13636	17045									**110**
120	4333	5417	6667	8333	9375	12500	15625	18750	22917							**120**
130	4000	5000	6154	7692	8654	11538	14423	17308	21154	25385						**130**
140	3714	4643	5714	7143	8036	10714	13393	16071	19643	23571						**140**
150	3467	4333	5333	6667	7500	10000	12500	15000	18333	22000	30000					**150**
160	3250	4063	5000	6250	7031	9375	11719	14063	17188	20625	28125	35156				**160**
170	3059	3824	4706	5882	6618	8824	11029	13235	16176	19412	26471	33088	39706	44118	52941	**170**
180	2889	3611	4444	5556	6250	8333	10417	12500	15278	18333	25000	31250	37500	41667	50000	**180**
190	2737	3421	4211	5263	5921	7895	9868	11842	14474	17368	23684	29605	35526	39474	47368	**190**
200	2600	3250	4000	5000	5625	7500	9375	11250	13750	16500	22500	28125	33750	37500	45000	**200**
210	2476	3095	3810	4762	5357	7143	8929	10714	13095	15714	21429	26786	32143	35714	42857	**210**
220	2364	2955	3636	4545	5114	6818	8523	10227	12500	15000	20455	25568	30682	34091	40909	**220**
230	2261	2826	3478	4348	4891	6522	8152	9783	11957	14348	19565	24457	29348	32609	39130	**230**
240	2167	2708	3333	4167	4688	6250	7813	9375	11458	13750	18750	23438	28125	31250	37500	**240**
250	2080	2600	3200	4000	4500	6000	7500	9000	11000	13200	18000	22500	27000	30000	36000	**250**
260	2000	2500	3077	3846	4327	5769	7212	8654	10577	12692	17308	21635	25962	28846	34615	**260**
270	1926	2407	2963	3704	4167	5556	6944	8333	10185	12222	16667	20833	25000	27778	33333	**270**
280	1857	2321	2857	3571	4018	5357	6696	8036	9821	11786	16071	20089	24107	26786	32143	**280**
290	1793	2241	2759	3448	3879	5172	6466	7759	9483	11379	15517	19397	23276	25862	31034	**290**
300	1733	2167	2667	3333	3750	5000	6250	7500	9167	11000	15000	18750	22500	25000	30000	**300**
310	1677	2097	2581	3226	3629	4839	6048	7258	8871	10645	14516	18145	21774	24194	29032	**310**
320	1625	2031	2500	3125	3516	4688	5859	7031	8594	10313	14063	17578	21094	23438	28125	**320**
330	1576	1970	2424	3030	3409	4545	5682	6818	8333	10000	13636	17045	20455	22727	27273	**330**
340	1529	1912	2353	2941	3309	4412	5515	6618	8088	9706	13235	16544	19853	22059	26471	**340**
350	1486	1857	2286	2857	3214	4286	5357	6429	7857	9429	12857	16071	19286	21429	25714	**350**
360	1444	1806	2222	2778	3125	4167	5208	6250	7639	9167	12500	15625	18750	20833	25000	**360**
370	1405	1757	2162	2703	3041	4054	5068	6081	7432	8919	12162	15203	18243	20270	24324	**370**
380	1368	1711	2105	2632	2961	3947	4934	5921	7237	8684	11842	14803	17763	19737	23684	**380**
390	1333	1667	2051	2564	2885	3846	4808	5769	7051	8462	11538	14423	17308	19231	23077	**390**
400	1300	1625	2000	2500	2813	3750	4688	5625	6875	8250	11250	14063	16875	18750	22500	**400**
410	1268	1585	1951	2439	2744	3659	4573	5488	6707	8049	10976	13720	16463	18293	21951	**410**
420	1238	1548	1905	2381	2679	3571	4464	5357	6548	7857	10714	13393	16071	17857	21429	**420**
430	1209	1512	1860	2326	2616	3488	4360	5233	6395	7674	10465	13081	15698	17442	20930	**430**
440	1182	1477	1818	2273	2557	3409	4261	5114	6250	7500	10227	12784	15341	17045	20455	**440**
450	1156	1444	1778	2222	2500	3333	4167	5000	6111	7333	10000	12500	15000	16667	20000	**450**
460	1130	1413	1739	2174	2446	3261	4076	4891	5978	7174	9783	12228	14674	16304	19565	**460**
470	1106	1383	1702	2128	2394	3191	3989	4787	5851	7021	9574	11968	14362	15957	19149	**470**
480	1083	1354	1667	2083	2344	3125	3906	4688	5729	6875	9375	11719	14063	15625	18750	**480**
490	1061	1327	1633	2041	2296	3061	3827	4592	5612	6735	9184	11480	13776	15306	18367	**490**
500	1040	1300	1600	2000	2250	3000	3750	4500	5500	6600	9000	11250	13500	15000	18000	**500**
510	1020	1275	1569	1961	2206	2941	3676	4412	5392	6471	8824	11029	13235	14706	17647	**510**
520	1000	1250	1538	1923	2163	2885	3606	4327	5288	6346	8654	10817	12981	14423	17308	**520**
530	981	1226	1509	1887	2123	2830	3538	4245	5189	6226	8491	10613	12736	14151	16981	**530**
540	963	1204	1481	1852	2083	2778	3472	4167	5093	6111	8333	10417	12500	13889	16667	**540**
550	945	1182	1455	1818	2045	2727	3409	4091	5000	6000	8182	10227	12273	13636	16364	**550**
560	929	1161	1429	1786	2009	2679	3348	4018	4911	5893	8036	10045	12054	13393	16071	**560**
570	912	1140	1404	1754	1974	2632	3289	3947	4825	5789	7895	9868	11842	13158	15789	**570**
580	897	1121	1379	1724	1940	2586	3233	3879	4741	5690	7759	9698	11638	12931	15517	**580**
590	881	1102	1356	1695	1907	2542	3178	3814	4661	5593	7627	9534	11441	12712	15254	**590**
600	867	1083	1333	1667	1875	2500	3125	3750	4583	5500	7500	9375	11250	12500	15000	**600**
610	852	1066	1311	1639	1844	2459	3074	3689	4508	5410	7377	9221	11066	12295	14754	**610**
620	839	1048	1290	1613	1815	2419	3024	3629	4435	5323	7258	9073	10887	12097	14516	**620**
630	825	1032	1270	1587	1786	2381	2976	3571	4365	5238	7143	8929	10714	11905	14286	**630**
640	813	1016	1250	1563	1758	2344	2930	3516	4297	5156	7031	8789	10547	11719	14063	**640**
650	800	1000	1231	1538	1731	2308	2885	3462	4231	5077	6923	8654	10385	11538	13846	**650**
660	788	985	1212	1515	1705	2273	2841	3409	4167	5000	6818	8523	10227	11364	13636	**660**
670	776	970	1194	1493	1679	2239	2799	3358	4104	4925	6716	8396	10075	11194	13433	**670**
680	765	956	1176	1471	1654	2206	2757	3309	4044	4853	6618	8272	9926	11029	13235	**680**
690	754	942	1159	1449	1630	2174	2717	3261	3986	4783	6522	8152	9783	10870	13043	**690**
700	743	929	1143	1429	1607	2143	2679	3214	3929	4714	6429	8036	9643	10714	12857	**700**
710	732	915	1127	1408	1585	2113	2641	3169	3873	4648	6338	7923	9507	10563	12676	**710**
720	722	903	1111	1389	1563	2083	2604	3125	3819	4583	6250	7813	9375	10417	12500	**720**
730	712	890	1096	1370	1541	2055	2568	3082	3767	4521	6164	7705	9247	10274	12329	**730**
740	703	878	1081	1351	1520	2027	2534	3041	3716	4459	6081	7601	9122	10135	12162	**740**
750	693	867	1067	1333	1500	2000	2500	3000	3667	4400	6000	7500	9000	10000	12000	**750**

SIZE	C6-20	C6-21	C6-22	C6-23	C7-24	C7-25	C7-26	C7-27	C7-28	C7-29	C8-30	C8-31	C8-32	C9-33	C9-34	

DO NOT SELECT TYPES **VS**, **VD** OR **VBM** ABOVE THE BLACK LINE.
DO NOT SELECT TYPES **HS** OR **VIS** BELOW THE RED LINE.
REMEMBER TO ADD OVERTRAVEL ALLOWANCE TO PIPE MOVEMENT BEFORE SELECTING SUPPORT SIZE.

C1: DIMENSIONS FOR SIZES C1–1 TO C1–4

MOVEMENT DEPENDENT DIMENSIONS

MOVEMENT PROVIDED mm		40–120	130–210	220–300
TRAVEL RANGE DEPENDENT DIMENSIONS	U	105	105	205
	TA	205	325	446
	TB	135	200	270
	TC	130	130	230
	TD	60	80	100
	TE	135	205	270
	TF	150	215	275
	TG	65	90	110
	TH	65	90	110
	TJ	100	100	128

TOP SUSPENSION DETAILS

DD	14
AA	30
BB	20
CC	50
EE	6
GG	20
LL	M12

FIXED DIMENSIONS

FA	155	FQ	75	XE	14
FB	85	FR	180	XF	190
FC	45	FS	180	XG	105
FD	25	FT	105	XH	55
FE	122	FU	35	XJ	150
FF	6	FV	140	XK	200
FG	35	FW	14	XL	14
FH	14	FX	60	XM	75
FJ	20	FY	80	XN	10
FK	180	FZ	180	XP	100
FL	140	XA	245	XQ	104
FM	6	XB	105	XR	100
FN	75	XC	100		
FP	40	XD	140		

SPRING SIZE DEPENDENT DIMENSIONS

	C1–1	C1–2	C1–3	C1–4
SA	132	150	162	184
SB	142	160	172	194
SC	180	200	210	235
SD	195	215	225	250
SE	195	215	225	250
SF	105	105	105	110

WEIGHTS (kgf)

	C1–1	C1–2	C1–3	C1–4
HS/HD	9	10	10	11
VS/VD	11	11	12	12
VIS/VID	11	11	11	12
HBMCS	11	11	12	12
HBM	9	9	10	10
VBM	10	10	10	11
VBMCS	13	13	13	14
VIBM	10	10	11	11

SINGLE POINT SUSPENSION DIMENSION 'V'

MOVEMENT PROVIDED mm	ALL SIZES		C1–1	C1–2	C1–3	C1–4
	V1	V3	V2	V2	V2	V2
40	41	45				
50	50	55				
60	59	65	58	61	63	65
70	68	74	66	70	73	75
80	76	82	74	78	82	85
90	83	91	81	86	90	94
100	91	99	88	94	99	103
110	98	107	94	102	107	112
120	106	114	100	109	115	121
130	TYPES HS AND VIS ARE NOT USED ABOVE 120mm TRAVEL		106	116	122	129
140			112	122	130	138
150			117	129	137	146
160			123	135	144	153
170			128	141	151	161
180			132	147	157	169
190			137	153	164	176
200			142	158	170	183
210			146	164	176	190
220			150	169	182	197
230			154	174	188	204
240			158	179	194	210
250			162	183	199	217
260			166	188	205	223
270			170	193	210	229
280			173	197	215	235
290			177	201	220	241
300			180	206	225	247

INSTALLED HEIGHT DIMENSIONS **J4** AND **J7** ALLOW ±25mm ADJUSTMENT.

TAKE-OUT DIMENSIONS **A1**, **A2**, **A3**, **J5**, **J6** AND **J8** ALLOW ±75mm ADJUSTMENT AND ASSUME USE OF A STANDARD F228A EYEBOLT.

WHERE SEVERE HEADROOM LIMITATIONS EXIST, DIMENSIONS **A1**, **A2** AND **A3** CAN BE REDUCED AND DIMENSIONS **J5**, **J6** AND **J8** INCREASED AS FOLLOWS BY USE OF A SHORTENED EYEBOLT:

ØX	M12
CHANGE mm	160

NOTE DIA. **X** IS THREADED ISO METRIC COARSE RIGHT HAND AS STANDARD.

NOTE THAT DIMENSIONS **A1**, **A2**, **A3**, **J4**, **J5**, **J6**, **J7** AND **J8** ARE GIVEN AT ZERO ROTATION, THAT IS WITH THE LEVER IN THE UPPERMOST POSITION.

N.B. DIMENSION **TA** IS THE MINIMUM FORWARD CLEARANCE REQUIRED.

C1: DIMENSIONS FOR SIZES C1-1 TO C1-4

MOVEMENT PROVIDED mm	ALL SIZES								C1-1				C1-2				C1-3				C1-4			
	ALL			HS HD	VS VD	HBMCS	HBM	VIBM		VIS VID	VBM	VBMCS		VIS VID	VBM	VBMCS		VIS VID	VBM	VBMCS		VIS VID	VBM	VBMCS
	C mm	D mm	E mm	A1 mm	A2 mm	J4 mm	J5 mm	J8 mm	ØX mm	A3 mm	J6 mm	J7 mm	ØX mm	A3 mm	J6 mm	J7 mm	ØX mm	A3 mm	J6 mm	J7 mm	ØX mm	A3 mm	J6 mm	J7 mm
		AT ZERO ROTATION								AT 0° ROTATION				AT 0° ROTATION				AT 0° ROTATION				AT 0° ROTATION		
40	54	44	31	479		307	-279	-279	M12	586		422	M12	604		442	M12	616		452	M12	638		477
50	67	55	38	472		314	-272	-272	M12	579		429	M12	597		449	M12	609		459	M12	631		484
60	80	66	46	464	464	322	-264	-264	M12	571	-134	437	M12	589	-114	457	M12	601	-104	467	M12	623	-79	492
70	94	77	54	456	456	330	-256	-256	M12	563	-126	445	M12	581	-106	465	M12	593	-96	475	M12	615	-71	500
80	107	88	61	449	449	337	-249	-249	M12	556	-119	452	M12	574	-99	472	M12	586	-89	482	M12	608	-64	507
90	120	99	69	441	441	345	-241	-241	M12	548	-111	460	M12	566	-91	480	M12	578	-81	490	M12	600	-56	515
100	134	110	77	433	433	353	-233	-233	M12	540	-103	468	M12	558	-83	488	M12	570	-73	498	M12	592	-48	523
110	147	121	84	426	426	360	-226	-226	M12	533	-96	475	M12	551	-76	495	M12	563	-66	505	M12	585	-41	530
120	161	132	92	418	418	368	-218	-218	M12	525	-88	483	M12	543	-68	503	M12	555	-58	513	M12	577	-33	538
130	174	143	100	475	480	396	-185	-185	M12	517	-80	491	M12	535	-60	511	M12	547	-50	521	M12	569	-25	546
140	187	153	107	468	473	403	-178	-178	M12	510	-73	498	M12	528	-53	518	M12	540	-43	528	M12	562	-18	553
150	201	164	115	460	465	411	-170	-170	M12	502	-65	506	M12	520	-45	526	M12	532	-35	536	M12	554	-10	561
160	214	175	123	452	457	419	-162	-162	M12	494	-57	514	M12	512	-37	534	M12	524	-27	544	M12	546	-2	569
170	228	186	130	445	450	426	-155	-155	M12	487	-50	521	M12	505	-30	541	M12	517	-20	551	M12	539	5	576
180	241	197	138	437	442	434	-147	-147	M12	479	-42	529	M12	497	-22	549	M12	509	-12	559	M12	531	13	584
190	254	208	146	429	434	442	-139	-139	M12	471	-34	537	M12	489	-14	557	M12	501	-4	567	M12	523	21	592
200	268	219	154	421	426	450	-131	-131	M12	463	-26	545	M12	481	-6	565	M12	493	4	575	M12	515	29	600
210	281	230	161	414	419	457	-124	-124	M12	456	-19	552	M12	474	1	572	M12	486	11	582	M12	508	36	607
220	294	241	169	476	476	485	-96	-96	M12	476	-11	560	M12	494	9	580	M12	506	19	590	M12	528	44	615
230	308	252	177	468	468	493	-88	-88	M12	468	-3	568	M12	486	17	588	M12	498	27	598	M12	520	52	623
240	321	263	184	461	461	500	-81	-81	M12	461	4	575	M12	479	24	595	M12	491	34	605	M12	513	59	630
250	335	274	192	453	453	508	-73	-73	M12	453	12	583	M12	471	32	603	M12	483	42	613	M12	505	67	638
260	348	285	200	445	445	516	-65	-65	M12	445	20	591	M12	463	40	611	M12	475	50	621	M12	497	75	646
270	361	296	207	438	438	523	-58	-58	M12	438	27	598	M12	456	47	618	M12	468	57	628	M12	490	82	653
280	375	307	215	430	430	531	-50	-50	M12	430	35	606	M12	448	55	626	M12	460	65	636	M12	482	90	661
290	388	318	223	422	422	539	-42	-42	M12	422	43	614	M12	440	63	634	M12	452	73	644	M12	474	98	669
300	401	329	230	415	415	546	-35	-35	M12	415	50	621	M12	433	70	641	M12	445	80	651	M12	467	105	676

C2: DIMENSIONS FOR SIZES C2–5 TO C2–7

MOVEMENT DEPENDENT DIMENSIONS

MOVEMENT PROVIDED mm		40–120	130–210	220–300	310–400
TRAVEL RANGE DEPENDENT DIMENSIONS	U	105	105	270	270
	TA	209	329	450	583
	TB	140	205	275	350
	TC	130	130	295	295
	TD	70	85	105	120
	TE	140	215	275	350
	TF	155	235	305	370
	TG	80	95	115	135
	TH	80	95	115	135
	TJ	120	120	120	168

FIXED DIMENSIONS

FA	200	FQ	75	XE	14
FB	85	FR	180	XF	190
FC	55	FS	180	XG	105
FD	25	FT	105	XH	55
FE	164	FU	35	XJ	150
FF	6	FV	140	XK	200
FG	35	FW	14	XL	14
FH	14	FX	70	XM	80
FJ	20	FY	90	XN	10
FK	180	FZ	180	XP	110
FL	140	XA	265	XQ	104
FM	6	XB	105	XR	120
FN	80	XC	120		
FP	50	XD	140		

SINGLE POINT SUSPENSION DIMENSION 'V'

MOVEMENT PROVIDED mm	ALL SIZES		C2–5	C2–6	C2–7
	V1	V3	V2	V2	V2
40	42	47			
50	52	58			
60	61	69			
70	71	78			
80	79	88	82	87	88
90	88	98	91	96	99
100	97	107	100	106	109
110	106	116	108	115	118
120	114	125	116	124	128
130	TYPES HS AND VIS ARE NOT USED ABOVE 120mm TRAVEL		124	133	138
140			131	142	147
150			139	151	156
160			146	159	165
170			153	167	174
180			160	175	182
190			167	183	191
200			173	191	199
210			180	199	208
220			186	206	216
230			192	214	224
240			198	221	232
250			203	228	240
260			209	235	247
270			215	242	255
280			220	249	262
290			225	255	270
300			230	262	277
310			235	268	284
320			240	274	291
330			245	281	298
340			250	287	305
350			255	293	311
360			259	298	318
370			264	304	324
380			268	310	331
390			272	316	337
400			277	321	343

TOP SUSPENSION DETAILS

DD	14
AA	30
BB	20
CC	50
EE	6
GG	20
LL	M12

SPRING SIZE DEPENDENT DIMENSIONS

	C2–5	C2–6	C2–7
SA	197	172	184
SB	207	182	194
SC	260	235	245
SD	275	250	260
SE	275	250	260
SF	130	130	130

WEIGHTS (kgf)

	C2–5	C2–6	C2–7
HS/HD	16	16	16
VS/VD	18	18	18
VIS/VID	19	19	19
HBMCS	18	18	18
HBM	16	16	16
VBM	17	17	17
VBMCS	20	20	20
VIBM	19	19	19

INSTALLED HEIGHT DIMENSIONS **J4** AND **J7** ALLOW ±25mm ADJUSTMENT.

TAKE-OUT DIMENSIONS **A1**, **A2**, **A3**, **J5**, **J6** AND **J8** ALLOW ±75mm ADJUSTMENT AND ASSUME USE OF A STANDARD F228A EYEBOLT.

WHERE SEVERE HEADROOM LIMITATIONS EXIST, DIMENSIONS **A1**, **A2** AND **A3** CAN BE REDUCED AND DIMENSIONS **J5**, **J6** AND **J8** INCREASED AS FOLLOWS BY USE OF A SHORTENED EYEBOLT:

ØX	M12
CHANGE mm	160

NOTE DIA. **X** IS THREADED ISO METRIC COARSE RIGHT HAND AS STANDARD.

NOTE THAT DIMENSIONS **A1**, **A2**, **A3**, **J4**, **J5**, **J6**, **J7** AND **J8** ARE GIVEN AT ZERO ROTATION, THAT IS WITH THE LEVER IN THE UPPERMOST POSITION.

N.B. DIMENSION **TA** IS THE MINIMUM FORWARD CLEARANCE REQUIRED.

C2: DIMENSIONS FOR SIZES C2–5 TO C2–7

MOVEMENT PROVIDED mm	ALL SIZES								C2–5				C2–6				C2–7			
	ALL			HS HD	VS VD	HBMCS	HBM	VIBM		VIS VID	VBM	VBMCS		VIS VID	VBM	VBMCS		VIS VID	VBM	VBMCS
	C mm	D mm	E mm	A1 mm	A2 mm	J4 mm	J5 mm	J8 mm	ØX mm	A3 mm	J6 mm	J7 mm	ØX mm	A3 mm	J6 mm	J7 mm	ØX mm	A3 mm	J6 mm	J7 mm
		AT ZERO ROTATION								AT 0° ROTATION				AT 0° ROTATION				AT 0° ROTATION		
40	54	44	31	484		333	-264	-264	M12	671		518	M12	646		493	M12	658		503
50	67	55	38	477		340	-257	-257	M12	664		525	M12	639		500	M12	651		510
60	80	66	46	469		348	-249	-249	M12	656		533	M12	631		508	M12	643		518
70	94	77	54	461		356	-241	-241	M12	648		541	M12	623		516	M12	635		526
80	107	88	61	454	454	363	-234	-234	M12	641	-39	548	M12	616	-64	523	M12	628	-54	533
90	120	99	69	446	446	371	-226	-226	M12	633	-31	556	M12	608	-56	531	M12	620	-46	541
100	134	110	77	438	438	379	-218	-218	M12	625	-23	564	M12	600	-48	539	M12	612	-38	549
110	147	121	84	431	431	386	-211	-211	M12	618	-16	571	M12	593	-41	546	M12	605	-31	556
120	161	132	92	423	423	394	-203	-203	M12	610	-8	579	M12	585	-33	554	M12	597	-23	564
130	174	143	100	480	490	411	-180	-180	M12	602	0	581	M12	577	-25	556	M12	589	-15	566
140	187	153	107	473	483	418	-173	-173	M12	595	7	588	M12	570	-18	563	M12	582	-8	573
150	201	164	115	465	475	426	-165	-165	M12	587	15	596	M12	562	-10	571	M12	574	0	581
160	214	175	123	457	467	434	-157	-157	M12	579	23	604	M12	554	-2	579	M12	566	8	589
170	228	186	130	450	460	441	-150	-150	M12	572	30	611	M12	547	5	586	M12	559	15	596
180	241	197	138	442	452	449	-142	-142	M12	564	38	619	M12	539	13	594	M12	551	23	604
190	254	208	146	434	444	457	-134	-134	M12	556	46	627	M12	531	21	602	M12	543	31	612
200	268	219	154	426	436	465	-126	-126	M12	548	54	635	M12	523	29	610	M12	535	39	620
210	281	230	161	419	429	472	-119	-119	M12	541	61	642	M12	516	36	617	M12	528	46	627
220	294	241	169	481	481	500	-91	-91	M12	533	69	650	M12	508	44	625	M12	520	54	635
230	308	252	177	473	473	508	-83	-83	M12	525	77	658	M12	500	52	633	M12	512	62	643
240	321	263	184	466	466	515	-76	-76	M12	518	84	665	M12	493	59	640	M12	505	69	650
250	335	274	192	458	458	523	-68	-68	M12	510	92	673	M12	485	67	648	M12	497	77	658
260	348	285	200	450	450	531	-60	-60	M12	502	100	681	M12	477	75	656	M12	489	85	666
270	361	296	207	443	443	538	-53	-53	M12	495	107	688	M12	470	82	663	M12	482	92	673
280	375	307	215	435	435	546	-45	-45	M12	487	115	696	M12	462	90	671	M12	474	100	681
290	388	318	223	427	427	554	-37	-37	M12	479	123	704	M12	454	98	679	M12	466	108	689
300	401	329	230	420	420	561	-30	-30	M12	472	130	711	M12	447	105	686	M12	459	115	696
310	415	340	238	487	487	584	-2	-2	M12	512	138	719	M12	487	113	694	M12	499	123	704
320	428	351	246	479	479	592	6	6	M12	504	146	727	M12	479	121	702	M12	491	131	712
330	442	362	253	472	472	599	13	13	M12	497	153	734	M12	472	128	709	M12	484	138	719
340	455	373	261	464	464	607	21	21	M12	489	161	742	M12	464	136	717	M12	476	146	727
350	468	384	269	456	456	615	29	29	M12	481	169	750	M12	456	144	725	M12	468	154	735
360	482	395	276	449	449	622	36	36	M12	474	176	757	M12	449	151	732	M12	461	161	742
370	495	406	284	441	441	630	44	44	M12	466	184	765	M12	441	159	740	M12	453	169	750
380	509	417	292	433	433	638	52	52	M12	458	192	773	M12	433	167	748	M12	445	177	758
390	522	428	299	426	426	645	59	59	M12	451	199	780	M12	426	174	755	M12	438	184	765
400	535	439	307	418	418	653	67	67	M12	443	207	788	M12	418	182	763	M12	430	192	773

C3: DIMENSIONS FOR SIZES C3–8 TO C3–10

MOVEMENT DEPENDENT DIMENSIONS

		MOVEMENT PROVIDED mm	40–120	130–210	220–300	310–400	410–500
TRAVEL RANGE DEPENDENT DIMENSIONS		U	120	120	270	270	270
		TA	213	306	454	587	721
		TB	155	195	280	355	430
		TC	145	145	295	295	295
		TD	80	90	110	125	145
		TE	155	195	280	355	430
		TF	155	225	315	390	455
		TG	90	100	120	140	165
		TH	90	100	120	140	165
		TJ	155	155	155	155	207
TOP SUSPENSION DETAILS	C3–8	DD	14	14	14	14	14
		AA	30	30	30	30	30
		BB	20	20	20	20	20
		CC	50	50	50	50	50
		EE	6	6	6	6	6
		GG	20	20	20	20	20
		LL	M12	M12	M12	M12	M12
	C3–9	DD	18	14	14	14	14
		AA	36	30	30	30	30
		BB	30	20	20	20	20
		CC	50	50	50	50	50
		EE	6	6	6	6	6
		GG	25	20	20	20	20
		LL	M16	M12	M12	M12	M12
	C3–10	DD	18	14	14	14	14
		AA	36	30	30	30	30
		BB	30	20	20	20	20
		CC	50	50	50	50	50
		EE	6	6	6	6	6
		GG	25	20	20	20	20
		LL	M16	M12	M12	M12	M12

FIXED DIMENSIONS

FA	250	FQ	75	XE	14
FB	89	FR	180	XF	220
FC	65	FS	195	XG	120
FD	50	FT	120	XH	90
FE	198	FU	35	XJ	180
FF	8	FV	140	XK	250
FG	35	FW	14	XL	14
FH	14	FX	85	XM	115
FJ	20	FY	120	XN	12
FK	180	FZ	220	XP	145
FL	140	XA	330	XQ	118
FM	8	XB	120	XR	155
FN	115	XC	170		
FP	60	XD	180		

SPRING SIZE DEPENDENT DIMENSIONS

	C3–8	C3–9	C3–10
SA	211	233	253
SB	223	245	265
SC	280	305	325
SD	300	325	345
SE	300	325	345
SF	175	175	180

WEIGHTS (kgf)

	C3–8	C3–9	C3–10
HS/HD	24	25	26
VS/VD	25	27	28
VIS/VID	27	28	30
HBMCS	27	28	30
HBM	23	24	26
VBM	24	25	27
VBMCS	29	30	32
VIBM	28	29	31

SINGLE POINT SUSPENSION DIMENSION 'V'

MOVEMENT PROVIDED mm	ALL SIZES		C3–8	C3–9	C3–10
	V1	V3	V2	V2	V2
40	43	48			
50	53	60			
60	63	71			
70	73	81	75	77	78
80	83	92	85	87	89
90	92	102	94	98	99
100	101	112	103	107	110
110	110	123	112	117	120
120	119	132	121	127	130
130	TYPES HS AND VIS ARE NOT USED ABOVE 120mm TRAVEL		130	136	139
140			139	145	149
150			147	155	159
160			155	163	168
170			163	172	177
180			171	181	187
190			179	190	196
200			186	198	204
210			193	206	213
220			201	214	222
230			208	222	231
240			215	230	239
250			222	238	247
260			228	246	256
270			235	253	264
280			242	261	272
290			248	268	280
300			254	275	287
310			260	282	295
320			266	290	303
330			272	296	310
340			278	303	318
350			284	310	325
360			290	317	333
370			295	323	340
380			301	330	347
390			306	336	354
400			311	343	361
410			317	349	368
420			322	355	375
430			327	361	381
440			332	367	388
450			337	373	395
460			342	379	401
470			346	385	407
480			351	390	414
490			356	396	420
500			360	401	426

INSTALLED HEIGHT DIMENSIONS **J4** AND **J7** ALLOW ±25mm ADJUSTMENT.

TAKE-OUT DIMENSIONS **A1**, **A2**, **A3**, **J5**, **J6** AND **J8** ALLOW ±75mm ADJUSTMENT AND ASSUME USE OF A STANDARD F228A EYEBOLT.

WHERE SEVERE HEADROOM LIMITATIONS EXIST, DIMENSIONS **A1**, **A2** AND **A3** CAN BE REDUCED AND DIMENSIONS **J5**, **J6** AND **J8** INCREASED AS FOLLOWS BY USE OF A SHORTENED EYEBOLT:

ØX	M12	M16
CHANGE mm	160	160

NOTE DIA. **X** IS THREADED ISO METRIC COARSE RIGHT HAND AS STANDARD.

NOTE THAT DIMENSIONS **A1**, **A2**, **A3**, **J4**, **J5**, **J6**, **J7** AND **J8** ARE GIVEN AT ZERO ROTATION, THAT IS WITH THE LEVER IN THE UPPERMOST POSITION.

N.B. DIMENSION **TA** IS THE MINIMUM FORWARD CLEARANCE REQUIRED.

C3: DIMENSIONS FOR SIZES C3–8 TO C3–10

MOVEMENT PROVIDED mm	ALL SIZES								C3–8				C3–9				C3–10			
	ALL			HS HD	VS VD	HBMCS	HBM	VIBM		VIS VID	VBM	VBMCS		VIS VID	VBM	VBMCS		VIS VID	VBM	VBMCS
	C mm	D mm	E mm	A1 mm	A2 mm	J4 mm	J5 mm	J8 mm	ØX mm	A3 mm	J6 mm	J7 mm	ØX mm	A3 mm	J6 mm	J7 mm	ØX mm	A3 mm	J6 mm	J7 mm
		AT ZERO ROTATION								AT 0° ROTATION				AT 0° ROTATION				AT 0° ROTATION		
40	54	44	31	499		387	-254	-254	M12	722		582	M16	744		607	M16	764		627
50	67	55	38	492		394	-247	-247	M12	715		589	M12	737		614	M16	757		634
60	80	66	46	484		402	-239	-239	M12	707		597	M12	729		622	M16	749		642
70	94	77	54	476	476	410	-231	-231	M12	699	-21	605	M12	721	4	630	M12	741	24	650
80	107	88	61	469	469	417	-224	-224	M12	692	-14	612	M12	714	11	637	M12	734	31	657
90	120	99	69	461	461	425	-216	-216	M12	684	-6	620	M12	706	19	645	M12	726	39	665
100	134	110	77	453	453	433	-208	-208	M12	676	2	628	M12	698	27	653	M12	718	47	673
110	147	121	84	446	446	440	-201	-201	M12	669	9	635	M12	691	34	660	M12	711	54	680
120	161	132	92	438	438	448	-193	-193	M12	661	17	643	M12	683	42	668	M12	703	62	688
130	174	143	100	470	470	462	-175	-175	M12	653	25	647	M12	675	50	672	M12	695	70	692
140	187	153	107	463	463	469	-168	-168	M12	646	32	654	M12	668	57	679	M12	688	77	699
150	201	164	115	455	455	477	-160	-160	M12	638	40	662	M12	660	65	687	M12	680	85	707
160	214	175	123	447	447	485	-152	-152	M12	630	48	670	M12	652	73	695	M12	672	93	715
170	228	186	130	440	440	492	-145	-145	M12	623	55	677	M12	645	80	702	M12	665	100	722
180	241	197	138	432	432	500	-137	-137	M12	615	63	685	M12	637	88	710	M12	657	108	730
190	254	208	146	424	424	508	-129	-129	M12	607	71	693	M12	629	96	718	M12	649	116	738
200	268	219	154	501	501	530	-101	-101	M12	599	79	695	M12	621	104	720	M12	641	124	740
210	281	230	161	494	494	537	-94	-94	M12	592	86	702	M12	614	111	727	M12	634	131	747
220	294	241	169	486	486	545	-86	-86	M12	584	94	710	M12	606	119	735	M12	626	139	755
230	308	252	177	478	478	553	-78	-78	M12	576	102	718	M12	598	127	743	M12	618	147	763
240	321	263	184	471	471	560	-71	-71	M12	569	109	725	M12	591	134	750	M12	611	154	770
250	335	274	192	463	463	568	-63	-63	M12	561	117	733	M12	583	142	758	M12	603	162	778
260	348	285	200	455	455	576	-55	-55	M12	553	125	741	M12	575	150	766	M12	595	170	786
270	361	296	207	448	448	583	-48	-48	M12	546	132	748	M12	568	157	773	M12	588	177	793
280	375	307	215	440	440	591	-40	-40	M12	538	140	756	M12	560	165	781	M12	580	185	801
290	388	318	223	432	432	599	-32	-32	M12	530	148	764	M12	552	173	789	M12	572	193	809
300	401	329	230	425	425	606	-25	-25	M12	523	155	771	M12	545	180	796	M12	565	200	816
310	415	340	238	492	492	629	3	3	M12	515	163	779	M12	537	188	804	M12	557	208	824
320	428	351	246	484	484	637	11	11	M12	507	171	787	M12	529	196	812	M12	549	216	832
330	442	362	253	477	477	644	18	18	M12	500	178	794	M12	522	203	819	M12	542	223	839
340	455	373	261	469	469	652	26	26	M12	492	186	802	M12	514	211	827	M12	534	231	847
350	468	384	269	461	461	660	34	34	M12	484	194	810	M12	506	219	835	M12	526	239	855
360	482	395	276	454	454	667	41	41	M12	477	201	817	M12	499	226	842	M12	519	246	862
370	495	406	284	446	446	675	49	49	M12	469	209	825	M12	491	234	850	M12	511	254	870
380	509	417	292	438	438	683	57	57	M12	461	217	833	M12	483	242	858	M12	503	262	878
390	522	428	299	431	431	690	64	64	M12	454	224	840	M12	476	249	865	M12	496	269	885
400	535	439	307	423	423	698	72	72	M12	446	232	848	M12	468	257	873	M12	488	277	893
410	549	449	315	490	490	726	105	105	M12	490	240	856	M12	512	265	881	M12	532	285	901
420	562	460	322	483	483	733	112	112	M12	483	247	863	M12	505	272	888	M12	525	292	908
430	575	471	330	475	475	741	120	120	M12	475	255	871	M12	497	280	896	M12	517	300	916
440	589	482	338	467	467	749	128	128	M12	467	263	879	M12	489	288	904	M12	509	308	924
450	602	493	345	460	460	756	135	135	M12	460	270	886	M12	482	295	911	M12	502	315	931
460	616	504	353	452	452	764	143	143	M12	452	278	894	M12	474	303	919	M12	494	323	939
470	629	515	361	444	444	772	151	151	M12	444	286	902	M12	466	311	927	M12	486	331	947
480	642	526	368	437	437	779	158	158	M12	437	293	909	M12	459	318	934	M12	479	338	954
490	656	537	376	429	429	787	166	166	M12	429	301	917	M12	451	326	942	M12	471	346	962
500	669	548	384	421	421	795	174	174	M12	421	309	925	M12	443	334	950	M12	463	354	970

C4: DIMENSIONS FOR SIZES C4–11 TO C4–15

MOVEMENT DEPENDENT DIMENSIONS

		MOVEMENT PROVIDED mm	40–80	90–160	170–220	230–300	310–400	410–500	510–600
TRAVEL RANGE DEPENDENT DIMENSIONS		U	155	155	155	155	345	345	345
		TA	188	291	368	470	599	727	855
		TB	200	200	235	295	365	435	510
		TC	205	205	205	205	370	370	370
		TD	115	115	115	130	145	165	180
		TE		200	255	315	375	435	510
		TF		230	280	345	425	505	580
		TG	130	130	130	145	160	180	195
		TH	130	130	130	145	160	180	195
		TJ	195	195	195	195	195	195	226
TOP SUSPENSION DETAILS	C4–11	DD	22	14	14	14	14	14	14
		AA	50	30	30	30	30	30	30
		BB	35	20	20	20	20	20	20
		CC	60	50	50	50	50	50	50
		EE	10	6	6	6	6	6	6
		GG	30	20	20	20	20	20	20
		LL	M20	M12	M12	M12	M12	M12	M12
	C4–12	DD	22	18	14	14	14	14	14
		AA	50	36	30	30	30	30	30
		BB	35	30	20	20	20	20	20
		CC	60	50	50	50	50	50	50
		EE	10	6	6	6	6	6	6
		GG	30	25	20	20	20	20	20
		LL	M20	M16	M12	M12	M12	M12	M12
	C4–13	DD	26	18	18	18	14	14	14
		AA	60	36	36	36	30	30	30
		BB	45	30	30	30	20	20	20
		CC	80	50	50	50	50	50	50
		EE	10	6	6	6	6	6	6
		GG	35	25	25	25	20	20	20
		LL	M24	M16	M16	M16	M12	M12	M12
	C4–14	DD	26	22	18	18	14	14	14
		AA	60	50	36	36	30	30	30
		BB	45	35	30	30	20	20	20
		CC	80	60	50	50	50	50	50
		EE	10	10	6	6	6	6	6
		GG	35	30	25	25	20	20	20
		LL	M24	M20	M16	M16	M12	M12	M12
	C4–15	DD	33	26	22	22	18	18	18
		AA	70	60	50	50	36	36	36
		BB	55	45	35	35	30	30	30
		CC	100	80	60	60	50	50	50
		EE	12	10	10	10	6	6	6
		GG	40	35	30	30	25	25	25
		LL	M30	M24	M20	M20	M16	M16	M16

FIXED DIMENSIONS

FA	330	FQ	100	XE	18
FB	115	FR	225	XF	270
FC	95	FS	240	XG	155
FD	51	FT	155	XH	110
FE	250	FU	35	XJ	220
FF	10	FV	175	XK	315
FG	35	FW	18	XL	18
FH	18	FX	105	XM	155
FJ	25	FY	160	XN	20
FK	225	FZ	300	XP	190
FL	175	XA	415	XQ	148
FM	10	XB	155	XR	195
FN	155	XC	210		
FP	90	XD	250		

SPRING SIZE DEPENDENT DIMENSIONS

	C4–11	C4–12	C4–13	C4–14	C4–15
SA	264	286	312	351	400
SB	284	306	332	371	420
SC	365	390	415	455	505
SD	385	410	435	475	525
SE	385	410	435	475	525
SF	210	210	215	215	220

WEIGHTS (kgf)

	C4–11	C4–12	C4–13	C4–14	C4–15
HS/HD	55	55	60	65	75
VS/VD	60	60	65	70	80
VIS/VID	60	65	70	75	80
HBMCS	60	65	70	75	80
HBM	50	55	60	65	70
VBM	55	55	60	65	75
VBMCS	65	70	75	80	85
VIBM	60	65	70	75	80

SINGLE POINT SUSPENSION DIMENSION 'V'

MOVEMENT PROVIDED mm	ALL SIZES		C4–11	C4–12	C4–13	C4–14	C4–15
	V1	V3	V2	V2	V2	V2	V2
40	43	48					
50	53	60					
60	63	71					
70	73	82					
80	82	93					
90	92	104	95				
100	101	114	104	107	110	112	113
110	111	124	113	117	120	122	124
120	120	135	122	126	130	133	135
130	129	145	131	136	139	143	145
140	138	155	140	145	149	153	156
150	147	165	148	154	159	163	166
160	155	174	156	163	168	173	176
170	TYPES HS AND VIS ARE NOT USED ABOVE 160mm TRAVEL		164	172	177	182	187
180			172	180	187	192	197
190			180	189	196	202	207
200			188	197	205	211	217
210			195	206	213	221	226
220			203	214	222	230	236
230			210	222	231	239	246
240			217	230	239	248	255
250			224	237	248	257	265
260			231	245	256	266	274
270			238	252	264	275	284
280			245	260	272	283	293
290			251	267	280	292	302
300			258	274	288	300	311
310			264	282	296	309	320
320			270	289	304	317	329
330			276	295	311	325	338
340			282	302	319	334	347
350			288	309	326	342	355
360			294	316	333	350	364
370			300	322	341	358	373
380			305	329	348	366	381
390			311	335	355	373	389
400			316	341	362	381	398
410			322	348	369	389	406
420			327	354	376	396	414
430			332	360	382	404	422
440			337	366	389	411	431
450			343	372	396	418	439
460			348	377	402	426	447
470			353	383	409	433	454
480			357	389	415	440	462
490			362	394	422	447	470
500			367	400	428	454	478
510			372	406	434	461	485
520			376	411	440	468	493
530			381	416	446	475	501
540			385	422	452	482	508
550			390	427	458	488	516
560			394	432	464	495	523
570			399	437	470	502	530
580			403	442	476	508	537
590			407	447	482	515	545
600			411	452	487	521	552

INSTALLED HEIGHT DIMENSIONS **J4** AND **J7** ALLOW ±25mm ADJUSTMENT.

TAKE-OUT DIMENSIONS **A1**, **A2**, **A3**, **J5**, **J6** AND **J8** ALLOW ±75mm ADJUSTMENT AND ASSUME USE OF A STANDARD F228A EYEBOLT.

WHERE SEVERE HEADROOM LIMITATIONS EXIST, DIMENSIONS **A1**, **A2** AND **A3** CAN BE REDUCED AND DIMENSIONS **J5**, **J6** AND **J8** INCREASED AS FOLLOWS BY USE OF A SHORTENED EYEBOLT:

ØX	M12	M16	M20	M24	M30
CHANGE mm	160	160	140	140	120

NOTE DIA. **X** IS THREADED ISO METRIC COARSE RIGHT HAND AS STANDARD.

NOTE THAT DIMENSIONS **A1**, **A2**, **A3**, **J4**, **J5**, **J6**, **J7** AND **J8** ARE GIVEN AT ZERO ROTATION, THAT IS WITH THE LEVER IN THE UPPERMOST POSITION.

N.B. DIMENSION **TA** IS THE MINIMUM FORWARD CLEARANCE REQUIRED.

C4: DIMENSIONS FOR SIZES C4–11 TO C4–15

MOVEMENT PROVIDED mm	ALL SIZES								C4–11				C4–12				C4–13				C4–14				C4–15			
	ALL			HS HD	VS VD	HBMCS	HBM	VIBM		VIS VID	VBM	VBMCS		VIS VID	VBM	VBMCS		VIS VID	VBM	VBMCS		VIS VID	VBM	VBMCS		VIS VID	VBM	VBMCS
	C mm	D mm	E mm	A1 mm	A2 mm	J4 mm	J5 mm	J8 mm	ØX mm	A3 mm	J6 mm	J7 mm	ØX mm	A3 mm	J6 mm	J7 mm	ØX mm	A3 mm	J6 mm	J7 mm	ØX mm	A3 mm	J6 mm	J7 mm	ØX mm	A3 mm	J6 mm	J7 mm
	AT ZERO ROTATION								AT 0° ROTATION				AT 0° ROTATION				AT 0° ROTATION				AT 0° ROTATION				AT 0° ROTATION			
40	54	44	31	544		495	-214	-214	M20	823		735	M20	845		760	M24	871		785								
50	67	55	38	537		502	-207	-207	M16	816		742	M20	838		767	M24	864		792	M24	903		832	M30	952		882
60	80	66	46	529		510	-199	-199	M16	808		750	M16	830		775	M20	856		800	M24	895		840	M30	944		890
70	94	77	54	521		518	-191	-191	M16	800		758	M16	822		783	M20	848		808	M20	887		848	M24	936		898
80	107	88	61	514		525	-184	-184	M16	793		765	M16	815		790	M16	841		815	M20	880		855	M24	929		905
90	120	99	69	506	506	526	-176	-176	M12	785	79	766	M16	807		791	M16	833		816	M20	872		856	M24	921		906
100	134	110	77	498	498	534	-168	-168	M12	777	87	774	M16	799	112	799	M16	825	137	824	M20	864	177	864	M20	913	227	914
110	147	121	84	491	491	541	-161	-161	M12	770	94	781	M16	792	119	806	M16	818	144	831	M16	857	184	871	M20	906	234	921
120	161	132	92	483	483	549	-153	-153	M12	762	102	789	M12	784	127	814	M16	810	152	839	M16	849	192	879	M20	898	242	929
130	174	143	100	475	475	557	-145	-145	M12	754	110	797	M12	776	135	822	M16	802	160	847	M16	841	200	887	M20	890	250	937
140	187	153	107	468	468	564	-138	-138	M12	747	117	804	M12	769	142	829	M16	795	167	854	M16	834	207	894	M20	883	257	944
150	201	164	115	460	460	572	-130	-130	M12	739	125	812	M12	761	150	837	M16	787	175	862	M16	826	215	902	M16	875	265	952
160	214	175	123	452	452	580	-122	-122	M12	731	133	820	M12	753	158	845	M12	779	183	870	M16	818	223	910	M16	867	273	960
170	228	186	130	480	500	580	-115	-115	M12	724	140	820	M12	746	165	845	M12	772	190	870	M16	811	230	910	M16	860	280	960
180	241	197	138	472	492	588	-107	-107	M12	716	148	828	M12	738	173	853	M12	764	198	878	M16	803	238	918	M16	852	288	968
190	254	208	146	464	484	596	-99	-99	M12	708	156	836	M12	730	181	861	M12	756	206	886	M16	795	246	926	M16	844	296	976
200	268	219	154	456	476	604	-91	-91	M12	700	164	844	M12	722	189	869	M12	748	214	894	M16	787	254	934	M16	836	304	984
210	281	230	161	449	469	611	-84	-84	M12	693	171	851	M12	715	196	876	M12	741	221	901	M12	780	261	941	M16	829	311	991
220	294	241	169	441	461	619	-76	-76	M12	685	179	859	M12	707	204	884	M12	733	229	909	M12	772	269	949	M16	821	319	999
230	308	252	177	493	513	642	-53	-53	M12	677	187	867	M12	699	212	892	M12	725	237	917	M12	764	277	957	M16	813	327	1007
240	321	263	184	486	506	649	-46	-46	M12	670	194	874	M12	692	219	899	M12	718	244	924	M12	757	284	964	M16	806	334	1014
250	335	274	192	478	498	657	-38	-38	M12	662	202	882	M12	684	227	907	M12	710	252	932	M12	749	292	972	M16	798	342	1022
260	348	285	200	470	490	665	-30	-30	M12	654	210	890	M12	676	235	915	M12	702	260	940	M12	741	300	980	M16	790	350	1030
270	361	296	207	463	483	672	-23	-23	M12	647	217	897	M12	669	242	922	M12	695	267	947	M12	734	307	987	M16	783	357	1037
280	375	307	215	455	475	680	-15	-15	M12	639	225	905	M12	661	250	930	M12	687	275	955	M12	726	315	995	M16	775	365	1045
290	388	318	223	447	467	688	-7	-7	M12	631	233	913	M12	653	258	938	M12	679	283	963	M12	718	323	1003	M12	767	373	1053
300	401	329	230	440	460	695	0	0	M12	624	240	920	M12	646	265	945	M12	672	290	970	M12	711	330	1010	M12	760	380	1060
310	415	340	238	502	512	718	23	23	M12	616	248	928	M12	638	273	953	M12	664	298	978	M12	703	338	1018	M12	752	388	1068
320	428	351	246	494	504	726	31	31	M12	608	256	936	M12	630	281	961	M12	656	306	986	M12	695	346	1026	M12	744	396	1076
330	442	362	253	487	497	733	38	38	M12	601	263	943	M12	623	288	968	M12	649	313	993	M12	688	353	1033	M12	737	403	1083
340	455	373	261	479	489	741	46	46	M12	593	271	951	M12	615	296	976	M12	641	321	1001	M12	680	361	1041	M12	729	411	1091
350	468	384	269	471	481	749	54	54	M12	585	279	959	M12	607	304	984	M12	633	329	1009	M12	672	369	1049	M12	721	419	1099
360	482	395	276	464	474	756	61	61	M12	578	286	966	M12	600	311	991	M12	626	336	1016	M12	665	376	1056	M12	714	426	1106
370	495	406	284	456	466	764	69	69	M12	570	294	974	M12	592	319	999	M12	618	344	1024	M12	657	384	1064	M12	706	434	1114
380	509	417	292	448	458	772	77	77	M12	562	302	982	M12	584	327	1007	M12	610	352	1032	M12	649	392	1072	M12	698	442	1122
390	522	428	299	441	451	779	84	84	M12	555	309	989	M12	577	334	1014	M12	603	359	1039	M12	642	399	1079	M12	691	449	1129
400	535	439	307	433	443	787	92	92	M12	547	317	997	M12	569	342	1022	M12	595	367	1047	M12	634	407	1087	M12	683	457	1137
410	549	449	315	495	495	812	120	120	M12	539	325	1002	M12	561	350	1027	M12	587	375	1052	M12	626	415	1092	M12	675	465	1142
420	562	460	322	488	488	819	127	127	M12	532	332	1009	M12	554	357	1034	M12	580	382	1059	M12	619	422	1099	M12	668	472	1149
430	575	471	330	480	480	827	135	135	M12	524	340	1017	M12	546	365	1042	M12	572	390	1067	M12	611	430	1107	M12	660	480	1157
440	589	482	338	472	472	835	143	143	M12	516	348	1025	M12	538	373	1050	M12	564	398	1075	M12	603	438	1115	M12	652	488	1165
450	602	493	345	465	465	842	150	150	M12	509	355	1032	M12	531	380	1057	M12	557	405	1082	M12	596	445	1122	M12	645	495	1172
460	616	504	353	457	457	850	158	158	M12	501	363	1040	M12	523	388	1065	M12	549	413	1090	M12	588	453	1130	M12	637	503	1180
470	629	515	361	449	449	858	166	166	M12	493	371	1048	M12	515	396	1073	M12	541	421	1098	M12	580	461	1138	M12	629	511	1188
480	642	526	368	442	442	865	173	173	M12	486	378	1055	M12	508	403	1080	M12	534	428	1105	M12	573	468	1145	M12	622	518	1195
490	656	537	376	434	434	873	181	181	M12	478	386	1063	M12	500	411	1088	M12	526	436	1113	M12	565	476	1153	M12	614	526	1203
500	669	548	384	426	426	881	189	189	M12	470	394	1071	M12	492	419	1096	M12	518	444	1121	M12	557	484	1161	M12	606	534	1211
510	683	559	391	494	494	903	211	211	M12	494	401	1078	M12	516	426	1103	M12	542	451	1128	M12	581	491	1168	M12	630	541	1218
520	696	570	399	486	486	911	219	219	M12	486	409	1086	M12	508	434	1111	M12	534	459	1136	M12	573	499	1176	M12	622	549	1226
530	709	581	407	478	478	919	227	227	M12	478	417	1094	M12	500	442	1119	M12	526	467	1144	M12	565	507	1184	M12	614	557	1234
540	723	592	415	470	470	927	235	235	M12	470	425	1102	M12	492	450	1127	M12	518	475	1152	M12	557	515	1192	M12	606	565	1242
550	736	603	422	463	463	934	242	242	M12	463	432	1109	M12	485	457	1134	M12	511	482	1159	M12	550	522	1199	M12	599	572	1249
560	749	614	430	455	455	942	250	250	M12	455	440	1117	M12	477	465	1142	M12	503	490	1167	M12	542	530	1207	M12	591	580	1257
570	763	625	438	447	447	950	258	258	M12	447	448	1125	M12	469	473	1150	M12	495	498	1175	M12	534	538	1215	M12	583	588	1265
580	776	636	445	440	440	957	265	265	M12	440	455	1132	M12	462	480	1157	M12	488	505	1182	M12	527	545	1222	M12	576	595	1272
590	790	647	453	432	432	965	273	273	M12	432	463	1140	M12	454	488	1165	M12	480	513	1190	M12	519	553	1230	M12	568	603	1280
600	803	658	461	424	424	973	281	281	M12	424	471	1148	M12	446	496	1173	M12	472	521	1198	M12	511	561	1238	M12	560	611	1288

C5: DIMENSIONS FOR SIZES C5–16 TO C5–19

MOVEMENT DEPENDENT DIMENSIONS

		MOVEMENT PROVIDED mm	60–100	110–170	180–240	250–330	340–400	410–500	510–600	610–750
TRAVEL RANGE DEPENDENT DIMENSIONS		U	235	235	235	235	235	450	450	450
		TA	218	310	401	519	610	741	872	1068
		TB	280	280	280	325	375	450	525	635
		TC	300	300	300	300	300	480	480	480
		TD	135	135	135	160	160	180	200	225
		TE	230	230	280	350	400	475	525	635
		TF	300	300	300	390	450	530	610	720
		TG	150	150	150	175	175	195	215	240
		TH	150	150	150	175	175	195	215	240
		TJ	255	255	255	255	255	255	255	255
TOP SUSPENSION DETAILS	C5–16	DD	33	26	22	22	22	22	22	22
		AA	70	60	50	50	50	50	50	50
		BB	55	45	35	35	35	35	35	35
		CC	100	80	60	60	60	60	60	60
		EE	12	10	10	10	10	10	10	10
		GG	40	35	30	30	30	30	30	30
		LL	M30	M24	M20	M20	M20	M20	M20	M20
	C5–17	DD	40	33	22	22	22	22	22	22
		AA	80	70	50	50	50	50	50	50
		BB	55	55	35	35	35	35	35	35
		CC	110	100	60	60	60	60	60	60
		EE	15	12	10	10	10	10	10	10
		GG	45	40	30	30	30	30	30	30
		LL	M36	M30	M20	M20	M20	M20	M20	M20
	C5–18	DD	40	33	26	26	26	22	22	22
		AA	80	70	60	60	60	50	50	50
		BB	55	55	45	45	45	35	35	35
		CC	110	100	80	80	80	60	60	60
		EE	15	12	10	10	10	10	10	10
		GG	45	40	35	35	35	30	30	30
		LL	M36	M30	M24	M24	M24	M20	M20	M20
	C5–19	DD	46	33	26	26	26	22	22	22
		AA	90	70	60	60	60	50	50	50
		BB	75	55	45	45	45	35	35	35
		CC	130	100	80	80	80	60	60	60
		EE	15	12	10	10	10	10	10	10
		GG	60	40	35	35	35	10	10	10
		LL	M42	M30	M24	M24	M24	M20	M20	M20

FIXED DIMENSIONS

FA	410	FQ	120	XE	22
FB	141	FR	265	XF	320
FC	110	FS	360	XG	235
FD	92	FT	235	XH	170
FE	319	FU	65	XJ	260
FF	12	FV	205	XK	465
FG	65	FW	22	XL	22
FH	22	FX	140	XM	215
FJ	30	FY	190	XN	25
FK	265	FZ	380	XP	265
FL	205	XA	600	XQ	182
FM	15	XB	235	XR	255
FN	215	XC	305		
FP	100	XD	320		

SPRING SIZE DEPENDENT DIMENSIONS

	C5–16	C5–17	C5–18	C5–19
SA	472	519	538	583
SB	497	544	563	608
SC	590	635	655	700
SD	615	660	680	725
SE	615	660	680	725
SF	305	310	310	315

WEIGHTS (kgf)

	C5–16	C5–17	C5–18	C5–19
HS/HD	120	130	140	150
VS/VD	130	140	150	160
VIS/VID	135	145	155	165
HBMCS	135	145	155	165
HBM	120	130	135	150
VBM	125	135	140	155
VBMCS	145	160	165	175
VIBM	130	140	150	160

SINGLE POINT SUSPENSION DIMENSION 'V'

MOVEMENT PROVIDED mm	ALL SIZES		C5–16	C5–17	C5–18	C5–19
	V1	V3	V2	V2	V2	V2
60	64	73				
70	75	85				
80	86	96				
90	96	107				
100	105	119	110			
110	116	130	121	122	124	125
120	126	141	131	133	134	136
130	135	152	141	143	145	146
140	145	163	151	153	155	157
150	155	174	161	163	166	168
160	164	184	171	173	176	178
170	174	195	180	183	186	189
180	183	205	190	193	197	199
190	193	216	200	203	207	209
200	202	226	209	213	217	220
210	211	236	218	222	227	230
220	220	246	227	232	236	240
230	229	256	237	241	246	250
240	238	266	246	251	256	260
250	TYPES HS AND VIS ARE NOT USED ABOVE 240mm TRAVEL		254	260	265	270
260			263	269	275	279
270			272	278	284	289
280			281	287	294	299
290			289	296	303	309
300			298	305	312	318
310			306	314	322	328
320			314	322	331	337
330			323	331	340	346
340			331	340	349	356
350			339	348	357	365
360			347	356	366	374
370			355	365	375	383
380			363	373	384	392
390			370	381	392	401
400			378	389	401	410
410			386	397	409	419
420			393	405	418	428
430			401	413	426	436
440			408	421	435	445
450			415	429	443	454
460			423	437	451	462
470			430	444	459	471
480			437	452	467	479
490			444	460	475	488
500			451	467	483	496
510			458	474	491	505
520			465	482	499	513
530			472	489	507	521
540			479	496	515	529
550			485	504	522	537
560			492	511	530	545
570			499	518	538	553
580			505	525	545	561
590			512	532	553	569
600			518	539	560	577
610			525	546	567	585
620			531	553	575	593
630			537	559	582	600
640			544	566	589	608
650			550	573	597	616
660			556	579	604	623
670			562	586	611	631
680			568	592	618	638
690			574	599	625	646
700			580	605	632	653
710			586	612	639	661
720			592	618	646	668
730			597	624	652	675
740			603	631	659	682
750			609	637	666	690

INSTALLED HEIGHT DIMENSIONS **J4** AND **J7** ALLOW ±25mm ADJUSTMENT.

TAKE-OUT DIMENSIONS **A1**, **A2**, **A3**, **J5**, **J6** AND **J8** ALLOW ±75mm ADJUSTMENT AND ASSUME USE OF A STANDARD F228A EYEBOLT.

WHERE SEVERE HEADROOM LIMITATIONS EXIST, DIMENSIONS **A1**, **A2** AND **A3** CAN BE REDUCED AND DIMENSIONS **J5**, **J6** AND **J8** INCREASED AS FOLLOWS BY USE OF A SHORTENED EYEBOLT:

ØX	M12	M16	M20	M24	M30	M36	M42
CHANGE mm	160	160	140	140	120	100	80

NOTE DIA. **X** IS THREADED ISO METRIC COARSE RIGHT HAND AS STANDARD.

NOTE THAT DIMENSIONS **A1**, **A2**, **A3**, **J4**, **J5**, **J6**, **J7** AND **J8** ARE GIVEN AT ZERO ROTATION, THAT IS WITH THE LEVER IN THE UPPERMOST POSITION.

N.B. DIMENSION **TA** IS THE MINIMUM FORWARD CLEARANCE REQUIRED.

C5: DIMENSIONS FOR SIZES C5–16 TO C5–19

MOVEMENT PROVIDED mm	ALL SIZES								C5–16				C5–17				C5–18				C5–19			
	ALL			HS HD	VS VD	HBMCS	HBM	VIBM		VIS VID	VBM	VBMCS		VIS VID	VBM	VBMCS		VIS VID	VBM	VBMCS		VIS VID	VBM	VBMCS
	C mm	D mm	E mm	A1 mm	A2 mm	J4 mm	J5 mm	J8 mm	ØX mm	A3 mm	J6 mm	J7 mm	ØX mm	A3 mm	J6 mm	J7 mm	ØX mm	A3 mm	J6 mm	J7 mm	ØX mm	A3 mm	J6 mm	J7 mm
	AT ZERO ROTATION									AT 0° ROTATION				AT 0° ROTATION				AT 0° ROTATION				AT 0° ROTATION		
60	80	66	46	609		625	-179	-179	M30	1081		1030	M36	1128		1075								
70	94	77	54	601		633	-171	-171	M30	1073		1038	M36	1120		1083	M36	1139		1103	M42	1184		1148
80	107	88	61	594		640	-164	-164	M30	1066		1045	M30	1113		1090	M36	1132		1110	M36	1177		1155
90	120	99	69	586		648	-156	-156	M24	1058		1053	M30	1105		1098	M30	1124		1118	M36	1169		1163
100	134	110	77	578	528	656	-148	-148	M24	1050	317	1061	M30	1097		1106	M30	1116		1126	M36	1161		1171
110	147	121	84	571	521	663	-141	-141	M24	1043	324	1068	M30	1090	369	1113	M30	1109	389	1133	M30	1154	434	1178
120	161	132	92	563	513	671	-133	-133	M24	1035	332	1076	M24	1082	377	1121	M30	1101	397	1141	M30	1146	442	1186
130	174	143	100	555	505	679	-125	-125	M20	1027	340	1084	M24	1074	385	1129	M30	1093	405	1149	M30	1138	450	1194
140	187	153	107	548	498	686	-118	-118	M20	1020	347	1091	M24	1067	392	1136	M30	1086	412	1156	M30	1131	457	1201
150	201	164	115	540	490	694	-110	-110	M20	1012	355	1099	M24	1059	400	1144	M24	1078	420	1164	M30	1123	465	1209
160	214	175	123	532	482	702	-102	-102	M20	1004	363	1107	M24	1051	408	1152	M24	1070	428	1172	M30	1115	473	1217
170	228	186	130	525	475	709	-95	-95	M20	997	370	1114	M20	1044	415	1159	M24	1063	435	1179	M30	1108	480	1224
180	241	197	138	517	517	706	-87	-87	M20	989	378	111	M20	1036	423	1156	M24	1055	443	1176	M24	1100	488	1221
190	254	208	146	509	509	714	-79	-79	M20	981	386	1119	M20	1028	431	1164	M24	1047	451	1184	M24	1092	496	1229
200	268	219	154	501	501	722	-71	-71	M20	973	394	1127	M20	1020	439	1172	M24	1039	459	1192	M24	1084	504	1237
210	281	230	161	494	494	729	-64	-64	M16	966	401	1134	M20	1013	446	1179	M20	1032	466	1199	M24	1077	511	1244
220	294	241	169	486	486	737	-56	-56	M16	958	409	1142	M20	1005	454	1187	M20	1024	474	1207	M24	1069	519	1252
230	308	252	177	478	478	745	-48	-48	M16	950	417	1150	M20	997	462	1195	M20	1016	482	1215	M24	1061	527	1260
240	321	263	184	471	471	752	-41	-41	M16	943	424	1157	M20	990	469	1202	M20	1009	489	1222	M24	1054	534	1267
250	335	274	192	508	533	785	-8	-8	M16	935	432	1165	M20	982	477	1210	M20	1001	497	1230	M24	1046	542	1275
260	348	285	200	500	525	793	0	0	M16	927	440	1173	M16	974	485	1218	M20	993	505	1238	M20	1038	550	1283
270	361	296	207	493	518	800	7	7	M16	920	447	1180	M16	967	492	1225	M20	986	512	1245	M20	1031	557	1290
280	375	307	215	485	510	808	15	15	M16	912	455	1188	M16	959	500	1233	M20	978	520	1253	M20	1023	565	1298
290	388	318	223	477	502	816	23	23	M16	904	463	1196	M16	951	508	1241	M20	970	528	1261	M20	1015	573	1306
300	401	329	230	470	495	823	30	30	M16	897	470	1203	M16	944	515	1248	M20	963	535	1268	M20	1008	580	1313
310	415	340	238	462	487	831	38	38	M16	889	478	1211	M16	936	523	1256	M20	955	543	1276	M20	1000	588	1321
320	428	351	246	454	479	839	46	46	M16	881	486	1219	M16	928	531	1264	M16	947	551	1284	M20	992	596	1329
330	442	362	253	447	472	846	53	53	M16	874	493	1226	M16	921	538	1271	M16	940	558	1291	M20	985	603	1336
340	455	373	261	489	514	845	61	61	M16	866	501	1225	M16	913	546	1270	M16	932	566	1290	M20	977	611	1335
350	468	384	269	481	506	853	69	69	M16	858	509	1233	M16	905	554	1278	M16	924	574	1298	M20	969	619	1343
360	482	395	276	474	499	860	76	76	M16	851	516	1240	M16	898	561	1285	M16	917	581	1305	M20	962	626	1350
370	495	406	284	466	491	868	84	84	M16	843	524	1248	M16	890	569	1293	M16	909	589	1313	M20	954	634	1358
380	509	417	292	458	483	876	92	92	M16	835	532	1256	M16	882	577	1301	M16	901	597	1321	M20	946	642	1366
390	522	428	299	451	476	883	99	99	M12	828	539	1263	M16	875	584	1308	M16	894	604	1328	M20	939	649	1373
400	535	439	307	443	468	891	107	107	M12	820	547	1271	M16	867	592	1316	M16	886	612	1336	M16	931	657	1381
410	549	449	315	510	535	919	135	135	M12	812	555	1279	M16	859	600	1324	M16	878	620	1344	M16	923	665	1389
420	562	460	322	503	528	926	142	142	M12	805	562	1286	M16	852	607	1331	M16	871	627	1351	M16	916	672	1396
430	575	471	330	495	520	934	150	150	M12	797	570	1294	M16	844	615	1339	M16	863	635	1359	M16	908	680	1404
440	589	482	338	487	512	942	158	158	M12	789	578	1302	M16	836	623	1347	M16	855	643	1367	M16	900	688	1412
450	602	493	345	480	505	949	165	165	M12	782	585	1309	M16	829	630	1354	M16	848	650	1374	M16	893	695	1419
460	616	504	353	472	497	957	173	173	M12	774	593	1317	M16	821	638	1362	M16	840	658	1382	M16	885	703	1427
470	629	515	361	464	489	965	181	181	M12	766	601	1325	M16	813	646	1370	M16	832	666	1390	M16	877	711	1435
480	642	526	368	457	482	972	188	188	M12	759	608	1332	M16	806	653	1377	M16	825	673	1397	M16	870	718	1442
490	656	537	376	449	474	980	196	196	M12	751	616	1340	M16	798	661	1385	M16	817	681	1405	M16	862	726	1450
500	669	548	384	441	466	988	204	204	M12	743	624	1348	M12	790	669	1393	M16	809	689	1413	M16	854	734	1458
510	683	559	391	509	509	1015	231	231	M12	736	631	1355	M12	783	676	1400	M16	802	696	1420	M16	847	741	1465
520	696	570	399	501	501	1023	239	239	M12	728	639	1363	M12	775	684	1408	M16	794	704	1428	M16	839	749	1473
530	709	581	407	493	493	1031	247	247	M12	720	647	1371	M12	767	692	1416	M16	786	712	1436	M16	831	757	1481
540	723	592	415	485	485	1039	255	255	M12	712	655	1379	M12	759	700	1424	M16	778	720	1444	M16	823	765	1489
550	736	603	422	478	478	1046	262	262	M12	705	662	1386	M12	752	707	1431	M16	771	727	1451	M16	816	772	1496
560	749	614	430	470	470	1054	270	270	M12	697	670	1394	M12	744	715	1439	M16	763	735	1459	M16	808	780	1504
570	763	625	438	462	462	1062	278	278	M12	689	678	1402	M12	736	723	1447	M16	755	743	1467	M16	800	788	1512
580	776	636	445	455	455	1069	285	285	M12	682	685	1409	M12	729	730	1454	M16	748	750	1474	M16	793	795	1519
590	790	647	453	447	447	1077	293	293	M12	674	693	1417	M12	721	738	1462	M16	740	758	1482	M16	785	803	1527
600	803	658	461	439	439	1085	301	301	M12	666	701	1425	M12	713	746	1470	M16	732	766	1490	M16	777	811	1535
610	816	669	468	542	542	1117	333	333	M12	659	708	1432	M12	706	753	1477	M12	725	773	1497	M16	770	818	1542
620	830	680	476	534	534	1125	341	341	M12	651	716	1440	M12	698	761	1485	M12	717	781	1505	M16	762	826	1550
630	843	691	484	526	526	1133	349	349	M12	643	724	1448	M12	690	769	1493	M12	709	789	1513	M16	754	834	1558
640	857	702	491	519	519	1140	356	356	M12	636	731	1455	M12	683	776	1500	M12	702	796	1520	M16	747	841	1565
650	870	713	499	511	511	1148	364	364	M12	628	739	1463	M12	675	784	1508	M12	694	804	1528	M16	739	849	1573
660	883	724	507	503	503	1156	372	372	M12	620	747	1471	M12	667	792	1516	M12	686	812	1536	M16	731	857	1581
670	897	734	514	496	496	1163	379	379	M12	613	754	1478	M12	660	799	1523	M12	679	819	1543	M16	724	864	1588
680	910	745	522	488	488	1171	387	387	M12	605	762	1486	M12	652	807	1531	M12	671	827	1551	M16	716	872	1596
690	923	756	530	480	480	1179	395	395	M12	597	770	1494	M12	644	815	1539	M12	663	835	1559	M16	708	880	1604
700	937	767	537	473	473	1186	402	402	M12	590	777	1501	M12	637	822	1546	M12	656	842	1566	M16	701	887	1611
710	950	778	545	465	465	1194	410	410	M12	582	785	1509	M12	629	830	1554	M12	648	850	1574	M16	693	895	1619
720	964	789	553	457	457	1202	418	418	M12	574	793	1517	M12	621	838	1562	M12	640	858	1582	M16	685	903	1627
730	977	800	560	450	450	1209	425	425	M12	567	800	1524	M12	614	845	1569	M12	633	865	1589	M16	678	910	1634
740	990	811	568	442	442	1217	433	433	M12	559	808	1532	M12	606	853	1577	M12	625	873	1597	M16	670	918	1642
750	1004	822	576	434	434	1225	441	441	M12	551	816	1540	M12	598	861	1585	M12	617	881	1605	M16	662	926	1650

C6: DIMENSIONS FOR SIZES C6–20 TO C6–23

MOVEMENT DEPENDENT DIMENSIONS

		MOVEMENT PROVIDED mm	80–130	140–210	220–300	310–410	420–500	510–600	610–750
TRAVEL RANGE DEPENDENT DIMENSIONS		U	290	290	290	290	400	400	400
		TA	276	379	496	639	756	886	1080
		TB	355	355	355	395	460	535	645
		TC	380	380	380	380	450	450	450
		TD	190	190	190	210	210	230	250
		TE	295	295	355	435	500	575	645
		TF	380	380	380	475	550	630	745
		TG	205	205	205	225	225	240	265
		TH	205	205	205	225	225	240	265
		TJ	305	305	305	305	305	305	305
TOP SUSPENSION DETAILS	C6–20	DD	46	40	33	33	33	33	33
		AA	90	80	70	70	70	70	70
		BB	75	55	55	55	55	55	55
		CC	130	110	100	100	100	100	100
		EE	15	15	12	12	12	12	12
		GG	60	45	40	40	40	40	40
		LL	M42	M36	M30	M30	M30	M30	M30
	C6–21	DD	52	40	33	33	33	33	33
		AA	105	80	70	70	70	70	70
		BB	85	55	55	55	55	55	55
		CC	150	110	100	100	100	100	100
		EE	20	15	12	12	12	12	12
		GG	70	45	40	40	40	40	40
		LL	M48	M36	M30	M30	M30	M30	M30
	C6–22	DD	52	46	40	33	33	33	33
		AA	105	90	80	70	70	70	70
		BB	85	75	55	55	55	55	55
		CC	150	130	110	100	100	100	100
		EE	20	15	15	12	12	12	12
		GG	70	60	45	40	40	40	40
		LL	M48	M42	M36	M30	M30	M30	M30
	C6–23	DD	60	46	40	40	33	33	33
		AA	120	90	80	80	70	70	70
		BB	100	75	55	55	55	55	55
		CC	180	130	110	110	100	100	100
		EE	20	15	15	15	12	12	12
		GG	75	60	45	45	40	40	40
		LL	M56	M42	M36	M36	M30	M30	M30

FIXED DIMENSIONS

FA	520	FQ	150	XE	33
FB	177	FR	355	XF	430
FC	160	FS	455	XG	290
FD	111	FT	290	XH	210
FE	394	FU	75	XJ	340
FF	15	FV	265	XK	590
FG	75	FW	33	XL	33
FH	33	FX	200	XM	280
FJ	45	FY	260	XN	40
FK	355	FZ	490	XP	345
FL	265	XA	760	XQ	228
FM	20	XB	290	XR	305
FN	280	XC	380		
FP	150	XD	400		

SPRING SIZE DEPENDENT DIMENSIONS

	C6–20	C6–21	C6–22	C6–23
SA	662	735	782	848
SB	702	775	822	888
SC	830	900	950	1015
SD	855	925	975	1040
SE	855	925	975	1040
SF	380	385	390	395

WEIGHTS (kgf)

	C6–20	C6–21	C6–22	C6–23
HS/HD	270	300	330	370
VS/VD	290	320	350	380
VIS/VID	300	330	360	390
HBMCS	300	330	360	390
HBM	260	290	320	360
VBM	280	310	340	370
VBMCS	320	350	380	410
VIBM	290	320	340	380

SINGLE POINT SUSPENSION DIMENSION 'V'

MOVEMENT PROVIDED mm	ALL SIZES		C6–20	C6–21	C6–22	C6–23
	V1	V3	V2	V2	V2	V2
80	83	97				
90	93	108				
100	103	120				
110	112	131				
120	122	142				
130	132	153	142	143		
140	141	164	152	153	155	156
150	151	175	162	164	165	167
160	160	186	172	174	176	177
170	170	197	182	184	186	188
180	179	208	192	194	196	198
190	188	218	201	204	206	208
200	197	228	211	214	216	219
210	206	239	220	223	226	229
220	215	249	230	233	236	239
230	224	259	239	243	246	249
240	233	270	248	252	256	259
250	241	279	258	262	265	269
260	250	289	267	271	275	279
270	259	299	276	280	284	288
280	267	309	285	289	294	298
290	275	319	293	298	303	308
300	284	328	302	307	312	317
310	TYPES HS AND VIS ARE NOT USED ABOVE 300mm TRAVEL		311	316	322	327
320			319	325	331	336
330			328	334	340	346
340			336	343	349	355
350			345	352	358	364
360			353	360	367	373
370			361	369	376	382
380			369	377	384	392
390			378	386	393	401
400			386	394	402	410
410			394	402	410	418
420			401	410	419	427
430			409	419	427	436
440			417	427	436	445
450			425	435	444	453
460			432	443	452	462
470			440	451	461	471
480			447	459	469	479
490			455	466	477	488
500			462	474	485	496
510			470	482	493	505
520			477	489	501	513
530			484	497	509	521
540			491	505	517	529
550			498	512	525	538
560			505	519	532	546
570			512	527	540	554
580			519	534	548	562
590			526	541	555	570
600			533	549	563	578
610			540	556	571	586
620			547	563	578	593
630			553	570	585	601
640			560	577	593	609
650			566	584	600	617
660			573	591	607	624
670			579	598	615	632
680			586	604	622	639
690			592	611	629	647
700			599	618	636	655
710			605	625	643	662
720			611	631	650	669
730			617	638	657	677
740			624	644	664	684
750			630	651	671	691

INSTALLED HEIGHT DIMENSIONS **J4** AND **J7** ALLOW ±25mm ADJUSTMENT.

TAKE-OUT DIMENSIONS **A1**, **A2**, **A3**, **J5**, **J6** AND **J8** ALLOW ±75mm ADJUSTMENT AND ASSUME USE OF A STANDARD F228A EYEBOLT.

WHERE SEVERE HEADROOM LIMITATIONS EXIST, DIMENSIONS **A1**, **A2** AND **A3** CAN BE REDUCED AND DIMENSIONS **J5**, **J6** AND **J8** INCREASED AS FOLLOWS BY USE OF A SHORTENED EYEBOLT:

ØX	M16	M20	M24	M30	M36	M42	M48	M56
CHANGE mm	160	140	140	120	100	80	NIL	NIL

NOTE DIA. **X** IS THREADED ISO METRIC COARSE RIGHT HAND AS STANDARD.

NOTE THAT DIMENSIONS **A1**, **A2**, **A3**, **J4**, **J5**, **J6**, **J7** AND **J8** ARE GIVEN AT ZERO ROTATION, THAT IS WITH THE LEVER IN THE UPPERMOST POSITION.

N.B. DIMENSION **TA** IS THE MINIMUM FORWARD CLEARANCE REQUIRED.

C6: DIMENSIONS FOR SIZES C6–20 TO C6–23

MOVEMENT PROVIDED mm	ALL SIZES				C6–20							C6–21							C6–22							C6–23						
	ALL			HBMCS		HS HD	VS VD	VIS VID	VBM	VBMCS	HBM/VIBM		HS HD	VS VD	VIS VID	VBM	VBMCS	HBM/VIBM		HS HD	VS VD	VIS VID	VBM	VBMCS	HBM/VIBM		HS HD	VS VD	VIS VID	VBM	VBMCS	HBM/VIBM
	C mm	D mm	E mm	J4 mm	ØX mm	A1 mm	A2 mm	A3 mm	J6 mm	J7 mm	J5/J8 mm	ØX mm	A1 mm	A2 mm	A3 mm	J6 mm	J7 mm	J5/J8 mm	ØX mm	A1 mm	A2 mm	A3 mm	J6 mm	J7 mm	J5/J8 mm	ØX mm	A1 mm	A2 mm	A3 mm	J6 mm	J7 mm	J5/J8 mm
	AT 0° ROTATION				AT ZERO ROTATION							AT ZERO ROTATION							AT ZERO ROTATION							AT ZERO ROTATION						
80	107	88	61	820	M42	669		1321		1400	-109	M48	709		1434		1470	-149														
90	120	99	69	823	M42	661		1313		1408	-101	M42	661		1386		1478	-101	M48	701		1473		1528	-141	M56	716		1554		1593	-156
100	134	110	77	836	M36	653		1305		1416	-93	M42	653		1378		1486	-93	M48	693		1465		1536	-133	M56	708		1546		1601	-148
110	147	121	84	843	M36	646		1298		1423	-86	M42	646		1371		1493	-86	M42	646		1418		1543	-86	M48	686		1524		1608	-126
120	161	132	92	851	M36	638		1290		1431	-78	M42	638		1363		1501	-78	M42	638		1410		1551	-78	M48	678		1516		1616	-118
130	174	143	100	859	M36	630	570	1282	580	1439	-70	M36	630	570	1355	650	1509	-70	M42	630		1402		1559	-70	M48	670		1508		1624	-110
140	187	153	107	846	M36	623	563	1275	587	1426	-63	M36	623	563	1348	657	1496	-63	M42	623	563	1395	707	1546	-63	M42	623	563	1461	772	1611	-63
150	201	164	115	854	M30	615	555	1267	595	1434	-55	M36	615	555	1340	665	1504	-55	M36	615	555	1387	715	1154	-55	M42	615	555	1453	780	1619	-55
160	214	175	123	862	M30	607	547	1259	603	1442	-47	M36	607	547	1332	673	1012	-47	M36	607	547	1379	723	1562	-47	M42	607	547	1445	788	1627	-47
170	228	186	130	869	M30	600	540	1252	610	1449	-40	M36	600	540	1325	680	1019	-40	M36	600	540	1372	730	1569	-40	M42	600	540	1438	795	1634	-40
180	241	197	138	877	M30	592	532	1244	618	1457	-32	M30	592	532	1317	688	1527	-32	M36	592	532	1364	738	1577	-32	M42	592	532	1430	803	1642	-32
190	254	208	146	885	M30	584	524	1236	626	1465	-24	M30	584	524	1309	696	1535	-24	M36	584	524	1356	746	1585	-24	M36	584	524	1422	811	1650	-24
200	268	219	154	893	M30	576	516	1228	634	1473	-16	M30	576	516	1301	704	1543	-16	M36	576	516	1348	754	1593	-16	M36	576	516	1414	819	1658	-16
210	281	230	161	900	M30	569	509	1221	641	1480	-9	M30	569	509	1294	711	1550	-9	M36	569	509	1341	761	1600	-9	M36	569	509	1407	826	1665	-9
220	294	241	169	891	M30	561	561	1213	649	1471	-1	M30	561	561	1286	719	1541	-1	M30	561	561	1333	769	1591	-1	M36	561	561	1399	834	1656	-1
230	308	252	177	899	M24	553	553	1205	657	1479	7	M30	553	553	1278	727	1549	7	M30	553	553	1325	777	1599	7	M36	553	553	1391	842	1664	7
240	321	263	184	906	M24	546	546	1198	664	1486	14	M30	546	546	1271	734	1556	14	M30	546	546	1318	784	1606	14	M36	546	546	1384	849	1671	14
250	335	274	192	914	M24	538	538	1190	672	1494	22	M30	538	538	1263	742	1564	22	M30	538	538	1310	792	1614	22	M36	538	538	1376	857	1679	22
260	348	285	200	922	M24	530	530	1182	680	1502	30	M30	530	530	1255	750	1572	30	M30	530	530	1302	800	1622	30	M36	530	530	1368	865	1687	30
270	361	296	207	929	M24	523	523	1175	687	1509	37	M30	523	523	1248	757	1579	37	M30	523	523	1295	807	1629	37	M36	523	523	1361	872	1694	37
280	375	307	215	937	M24	515	515	1167	695	1517	45	M30	515	515	1240	765	1587	45	M30	515	515	1287	815	1637	45	M30	515	515	1353	880	1702	45
290	388	318	223	945	M24	507	507	1159	703	1525	53	M24	507	507	1232	773	1595	53	M30	507	507	1279	823	1645	53	M30	507	507	1345	888	1710	53
300	401	329	230	952	M24	500	500	1152	710	1532	60	M24	500	500	1225	780	1602	60	M30	500	500	1272	830	1652	60	M30	500	500	1338	895	1717	60
310	415	340	238	971	M24	532	572	1144	718	1531	88	M24	532	572	1217	788	1601	88	M30	532	572	1264	838	1651	88	M30	532	572	1330	903	1716	88
320	428	351	246	979	M24	524	564	1136	726	1539	96	M24	524	564	1209	796	1609	96	M30	524	564	1256	846	1659	96	M30	524	564	1322	911	1724	96
330	442	362	253	986	M20	517	557	1129	733	1546	103	M24	517	557	1202	803	1616	103	M30	517	557	1249	853	1666	103	M30	517	557	1315	918	1731	103
340	455	373	261	994	M20	509	549	1121	741	1554	111	M24	509	549	1194	811	1624	111	M30	509	549	1241	861	1674	111	M30	509	549	1307	926	1739	111
350	468	384	269	1002	M20	501	541	1113	749	1562	119	M24	501	541	1186	819	1632	119	M30	501	541	1233	869	1682	119	M30	501	541	1299	934	1747	119
360	482	395	276	1009	M20	494	534	1106	756	1569	126	M24	494	534	1179	826	1639	126	M24	494	534	1226	876	1689	126	M30	494	534	1292	941	1754	126
370	495	406	284	1017	M20	486	526	1098	764	1577	134	M24	486	526	1171	834	1647	134	M24	486	526	1218	884	1697	134	M30	486	526	1284	949	1762	134
380	509	417	292	1025	M20	478	518	1090	772	1585	142	M24	478	518	1163	842	1655	142	M24	478	518	1210	892	1705	142	M30	478	518	1276	957	1770	142
390	522	428	299	1032	M20	471	511	1083	779	1592	149	M24	471	511	1156	849	1662	149	M24	471	511	1203	899	1712	149	M30	471	511	1269	964	1777	149
400	535	439	307	1040	M20	463	503	1075	787	1600	157	M24	463	503	1148	857	1670	157	M24	463	503	1195	907	1720	157	M30	463	503	1261	972	1785	157
410	549	449	315	1048	M20	455	495	1067	795	1608	165	M24	455	495	1140	865	1678	165	M24	455	495	1187	915	1728	165	M30	455	495	1253	980	1793	165
420	562	460	322	1055	M20	513	553	1060	802	1615	172	M20	513	553	1133	872	1685	172	M24	513	553	1180	922	1735	172	M30	513	553	1246	987	1800	172
430	575	471	330	1063	M20	505	545	1052	810	1623	180	M20	505	545	1125	880	1693	180	M24	505	545	1172	930	1743	180	M30	505	545	1238	995	1808	180
440	589	482	338	1071	M20	497	537	1044	818	1631	188	M20	497	537	1117	888	1701	188	M24	497	537	1164	938	1751	188	M24	497	537	1230	1003	1816	188
450	602	493	345	1078	M20	490	530	1037	825	1638	195	M20	490	530	1110	895	1708	195	M24	490	530	1157	945	1758	195	M24	490	530	1223	1010	1823	195
460	616	504	353	1086	M20	482	522	1029	833	1646	203	M20	482	522	1102	903	1716	203	M24	482	522	1149	953	1766	203	M24	482	522	1215	1018	1831	203
470	629	515	361	1094	M20	474	514	1021	841	1654	211	M20	474	514	1094	911	1724	211	M24	474	514	1141	961	1774	211	M24	474	514	1207	1026	1839	211
480	642	526	368	1101	M20	467	507	1014	848	1661	218	M20	467	507	1087	918	1731	218	M24	467	507	1134	968	1781	218	M24	467	507	1200	1033	1846	218
490	656	537	376	1109	M20	459	499	1006	856	1669	226	M20	459	499	1079	926	1739	226	M24	459	499	1126	976	1789	226	M24	459	499	1192	1041	1854	226
500	669	548	384	1117	M20	451	491	998	864	1677	234	M20	451	491	1071	934	1747	234	M24	451	491	1118	984	1797	234	M24	451	491	1184	1049	1862	234
510	683	559	391	1139	M20	519	559	991	871	1679	256	M20	519	559	1064	941	1749	256	M20	519	559	1111	991	1799	256	M24	519	559	1177	1056	1864	256
520	696	570	399	1147	M16	511	551	983	879	1687	264	M20	511	551	1056	949	1757	264	M20	511	551	1103	999	1807	264	M24	511	551	1169	1064	1872	264
530	709	581	407	1155	M16	503	543	975	887	1695	272	M20	503	543	1048	957	1765	272	M20	503	543	1095	1007	1815	272	M24	503	543	1161	1072	1880	272
540	723	592	415	1163	M16	495	535	967	895	1703	280	M20	495	535	1040	965	1773	280	M20	495	535	1087	1015	1823	280	M24	495	535	1153	1080	1888	280
550	736	603	422	1170	M16	488	528	960	902	1710	287	M20	488	528	1033	972	1780	287	M20	488	528	1080	1022	1830	287	M24	488	528	1146	1087	1895	287
560	749	614	430	1178	M16	480	520	952	910	1718	295	M20	480	520	1025	980	1788	295	M20	480	520	1072	1030	1838	295	M24	480	520	1138	1095	1903	295
570	763	625	438	1186	M16	472	512	944	918	1726	303	M20	472	512	1017	988	1796	303	M20	472	512	1064	1038	1846	303	M24	472	512	1130	1103	1911	303
580	776	636	445	1193	M16	465	505	937	925	1733	310	M20	465	505	1010	995	1803	310	M20	465	505	1057	1045	1853	310	M24	465	505	1123	1110	1918	310
590	790	647	453	1201	M16	457	497	929	933	1741	318	M20	457	497	1002	1003	1811	318	M20	457	497	1049	1053	1861	318	M24	457	497	1115	1118	1926	318
600	803	658	461	1209	M16	449	489	921	941	1749	326	M20	449	489	994	1011	1819	326	M20	449	489	1041	1061	1869	326	M24	449	489	1107	1126	1934	326
610	816	669	468	1236	M16	552	552	914	948	1756	358	M20	552	552	987	1018	1826	358	M20	552	552	1034	1068	1876	358	M24	552	552	1100	1133	1941	358
620	830	680	476	1244	M16	544	544	906	956	1764	366	M20	544	544	979	1026	1834	366	M20	544	544	1026	1076	1884	366	M24	544	544	1092	1141	1949	366
630	843	691	484	1252	M16	536	536	898	964	1772	374	M20	536	536	971	1034	1842	374	M20	536	536	1018	1084	1892	374	M24	536	536	1084	1149	1957	374
640	857	702	491	1259	M16	529	529	891	971	1779	381	M20	529	529	964	1041	1849	381	M20	529	529	1011	1091	1899	381	M20	529	529	1077	1156	1964	381
650	870	713	499	1267	M16	521	521	883	979	1787	389	M16	521	521	956	1049	1857	389	M20	521	521	1003	1099	1907	389	M20	521	521	1069	1164	1972	389
660	883	724	507	1275	M16	513	513	875	987	1795	397	M16	513	513	948	1057	1865	397	M20	513	513	995	1107	1915	397	M20	513	513	1061	1172	1980	397
670	897	734	514	1282	M16	506	506	868	994	1802	404	M16	506	506	941	1064	1872	404	M20	506	506	988	1114	1922	404	M20	506	506	1054	1179	1987	404
680	910	745	522	1290	M16	498	498	860	1002	1810	412	M16	498	498	933	1072	1880	412	M20	498	498	980	1122	1930	412	M20	498	498	1046	1187	1995	412
690	923	756	530	1298	M16	490	490	852	1010	1818	420	M16	490	490	925	1080	1888	420	M20	490	490	972	1130	1938	420	M20	490	490	1038	1195	2003	420
700	937	767	537	1305	M16	483	483	845	1017	1825	427	M16	483	483	918	1087	1895	427	M20	483	483	965	1137	1945	427	M20	483	483	1031	1202	2010	427
710	950	778	545	1313	M16	475	475	837	1025	1833	435	M16	475	475	910	1095	1903	435	M20	475	475	957	1145	1953	435	M20	475	475	1023	1210	2018	435
720	964	789	553	1321	M16	467	467	829	1033	1841	443	M16	467	467	902	1103	1911	443	M20	467	467	949	1153	1961	443	M20	467	467	1015	1218	2026	443
730	977	800	560	1328	M16	460	460	822	1040	1848	450	M16	460	460	895	1110	1918	450	M20	460	460	942	1160	1968	450	M20	460	460	1008	1225	2033	450
740	990	811	568	1336	M16	452	452	814	1048	1856	458	M16	452	452	887	1118	1926	458	M20	452	452	934	1168	1976	458	M20	452	452	1000	1233	2041	458
750	1004	822	576	1344	M16	444	444	806	1056	1864	466	M16	444	444	879	1126	1934	466	M20	444	444	926	1176	1984	466	M20	444	444	992	1241	2049	466

C7: DIMENSIONS FOR SIZES C7–24 TO C7–27

MOVEMENT DEPENDENT DIMENSIONS

		MOVEMENT PROVIDED mm	90–180	190–340	350–440	450–540	550–640	650–750
TRAVEL RANGE DEPENDENT DIMENSIONS		U	355	355	385	385	525	525
		TA	445	630	745	860	975	1102
		TB	510	510	540	540	600	665
		TC	475	475	475	475	600	600
		TD	270	270	270	270	270	280
		TE	510	510	540	600	640	695
		TF	475	475	525	600	685	770
		TG	290	290	290	290	290	300
		TH	290	290	290	290	290	300
		TJ	460	460	460	460	460	460
TOP SUSPENSION DETAILS	C7–24	DD	60	46	40	40	40	40
		AA	120	90	80	80	80	80
		BB	100	75	55	55	55	55
		CC	180	130	110	110	110	110
		EE	20	15	15	15	15	15
		GG	75	60	45	45	45	45
		LL	M56	M42	M36	M36	M36	M36
	C7–25	DD	68	52	40	40	40	40
		AA	140	105	80	80	80	80
		BB	115	85	55	55	55	55
		CC	200	150	110	110	110	110
		EE	20	20	15	15	15	15
		GG	80	70	45	45	45	45
		LL	M64	M48	M36	M36	M36	M36
	C7–26	DD	68	60	46	46	40	40
		AA	140	120	90	90	80	80
		BB	115	100	75	75	55	55
		CC	200	180	130	130	110	110
		EE	20	20	15	15	15	15
		GG	80	75	60	60	45	45
		LL	M64	M56	M42	M42	M36	M36
	C7–27	DD	76	60	52	46	46	46
		AA	155	120	105	90	90	90
		BB	130	100	85	75	75	75
		CC	220	180	150	130	130	130
		EE	25	20	20	15	15	15
		GG	90	75	70	60	60	60
		LL	M72	M56	M48	M42	M42	M42

FIXED DIMENSIONS

FA	655	FQ	150	XE	40
FB	228	FR	480	XF	570
FC	240	FS	585	XG	355
FD	179	FT	355	XH	320
FE	526	FU	100	XJ	440
FF	25	FV	350	XK	805
FG	100	FW	40	XL	40
FH	40	FX	280	XM	400
FJ	65	FY	375	XN	50
FK	480	FZ	630	XP	500
FL	350	XA	1020	XQ	302
FM	30	XB	355	XR	460
FN	400	XC	535		
FP	230	XD	500		

SPRING SIZE DEPENDENT DIMENSIONS

	C7–24	C7–25	C7–26	C7–27
SA	868	868	868	868
SB	918	918	918	918
SC	1115	1115	1115	1115
SD	1150	1150	1150	1150
SE	1150	1150	1150	1150
SF	540	540	540	540

WEIGHTS (kgf)

	C7–24	C7–25	C7–26	C7–27
HS/HD	580	620	670	720
VS/VD	610	660	710	760
VIS/VID	630	680	730	780
HBMCS	630	670	720	770
HBM	560	610	650	710
VBM	590	640	690	740
VBMCS	670	720	770	820
VIBM	610	650	700	750

SINGLE POINT SUSPENSION DIMENSION 'V'

MOVEMENT PROVIDED mm	ALL SIZES		C7–24	C7–25	C7–26	C7–27
	V1	V3	V2	V2	V2	V2
90	91	110				
100	101	122				
110	111	133				
120	120	144				
130	130	156				
140	139	167	149			
150	149	178	158	162	165	166
160	157	189	168	172	175	177
170	167	200	178	182	185	187
180	176	211	187	192	196	198
190	185	222	197	202	206	208
200	194	232	206	212	216	218
210	203	243	216	222	226	229
220	212	254	225	232	236	239
230	220	264	234	241	246	249
240	229	275	243	251	256	259
250	238	285	252	260	266	269
260	246	295	261	270	275	279
270	255	305	270	279	285	289
280	263	315	279	288	295	299
290	272	325	287	297	304	308
300	280	335	296	307	314	318
310	288	345	304	316	323	328
320	297	355	313	325	331	337
330	305	364	321	334	342	347
340	313	374	330	342	351	356
350	TYPES HS AND VIS ARE NOT USED ABOVE 340mm TRAVEL		338	351	360	366
360			346	360	369	375
370			354	369	378	384
380			362	377	387	394
390			370	386	396	403
400			378	394	405	412
410			386	403	414	421
420			394	411	423	430
430			401	419	431	439
440			409	428	440	448
450			416	436	449	457
460			424	444	457	466
470			431	452	466	475
480			439	460	474	483
490			446	468	483	492
500			454	476	491	501
510			461	484	499	509
520			468	492	508	518
530			475	500	516	527
540			482	507	524	535
550			489	515	532	543
560			496	523	540	552
570			503	530	548	560
580			510	538	556	569
590			517	545	564	577
600			523	553	572	585
610			530	560	580	593
620			537	567	588	601
630			543	575	596	609
640			550	582	603	617
650			556	589	611	625
660			563	596	619	633
670			569	603	626	641
680			576	610	634	649
690			582	617	641	657
700			588	624	649	665
710			594	631	656	673
720			601	638	663	680
730			607	645	671	688
740			613	652	678	696
750			619	658	685	703

INSTALLED HEIGHT DIMENSIONS **J4** AND **J7** ALLOW ±25mm ADJUSTMENT.

TAKE-OUT DIMENSIONS **A1**, **A2**, **A3**, **J5**, **J6** AND **J8** ALLOW ±75mm ADJUSTMENT AND ASSUME USE OF A STANDARD F228A EYEBOLT.

WHERE SEVERE HEADROOM LIMITATIONS EXIST, DIMENSIONS **A1**, **A2** AND **A3** CAN BE REDUCED AND DIMENSIONS **J5**, **J6** AND **J8** INCREASED AS FOLLOWS BY USE OF A SHORTENED EYEBOLT:

ØX	M20	M24	M30	M36	M42	M48	M56	M64	M72
CHANGE mm	140	140	120	100	80	NIL	NIL	NIL	NIL

NOTE DIA. **X** IS THREADED ISO METRIC COARSE RIGHT HAND AS STANDARD.

NOTE THAT DIMENSIONS **A1**, **A2**, **A3**, **J4**, **J5**, **J6**, **J7** AND **J8** ARE GIVEN AT ZERO ROTATION, THAT IS WITH THE LEVER IN THE UPPERMOST POSITION.

N.B. DIMENSION **TA** IS THE MINIMUM FORWARD CLEARANCE REQUIRED.

C7: DIMENSIONS FOR SIZES C7–24 TO C7–27

MOVEMENT PROVIDED mm	ALL SIZES				C7–24							C7–25							C7–26							C7–27						
	ALL			HBMCS		HS HD	VS VD	VIS VID	VBM	VBMCS	HBM/VIBM		HS HD	VS VD	VIS VID	VBM	VBMCS	HBM/VIBM		HS HD	VS VD	VIS VID	VBM	VBMCS	HBM/VIBM		HS HD	VS VD	VIS VID	VBM	VBMCS	HBM/VIBM
	C mm	D mm	E mm	J4 mm	ØX mm	A1 mm	A2 mm	A3 mm	J6 mm	J7 mm	J5/J8 mm	ØX mm	A1 mm	A2 mm	A3 mm	J6 mm	J7 mm	J5/J8 mm	ØX mm	A1 mm	A2 mm	A3 mm	J6 mm	J7 mm	J5/J8 mm	ØX mm	A1 mm	A2 mm	A3 mm	J6 mm	J7 mm	J5/J8 mm
		AT 0° ROTATION				AT ZERO ROTATION							AT ZERO ROTATION							AT ZERO ROTATION							AT ZERO ROTATION					
90	120	99	69	1092	M56	871		1739		1847	-71	M64	886		1754		1847	-86														
100	134	110	77	1100	M56	863		1731		1855	-63	M64	878		1746		1855	-78														
110	147	121	84	1107	M56	856		1724		1862	-56	M64	871		1739		1862	-71	M64	871			1739	1862	-71							
120	161	132	92	1115	M48	833		1701		1870	-33	M56	848		1716		1870	-48	M64	863			1731	1870	-63	M72	913		1781		1870	-113
130	174	143	100	1123	M48	825		1693		1878	-25	M56	840		1708		1878	-40	M64	855			1723	1878	-55	M64	855		1723		1878	-55
140	187	153	107	1130	M48	818	818	1686	842	1885	-18	M56	833	833	1701		1885	-33	M64	848			1716	1885	-48	M64	848		1716		1885	-48
150	201	164	115	1138	M48	810	810	1678	850	1893	-10	M56	825	825	1693	835	1893	-25	M56	825	825	1693	835	1893	-25	M64	840	840	1708	820	1893	-40
160	214	175	123	1146	M42	762	762	1630	898	1901	38	M48	802	802	1670	858	1901	-2	M56	817	817	1685	843	1901	-17	M64	832	832	1700	828	1901	-32
170	228	186	130	1153	M42	755	755	1623	905	1908	45	M48	795	795	1663	865	1908	5	M56	810	810	1678	850	1908	-10	M56	810	810	1678	850	1908	-10
180	241	197	138	1161	M42	747	747	1615	913	1916	53	M48	787	787	1655	873	1916	13	M56	802	802	1670	858	1916	-2	M56	802	802	1670	858	1916	-2
190	254	208	146	1145	M42	739	739	1607	921	1900	61	M48	779	779	1647	881	1900	21	M56	794	794	1662	866	1900	6	M56	794	794	1662	866	1900	6
200	268	219	154	1153	M42	731	731	1599	929	1908	69	M48	771	771	1639	889	1908	29	M48	771	771	1639	889	1908	29	M56	786	786	1654	874	1908	14
210	281	230	161	1160	M42	724	724	1592	936	1915	76	M42	724	724	1592	936	1915	76	M48	764	764	1632	896	1915	36	M56	779	779	1647	881	1915	21
220	294	241	169	1168	M36	716	716	1584	944	1923	84	M42	716	716	1584	944	1923	84	M48	756	756	1624	904	1923	44	M56	771	771	1639	889	1923	29
230	308	252	177	1176	M36	708	708	1576	952	1931	92	M42	708	708	1576	952	1931	92	M48	748	748	1616	912	1931	52	M56	763	763	1631	897	1931	37
240	321	263	184	1183	M36	701	701	1569	959	1938	99	M42	701	701	1569	959	1938	99	M48	741	741	1609	919	1938	59	M48	741	741	1609	919	1938	59
250	335	274	192	1191	M36	693	693	1561	967	1946	107	M42	693	693	1561	967	1946	107	M48	733	733	1601	927	1946	67	M48	733	733	1601	927	1946	67
260	348	285	200	1199	M36	685	685	1553	975	1954	115	M42	685	685	1553	975	1954	115	M42	685	685	1553	975	1954	115	M48	725	725	1593	935	1954	75
270	361	296	207	1206	M36	678	678	1546	982	1961	122	M42	678	678	1546	982	1961	122	M42	678	678	1546	982	1961	122	M48	718	718	1586	942	1961	82
280	375	307	215	1214	M36	670	670	1538	990	1969	130	M42	670	670	1538	990	1969	130	M42	670	670	1538	990	1969	130	M48	710	710	1578	950	1969	90
290	388	318	223	1222	M36	662	662	1530	998	1977	138	M36	662	662	1530	998	1977	138	M42	662	662	1530	998	1977	138	M48	702	702	1570	958	1977	98
300	401	329	230	1229	M36	655	655	1523	1005	1984	145	M36	655	655	1523	1005	1984	145	M42	655	655	1523	1005	1984	145	M48	695	695	1563	965	1984	105
310	415	340	238	1237	M30	647	647	1515	1013	1992	153	M36	647	647	1515	1013	1992	153	M42	647	647	1515	1013	1992	153	M42	647	647	1515	1013	1992	153
320	428	351	246	1245	M30	639	639	1507	1021	2000	161	M36	639	639	1507	1021	2000	161	M42	639	639	1507	1021	2000	161	M42	639	639	1507	1021	2000	161
330	442	362	253	1252	M30	632	632	1500	1028	2007	168	M36	632	632	1500	1028	2007	168	M42	632	632	1500	1028	2007	168	M42	632	632	1500	1028	2007	168
340	455	373	261	1260	M30	624	624	1492	1036	2015	176	M36	624	624	1492	1036	2015	176	M42	624	624	1492	1036	2015	176	M42	624	624	1492	1036	2015	176
350	468	384	269	1250	M30	646	646	1484	1044	2005	184	M36	646	646	1484	1044	2005	184	M42	646	646	1484	1044	2005	184	M42	646	646	1484	1044	2005	184
360	482	395	276	1257	M30	639	639	1477	1051	2012	191	M36	639	639	1477	1051	2012	191	M36	639	639	1477	1051	2012	191	M42	639	639	1477	1051	2012	191
370	495	406	284	1265	M30	631	631	1469	1059	2020	199	M36	631	631	1469	1059	2020	199	M36	631	631	1469	1059	2020	199	M42	631	631	1469	1059	2020	199
380	509	417	292	1273	M30	623	623	1461	1067	2028	207	M36	623	623	1461	1067	2028	207	M36	623	623	1461	1067	2028	207	M42	623	623	1461	1067	2028	207
390	522	428	299	1280	M30	616	616	1454	1074	2035	214	M36	616	616	1454	1074	2035	214	M36	616	616	1454	1074	2035	214	M42	616	616	1454	1074	2035	214
400	535	439	307	1288	M30	608	608	1446	1082	2043	222	M36	608	608	1446	1082	2043	222	M36	608	608	1446	1082	2043	222	M42	608	608	1446	1082	2043	222
410	549	449	315	1296	M30	600	600	1438	1090	2051	230	M36	600	600	1438	1090	2051	230	M36	600	600	1438	1090	2051	230	M42	600	600	1438	1090	2051	230
420	562	460	322	1303	M30	593	593	1431	1097	2058	237	M30	593	593	1431	1097	2058	237	M36	593	593	1431	1097	2058	237	M42	593	593	1431	1097	2058	237
430	575	471	330	1311	M30	585	585	1423	1105	2066	245	M30	585	585	1423	1105	2066	245	M36	585	585	1423	1105	2066	245	M36	585	585	1423	1105	2066	245
440	589	482	338	1319	M30	577	577	1415	1113	2074	253	M30	577	577	1415	1113	2074	253	M36	577	577	1415	1113	2074	253	M36	577	577	1415	1113	2074	253
450	602	493	345	1324	M30	570	630	1408	1120	2079	260	M30	570	630	1408	1120	2079	260	M36	570	630	1408	1120	2079	260	M36	570	630	1408	1120	2079	260
460	616	504	353	1332	M30	562	622	1400	1128	2087	268	M30	562	622	1400	1128	2087	268	M36	562	622	1400	1128	2087	268	M36	562	622	1400	1128	2087	268
470	629	515	361	1340	M30	554	614	1392	1136	2095	276	M30	554	614	1392	1136	2095	276	M36	554	614	1392	1136	2095	276	M36	554	614	1392	1136	2095	276
480	642	526	368	1347	M30	547	607	1385	1143	2102	283	M30	547	607	1385	1143	2102	283	M36	547	607	1385	1143	2102	283	M36	547	607	1385	1143	2102	283
490	656	537	376	1355	M30	539	599	1377	1151	2110	291	M30	539	599	1377	1151	2110	291	M36	539	599	1377	1151	2110	291	M36	539	599	1377	1151	2110	291
500	669	548	384	1363	M24	531	591	1369	1159	2118	299	M30	531	591	1369	1159	2118	299	M36	531	591	1369	1159	2118	299	M36	531	591	1369	1159	2118	299
510	683	559	391	1370	M24	524	584	1362	1166	2125	306	M30	524	584	1362	1166	2125	306	M36	524	584	1362	1166	2125	306	M36	524	584	1362	1166	2125	306
520	696	570	399	1378	M24	516	576	1354	1174	2133	314	M30	516	576	1354	1174	2133	314	M30	516	576	1354	1174	2133	314	M36	516	576	1354	1174	2133	314
530	709	581	407	1386	M24	508	568	1346	1182	2141	322	M30	508	568	1346	1182	2141	322	M30	508	568	1346	1182	2141	322	M36	508	568	1346	1182	2141	322
540	723	592	415	1394	M24	500	560	1338	1190	2149	330	M30	500	560	1338	1190	2149	330	M30	500	560	1338	1190	2149	330	M36	500	560	1338	1190	2149	330
550	736	603	422	1401	M24	553	593	1331	1197	2156	337	M30	553	593	1331	1197	2156	337	M30	553	593	1331	1197	2156	337	M36	553	593	1331	1197	2156	337
560	749	614	430	1409	M24	545	585	1323	1205	2164	345	M30	545	585	1323	1205	2164	345	M30	545	585	1323	1205	2164	345	M36	545	585	1323	1205	2164	345
570	763	625	438	1417	M24	537	577	1315	1213	2172	353	M30	537	577	1315	1213	2172	353	M30	537	577	1315	1213	2172	353	M36	537	577	1315	1213	2172	353
580	776	636	445	1424	M24	530	570	1308	1220	2179	360	M30	530	570	1308	1220	2179	360	M30	530	570	1308	1220	2179	360	M36	530	570	1308	1220	2179	360
590	790	647	453	1432	M24	522	562	1300	1228	2187	368	M30	522	562	1300	1228	2187	368	M30	522	562	1300	1228	2187	368	M36	522	562	1300	1228	2187	368
600	803	658	461	1440	M24	514	554	1292	1236	2195	376	M30	514	554	1292	1236	2195	376	M30	514	554	1292	1236	2195	376	M36	514	554	1292	1236	2195	376
610	816	669	468	1447	M24	507	547	1285	1243	2202	383	M30	507	547	1285	1243	2202	383	M30	507	547	1285	1243	2202	383	M36	507	547	1285	1243	2202	383
620	830	680	476	1455	M24	499	539	1277	1251	2210	391	M30	499	539	1277	1251	2210	391	M30	499	539	1277	1251	2210	391	M30	499	539	1277	1251	2210	391
630	843	691	484	1463	M24	491	531	1269	1259	2218	399	M30	491	531	1269	1259	2218	399	M30	491	531	1269	1259	2218	399	M30	491	531	1269	1259	2218	399
640	857	702	491	1470	M24	484	524	1262	1266	2225	406	M30	484	524	1262	1266	2225	406	M30	484	524	1262	1266	2225	406	M30	484	524	1262	1266	2225	406
650	870	713	499	1483	M24	541	571	1254	1274	2228	424	M30	541	571	1254	1274	2228	424	M30	541	571	1254	1274	2228	424	M30	541	571	1254	1274	2228	424
660	883	724	507	1491	M24	533	563	1246	1282	2236	432	M24	533	563	1246	1282	2236	432	M30	533	563	1246	1282	2236	432	M30	533	563	1246	1282	2236	432
670	897	734	514	1498	M24	526	556	1239	1289	2243	439	M24	526	556	1239	1289	2243	439	M30	526	556	1239	1289	2243	439	M30	526	556	1239	1289	2243	439
680	910	745	522	1506	M24	518	548	1231	1297	2251	447	M24	518	548	1231	1297	2251	447	M30	518	548	1231	1297	2251	447	M30	518	548	1231	1297	2251	447
690	923	756	530	1514	M24	510	540	1223	1305	2259	455	M24	510	540	1223	1305	2259	455	M30	510	540	1223	1305	2259	455	M30	510	540	1223	1305	2259	455
700	937	767	537	1521	M24	503	533	1216	1312	2266	462	M24	503	533	1216	1312	2266	462	M30	503	533	1216	1312	2266	462	M30	503	533	1216	1312	2266	462
710	950	778	545	1529	M24	495	525	1208	1320	2274	470	M24	495	525	1208	1320	2274	470	M30	495	525	1208	1320	2274	470	M30	495	525	1208	1320	2274	470
720	964	789	553	1537	M20	487	517	1200	1328	2282	478	M24	487	517	1200	1328	2282	478	M30	487	517	1200	1328	2282	478	M30	487	517	1200	1328	2282	478
730	977	800	560	1544	M20	480	510	1193	1335	2289	485	M24	480	510	1193	1335	2289	485	M30	480	510	1193	1335	2289	485	M30	480	510	1193	1335	2289	485
740	990	811	568	1552	M20	472	502	1185	1343	2297	493	M24	472	502	1185	1343	2297	493	M30	472	502	1185	1343	2297	493	M30	472	502	1185	1343	2297	493
750	1004	822	576	1560	M20	464	494	1177	1351	2305	501	M24	464	494	1177	1351	2305	501	M30	464	494	1177	1351	2305	501	M30	464	494	1177	1351	2305	501

C7: DIMENSIONS FOR SIZES C7–28 AND C7–29

MOVEMENT DEPENDENT DIMENSIONS

	MOVEMENT PROVIDED mm	90–180	190–340	350–440	450–540	550–640	650–750
TRAVEL RANGE DEPENDENT DIMENSIONS	U	355	355	385	385	525	525
	TA	445	630	745	860	975	1102
	TB	510	510	540	540	600	665
	TC	475	475	475	475	600	600
	TD	270	270	270	270	270	280
	TE	510	510	570	600	655	700
	TF	475	475	545	630	700	790
	TG	290	290	290	290	290	300
	TH	290	290	290	290	290	300
	TJ	460	460	460	460	460	460
TOP SUSPENSION DETAILS – C7–28	DD	76	68	52	52	46	46
	AA	155	140	105	105	90	90
	BB	130	115	85	85	75	75
	CC	220	200	150	150	130	130
	EE	25	20	20	20	15	15
	GG	90	80	70	70	60	60
	LL	M72	M64	M48	M48	M42	M42
TOP SUSPENSION DETAILS – C7–29	DD	85	68	60	60	52	52
	AA	175	140	120	120	105	105
	BB	150	115	100	100	85	85
	CC	240	200	180	180	150	150
	EE	25	20	20	20	20	20
	GG	100	80	75	75	70	70
	LL	M80	M64	M56	M56	M48	M48

FIXED DIMENSIONS

FA	710	FQ	150	XE	46
FB	228	FR	480	XF	570
FC	240	FS	585	XG	355
FD	179	FT	355	XH	320
FE	572	FU	100	XJ	440
FF	25	FV	350	XK	805
FG	100	FW	46	XL	40
FH	46	FX	280	XM	415
FJ	65	FY	375	XN	60
FK	480	FZ	680	XP	500
FL	350	XA	1060	XQ	302
FM	30	XB	355	XR	460
FN	415	XC	575		
FP	230	XD	550		

SPRING SIZE DEPENDENT DIMENSIONS

	C7–28	C7–29
SA	999	999
SB	1059	1059
SC	1245	1245
SD	1280	1280
SE	1280	1280
SF	575	575

WEIGHTS (kgf)

	C7–28	C7–29
HS/HD	930	1000
VS/VD	970	1040
VIS/VID	990	1060
HBMCS	1000	1070
HBM	910	980
VBM	960	1030
VBMCS	1050	1120
VIBM	960	1030

SINGLE POINT SUSPENSION DIMENSION 'V'

MOVEMENT PROVIDED mm	ALL SIZES V1	ALL SIZES V3	C7–28 V2	C7–29 V2
120	123	145		
130	132	157		
140	142	168		
150	152	180		
160	162	191		
170	171	203		
180	181	214	196	
190	190	225	207	209
200	199	236	217	219
210	209	247	227	229
220	218	258	237	240
230	227	269	247	250
240	237	279	256	260
250	246	290	267	270
260	255	301	277	280
270	263	311	286	290
280	272	322	296	300
290	281	332	306	310
300	290	343	315	320
310	299	353	323	329
320	308	364	334	339
330	317	374	344	349
340	325	384	353	358
350	TYPES HS AND VIS ARE NOT USED ABOVE 340mm TRAVEL		362	368
360			371	377
370			381	387
380			390	396
390			399	405
400			408	415
410			417	424
420			426	433
430			435	442
440			443	451
450			452	460
460			461	469
470			469	478
480			478	487
490			487	496
500			495	505
510			504	514
520			512	522
530			520	531
540			529	540
550			537	548
560			545	557
570			553	567
580			562	574
590			570	582
600			578	590
610			586	599
620			594	607
630			602	615
640			609	623
650			617	632
660			625	640
670			633	648
680			640	656
690			648	664
700			656	672
710			663	680
720			671	688
730			678	695
740			686	703
750			693	711

INSTALLED HEIGHT DIMENSIONS **J4** AND **J7** ALLOW ±25mm ADJUSTMENT.

TAKE-OUT DIMENSIONS **A1**, **A2**, **A3**, **J5**, **J6** AND **J8** ALLOW ±75mm ADJUSTMENT AND ASSUME USE OF A STANDARD F228A EYEBOLT.

WHERE SEVERE HEADROOM LIMITATIONS EXIST, DIMENSIONS **A1**, **A2** AND **A3** CAN BE REDUCED AND DIMENSIONS **J5**, **J6** AND **J8** INCREASED AS FOLLOWS BY USE OF A SHORTENED EYEBOLT:

ØX	M36	M42	M48	M56	M64	M72	M80
CHANGE mm	100	80	NIL	NIL	NIL	NIL	NIL

NOTE DIA. **X** IS THREADED ISO METRIC COARSE RIGHT HAND AS STANDARD.

NOTE THAT DIMENSIONS **A1**, **A2**, **A3**, **J4**, **J5**, **J6**, **J7** AND **J8** ARE GIVEN AT ZERO ROTATION, THAT IS WITH THE LEVER IN THE UPPERMOST POSITION.

N.B. DIMENSION **TA** IS THE MINIMUM FORWARD CLEARANCE REQUIRED.

C7: DIMENSIONS FOR SIZES C7–28 AND C7–29

MOVEMENT PROVIDED mm	ALL SIZES				C7–28								C7–29							
	ALL			HBMCS		HS HD	VS VD	VIS VID	HBM	VIBM	VBMCS	VBM		HS HD	VS VD	VIS VID	HBM	VIBM	VBMCS	VBM
	C mm	D mm	E mm	J4 mm	ØX mm	A1 mm	A2 mm	A3 mm	J5 mm	J6 mm	J7 mm	J8 mm	ØX mm	A1 mm	A2 mm	A3 mm	J5 mm	J6 mm	J7 mm	J8 mm
		AT ZERO ROTATION				AT ZERO ROTATION								AT ZERO ROTATION						
120	161	132	92	1131	M72	913		1922	-113		2016	-113								
130	174	143	100	1139	M72	905		1914	-105		2024	-105	M80	985		1994	-185		2024	-185
140	187	153	107	1146	M72	898		1907	-98		2031	-98	M80	978		1987	-178		2031	-178
150	201	164	115	1154	M72	890		1899	-90		2039	-90	M72	890		1899	-90		2039	-90
160	214	175	123	1162	M64	832		1841	-32		2047	-32	M72	882		1891	-82		2047	-82
170	228	186	130	1169	M64	825		1834	-25		2054	-25	M72	875		1884	-75		2054	-75
180	241	197	138	1177	M64	817	817	1826	-17	973	2062	-17	M72	867		1876	-67		2062	-67
190	254	208	146	1171	M64	809	809	1818	-9	981	2056	-9	M64	809	809	1818	-9	981	2056	-9
200	268	219	154	1179	M64	801	801	1810	-1	989	2064	-1	M64	801	801	1810	-1	989	2064	-1
210	281	230	161	1186	M56	779	779	1788	21	1011	2071	21	M64	794	794	1803	6	996	2071	6
220	294	241	169	1194	M56	771	771	1780	29	1019	2079	29	M64	786	786	1795	14	1004	2079	14
230	308	252	177	1202	M56	763	763	1772	37	1027	2087	37	M64	778	778	1787	22	1012	2087	22
240	321	263	184	1209	M56	756	756	1765	44	1034	2094	44	M64	771	771	1780	29	1019	2094	29
250	335	274	192	1217	M56	748	748	1757	52	1042	2102	52	M56	748	748	1757	52	1042	2102	52
260	348	285	200	1225	M56	740	740	1749	60	1050	2110	60	M56	740	740	1749	60	1050	2110	60
270	361	296	207	1232	M56	733	733	1742	67	1057	2117	67	M56	733	733	1742	67	1057	2117	67
280	375	307	215	1240	M56	725	725	1734	75	1065	2125	75	M56	725	725	1734	75	1065	2125	75
290	388	318	223	1248	M48	702	702	1711	98	1088	2133	98	M56	717	717	1726	83	1073	2133	83
300	401	329	230	1255	M48	695	695	1704	105	1095	2140	105	M56	710	710	1719	90	1080	2140	90
310	415	340	238	1263	M48	687	687	1696	113	1103	2148	113	M56	702	702	1711	98	1088	2148	98
320	428	351	246	1271	M48	679	679	1688	121	1111	2156	121	M56	694	694	1703	106	1096	2156	106
330	442	362	253	1278	M48	672	672	1681	128	1118	2163	128	M56	687	687	1696	113	1103	2163	113
340	455	373	261	1286	M48	664	664	1673	136	1126	2171	136	M56	679	679	1688	121	1111	2171	121
350	468	384	269	1270	M48	686	716	1665	144	1134	2155	144	M48	686	716	1665	144	1134	2155	144
360	482	395	276	1277	M48	679	709	1658	151	1141	2162	151	M48	679	709	1658	151	1141	2162	151
370	495	406	284	1285	M48	671	701	1650	159	1149	2170	159	M48	671	701	1650	159	1149	2170	159
380	509	417	292	1293	M42	623	653	1602	207	1197	2178	207	M48	663	693	1642	167	1157	2178	167
390	522	428	299	1300	M42	616	646	1595	214	1204	2185	214	M48	656	686	1635	174	1164	2185	174
400	535	439	307	1308	M42	608	638	1587	222	1212	2193	222	M48	648	678	1627	182	1172	2193	182
410	549	449	315	1316	M42	600	630	1579	230	1220	2201	230	M48	640	670	1619	190	1180	2201	190
420	562	460	322	1323	M42	593	623	1572	237	1227	2208	237	M48	633	663	1612	197	1187	2208	197
430	575	471	330	1331	M42	585	615	1564	245	1235	2216	245	M48	625	655	1604	205	1195	2216	205
440	589	482	338	1339	M42	577	607	1556	253	1243	2224	253	M48	617	647	1596	213	1203	2224	213
450	602	493	345	1331	M42	570	630	1549	260	1250	2216	260	M42	570	630	1549	260	1250	2216	260
460	616	504	353	1339	M42	562	622	1541	268	1258	2224	268	M42	562	622	1541	268	1258	2224	268
470	629	515	361	1347	M42	554	614	1533	276	1266	2232	276	M42	554	614	1533	276	1266	2232	276
480	642	526	368	1354	M42	547	607	1526	283	1273	2239	283	M42	547	607	1526	283	1273	2239	283
490	656	537	376	1362	M42	539	599	1518	291	1281	2247	291	M42	539	599	1518	291	1281	2247	291
500	669	548	384	1370	M42	531	591	1510	299	1289	2255	299	M42	531	591	1510	299	1289	2255	299
510	683	559	391	1377	M42	524	584	1503	306	1296	2262	306	M42	524	584	1503	306	1296	2262	306
520	696	570	399	1385	M36	516	576	1495	314	1304	2270	314	M42	516	576	1495	314	1304	2270	314
530	709	581	407	1393	M36	508	568	1487	322	1312	2278	322	M42	508	568	1487	322	1312	2278	322
540	723	592	415	1401	M36	500	560	1479	330	1320	2286	330	M42	500	560	1479	330	1320	2286	330
550	736	603	422	1400	M36	553	608	1472	337	1327	2285	337	M42	553	608	1472	337	1327	2285	337
560	749	614	430	1408	M36	545	600	1464	345	1335	2293	345	M42	545	600	1464	345	1335	2293	345
570	763	625	438	1416	M36	537	592	1456	353	1343	2301	353	M42	537	592	1456	353	1343	2301	353
580	776	636	445	1423	M36	530	585	1449	360	1350	2308	360	M42	530	585	1449	360	1350	2308	360
590	790	647	453	1431	M36	522	577	1441	368	1358	2316	368	M42	522	577	1441	368	1358	2316	368
600	803	658	461	1439	M36	514	569	1433	376	1366	2324	376	M42	514	569	1433	376	1366	2324	376
610	816	669	468	1446	M36	507	562	1426	383	1373	2331	383	M42	507	562	1426	383	1373	2331	383
620	830	680	476	1454	M36	499	554	1418	391	1381	2339	391	M36	499	554	1418	391	1381	2339	391
630	843	691	484	1462	M36	491	546	1410	399	1389	2347	399	M36	491	546	1410	399	1389	2347	399
640	857	702	491	1469	M36	484	539	1403	406	1396	2354	406	M36	484	539	1403	406	1396	2354	406
650	870	713	499	1487	M36	541	576	1395	424	1404	2362	424	M36	541	576	1395	424	1404	2362	424
660	883	724	507	1495	M36	533	568	1387	432	1412	2370	432	M36	533	568	1387	432	1412	2370	432
670	897	734	514	1502	M36	526	561	1380	439	1419	2377	439	M36	526	561	1380	439	1419	2377	439
680	910	745	522	1510	M36	518	553	1372	447	1427	2385	447	M36	518	553	1372	447	1427	2385	447
690	923	756	530	1518	M36	510	545	1364	455	1435	2393	455	M36	510	545	1364	455	1435	2393	455
700	937	767	537	1525	M36	503	538	1357	462	1442	2400	462	M36	503	538	1357	462	1442	2400	462
710	950	778	545	1533	M36	495	530	1349	470	1450	2408	470	M36	495	530	1349	470	1450	2408	470
720	964	789	553	1541	M36	487	522	1341	478	1458	2416	478	M36	487	522	1341	478	1458	2416	478
730	977	800	560	1548	M36	480	515	1334	485	1465	2423	485	M36	480	515	1334	485	1465	2423	485
740	990	811	568	1556	M36	472	507	1326	493	1473	2431	493	M36	472	507	1326	493	1473	2431	493
750	1004	822	576	1564	M36	464	499	1318	501	1481	2439	501	M36	464	499	1318	501	1481	2439	501

C8: DIMENSIONS FOR SIZE C8–30

MOVEMENT DEPENDENT DIMENSIONS

	MOVEMENT PROVIDED mm	150–190	200–340	350–440	450–540	550–640	650–750
TRAVEL RANGE DEPENDENT DIMENSIONS	U	300	400	400	500	500	600
	TA	470	600	720	850	970	1110
	TB	650	650	650	650	650	705
	TC	440	520	520	615	615	690
	TE	—	650	650	650	675	705
	TF	—	540	540	620	700	775
	TG	320	320	320	320	320	320
TOP SUSPENSION DETAILS	DD	95	76	68	60	60	52
	AA	200	155	140	120	120	105
	BB	170	130	115	100	100	85
	CC	260	220	200	180	180	150
	EE	30	25	20	20	20	20
	GG	120	90	80	75	75	70

FIXED DIMENSIONS

FA	812	FR	565
FB	332	FS	660
FC	330	FT	400
FD	179	FU	150
FE	657	FV	455
FF	25	FW	40
FG	150	SA	1200
FP	280	SC	1540

WEIGHTS (kgf)

	C8–30
HS/HD	1570
VS/VD	1660
HBM	1540

MOVEMENT PROVIDED mm	ØX mm	ALL			HS HD	HS	VS VD	VS	HBM
		C mm	D mm	E mm	A1 mm	V1 mm	A2 mm	V2 mm	J5 mm
		AT ZERO ROTATION							
150	M90	201	164	115	1210	141			-240
160	M80	214	175	123	1102	150			-132
170	M80	228	186	130	1095	159			-125
180	M80	241	197	138	1087	168			-117
190	M80	254	208	146	1079	177			-109
200	M72	268	219	154	991	186	991	215	-21
210	M72	281	230	161	984	194	984	224	-14
220	M72	294	241	169	976	203	976	234	-6
230	M72	308	252	177	968	211	968	244	2
240	M72	321	263	184	961	220	961	254	9
250	M72	335	274	192	953	228	953	264	17
260	M64	348	285	200	895	237	895	273	75
270	M64	361	296	207	888	245	888	283	82
280	M64	375	307	215	880	253	880	293	90
290	M64	388	318	223	872	261	872	302	98
300	M64	401	329	230	865	270	865	312	105
310	M64	415	340	238	857	278	857	321	113
320	M64	428	351	246	849	286	849	330	121
330	M64	442	362	253	842	294	842	339	128
340	M56	455	373	261	819	302	819	349	151
350	M56	468	384	269	811	310	811	358	159
360	M56	482	395	276	804	318	804	367	166
370	M56	495	406	284	796	325	796	376	174
380	M56	509	417	292	788	333	788	385	182
390	M56	522	428	299	781	341	781	394	189
400	M56	535	439	307	773	348	773	403	197
410	M56	549	449	315	765	356	765	411	205
420	M56	562	460	322	758	364	758	420	212
430	M56	575	471	330	750	371	750	429	220
440	M56	589	482	338	742	379	742	437	228
450	M56	602	493	345	735	386	735	446	235
460	M56	616	504	353	727	394	727	455	243
470	M48	629	515	361	704	401	704	463	266
480	M48	642	526	368	697	408	697	471	273
490	M48	656	537	376	689	415	689	480	281
500	M48	669	548	384	681	423	681	488	289
510	M48	683	559	391	674	430	674	496	296
520	M48	696	570	399	666	437	666	505	304
530	M48	709	581	407	658	444	658	513	312
540	M48	723	592	415	650	451	650	521	320
550	M48	736	603	422	643	458	668	529	327
560	M48	749	614	430	635	465	660	537	335
570	M48	763	625	438	627	472	652	545	343
580	M48	776	636	445	620	479	645	553	350
590	M48	790	647	453	612	486	637	561	358
600	M48	803	658	461	604	493	629	569	366
610	M42	816	669	468	557	499	582	577	413
620	M42	830	680	476	549	506	574	584	421
630	M42	843	691	484	541	513	566	592	429
640	M42	857	702	491	534	520	559	600	436
650	M42	870	713	499	581	526	581	608	444
660	M42	883	724	507	573	533	573	615	452
670	M42	897	734	514	566	539	566	623	459
680	M42	910	745	522	558	546	558	630	467
690	M42	923	756	530	550	552	550	638	475
700	M42	937	767	537	543	559	543	645	482
710	M42	950	778	545	535	565	535	653	490
720	M42	964	789	553	527	571	527	660	498
730	M42	977	800	560	520	578	520	667	505
740	M42	990	811	568	512	584	512	674	513
750	M42	1004	822	576	504	590	504	682	521

C8–30 SUPPORTS ARE AVAILABLE IN THE FOLLOWING TYPES

TYPE HBM
TYPE HS, STYLE TS2 AND TS3
TYPE HD, STYLE TS2, TS3 AND TS4
TYPE VS, STYLE TS2 AND TS3
TYPE VD, STYLE TS2, TS3 AND TS4

TAKE-OUT DIMENSIONS **A1**, **A2** AND **J5** ALLOW ±75mm ADJUSTMENT

NOTE DIA. **X** IS THREADED ISO METRIC COARSE RIGHT HAND AS STANDARD.

NOTE THAT DIMENSIONS **A1**, **A2** AND **J5** ARE GIVEN AT ZERO ROTATION, THAT IS WITH THE LEVER IN THE UPPERMOST POSITION.

C8: DIMENSIONS FOR SIZE C8–31

MOVEMENT DEPENDENT DIMENSIONS

MOVEMENT PROVIDED mm		160–190	200–340	350–440	450–540	550–640	650–750
TRAVEL RANGE DEPENDENT DIMENSIONS	U	300	400	400	500	500	600
	TA	470	600	720	850	970	1110
	TB	650	650	650	650	650	705
	TC	440	520	520	615	615	690
	TE	—	650	650	650	675	705
	TF	—	540	540	620	700	775
	TG	320	320	320	320	320	320
TOP SUSPENSION DETAILS	DD	95	85	68	68	68	60
	AA	200	175	140	140	140	120
	BB	170	150	115	115	115	100
	CC	260	240	200	200	200	180
	EE	30	25	20	20	20	20
	GG	120	100	80	80	80	75

FIXED DIMENSIONS

FA	876	FR	565
FB	332	FS	660
FC	330	FT	400
FD	179	FU	150
FE	733	FV	455
FF	25	FW	40
FG	150	SA	1250
FP	280	SC	1590

WEIGHTS (kgf)

	C8–31
HS/HD	1950
VS/VD	2040
HBM	1920

MOVEMENT PROVIDED mm	ØX mm	ALL			HS HD	HS	VS VD	VS	HBM
		C mm	D mm	E mm	A1 mm	V1 mm	A2 mm	V2 mm	J5 mm
		AT ZERO ROTATION							
160	M90	214	175	123	1202	148			-232
170	M90	228	186	130	1195	157			-225
180	M90	241	197	138	1187	166			-217
190	M90	254	208	146	1179	174			-209
200	M80	268	219	154	1071	183			-101
210	M80	281	230	161	1064	191			-94
220	M80	294	241	169	1056	200			-86
230	M80	308	252	177	1048	208			-78
240	M80	321	263	184	1041	216	1041	254	-71
250	M72	335	274	192	953	225	953	263	17
260	M72	348	285	200	945	233	945	273	25
270	M72	361	296	207	938	241	938	283	32
280	M72	375	307	215	930	249	930	292	40
290	M72	388	318	223	922	257	922	302	48
300	M72	401	329	230	915	266	915	311	55
310	M72	415	340	238	907	274	907	320	63
320	M64	428	351	246	849	281	849	330	121
330	M64	442	362	253	842	289	842	339	128
340	M64	455	373	261	834	297	834	348	136
350	M64	468	384	269	826	305	826	357	144
360	M64	482	395	276	819	313	819	366	151
370	M64	495	406	284	811	320	811	375	159
380	M64	509	417	292	803	328	803	384	167
390	M64	522	428	299	796	336	796	393	174
400	M64	535	439	307	788	343	788	402	182
410	M64	549	449	315	780	351	780	411	190
420	M64	562	460	322	773	358	773	419	197
430	M56	575	471	330	750	366	750	428	220
440	M56	589	482	338	742	373	742	437	228
450	M56	602	493	345	735	380	735	445	235
460	M56	616	504	353	727	388	727	454	243
470	M56	629	515	361	719	395	719	462	251
480	M56	642	526	368	712	402	712	471	258
490	M56	656	537	376	704	409	704	479	266
500	M56	669	548	384	696	416	696	488	274
510	M56	683	559	391	689	424	689	496	281
520	M56	696	570	399	681	431	681	504	289
530	M56	709	581	407	673	438	673	512	297
540	M56	723	592	415	665	445	665	520	305
550	M56	736	603	422	658	451	683	529	312
560	M56	749	614	430	650	458	675	537	320
570	M56	763	625	438	642	465	667	545	328
580	M56	776	636	445	635	472	660	553	335
590	M48	790	647	453	612	479	637	560	358
600	M48	803	658	461	604	485	629	568	366
610	M48	816	669	468	597	492	622	576	373
620	M48	830	680	476	589	499	614	584	381
630	M48	843	691	484	581	505	606	592	389
640	M48	857	702	491	574	512	599	599	396
650	M48	870	713	499	621	519	621	607	404
660	M48	883	724	507	613	525	613	615	412
670	M48	897	734	514	606	531	606	622	419
680	M48	910	745	522	598	538	598	630	427
690	M48	923	756	530	590	544	590	637	435
700	M48	937	767	537	583	551	583	645	442
710	M48	950	778	545	575	557	575	652	450
720	M48	964	789	553	567	563	567	659	458
730	M48	977	800	560	560	569	560	667	465
740	M48	990	811	568	552	576	552	674	473
750	M48	1004	822	576	544	582	544	681	481

C8–31 SUPPORTS ARE AVAILABLE IN THE FOLLOWING TYPES

TYPE HBM
TYPE HS, STYLE TS2 AND TS3
TYPE HD, STYLE TS2, TS3 AND TS4
TYPE VS, STYLE TS2 AND TS3
TYPE VD, STYLE TS2, TS3 AND TS4

TAKE-OUT DIMENSIONS **A1**, **A2** AND **J5** ALLOW ±75mm ADJUSTMENT

NOTE DIA. **X** IS THREADED ISO METRIC COARSE RIGHT HAND AS STANDARD.

NOTE THAT DIMENSIONS **A1**, **A2** AND **J5** ARE GIVEN AT ZERO ROTATION, THAT IS WITH THE LEVER IN THE UPPERMOST POSITION.

CONSTANT EFFORT SUPPORTS: BASE MOUNTED TYPES

TYPE HBMCS

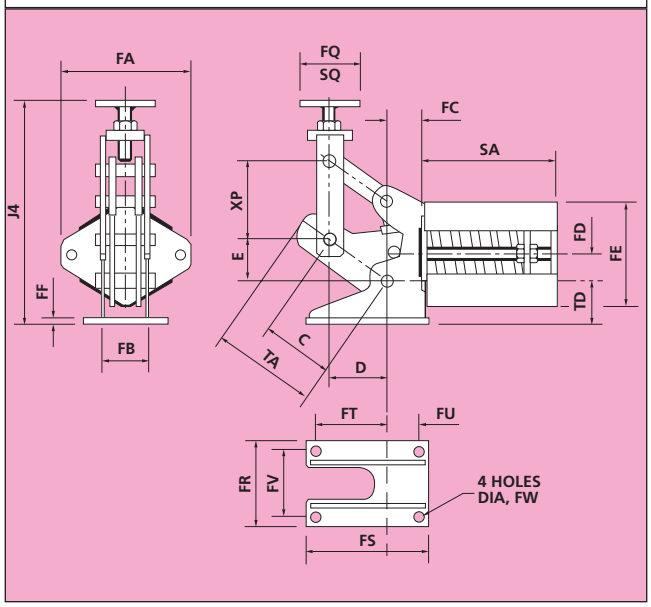

TYPE HBM

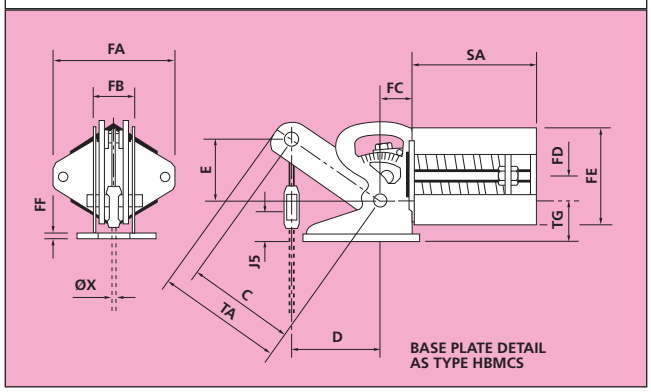

TYPE VBM

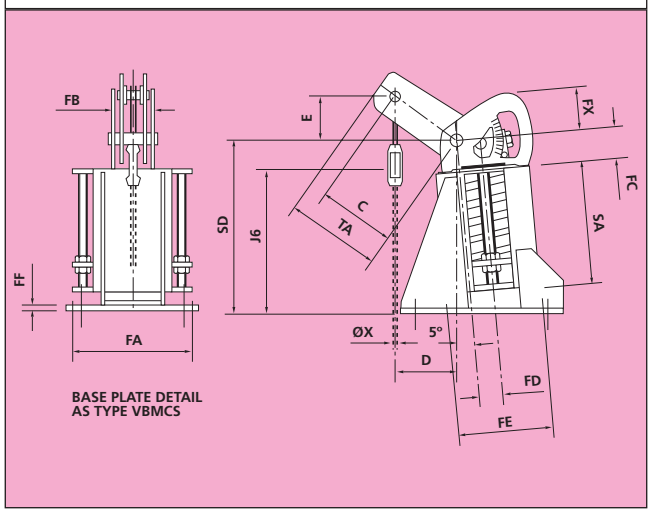

TYPE VBMCS

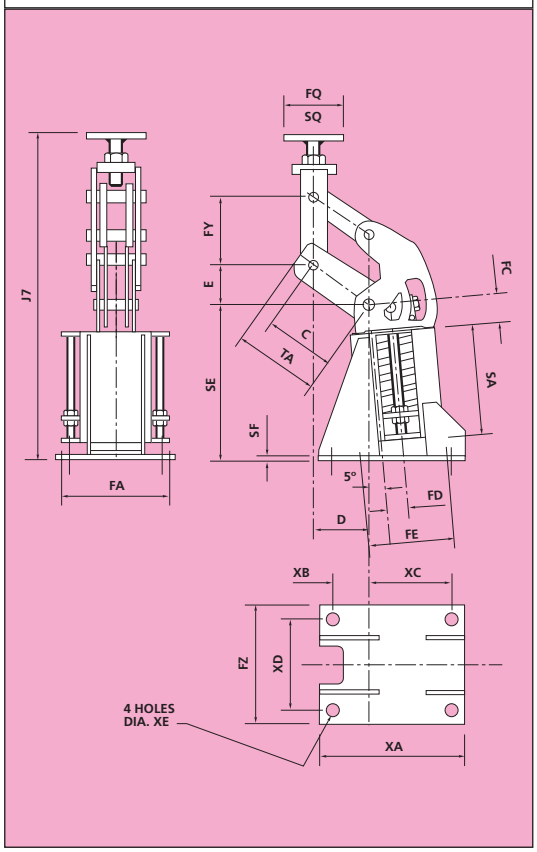

TYPE VIBM

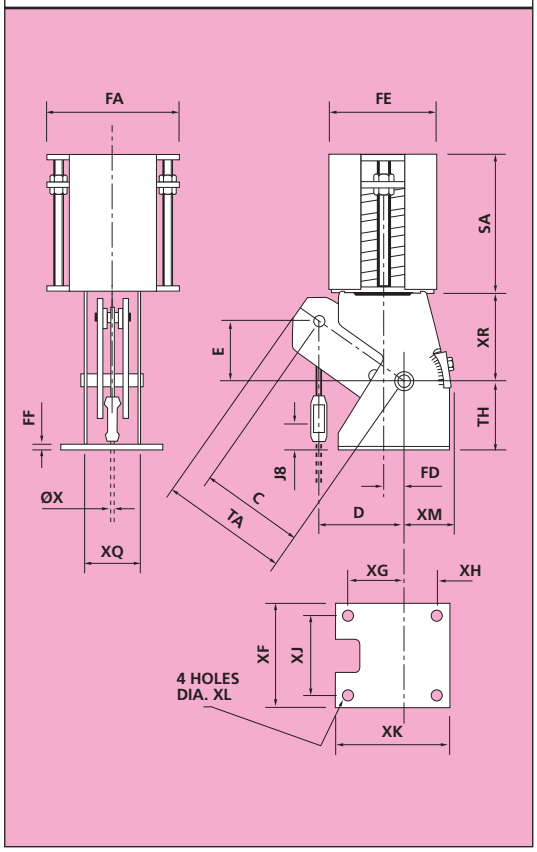

TURN OUT THIS PAGE FOR DETAILS OF SUPPORT SIZE C8–31 AND FOR DIAGRAMS OF CONSTANT EFFORT SUPPORTS: BASE MOUNTED TYPES

Constant Effort Support —
During Load Test

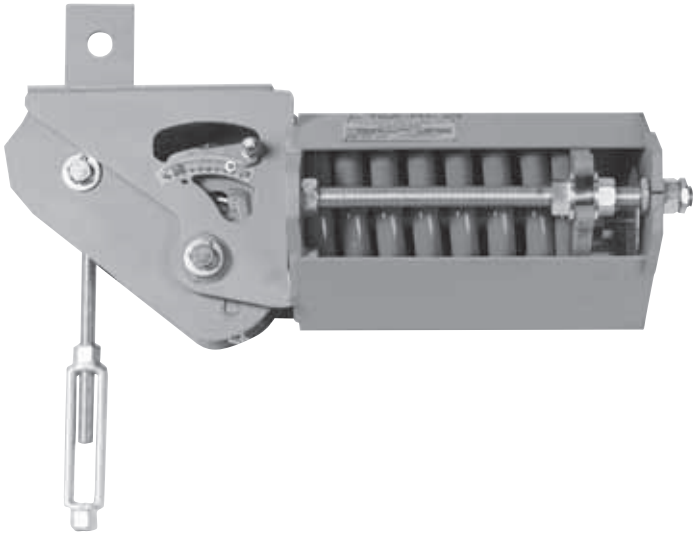

Constant Effort Support —
Type HS

VARIABLE EFFORT SUPPORTS

The latest range of Variable Effort Supports has been designed to cater for the ever increasing space limitations on Offshore Rigs and other process plants and also to enable the units to be finished in either a galvanised or protective paint finish at minimum cost, allowing full assembly without damaging such finishes.

APPLICATION

Variable Effort Supports are used to support the weight of pipework or equipment whilst allowing a degree of movement relative to the supporting structure. Where pipes transport hot (or cold) liquids or gases they expand (or contract) due to the difference between operating and ambient temperatures. It is necessary to support the pipe in operating and ambient conditions, whilst permitting movement between the two. Variable Effort Supports may also be needed to cater for ambient temperature variation local to items of plant or long vertical pipe runs, or where pipes pass between buildings that may be subject to relative movement due to subsidence or earthquake.

LOAD RANGE

We offer a wide range of variable effort supports catering for loads from 3.43kgf to 39120kgf.

Our standard range of variable supports offers 5 travel ranges over 29 spring sizes enabling the engineer to optimise his selection of spring stiffness giving the lowest possible variability.

Our ***High-load*** range of variable supports caters for situations where high load carrying capacity and compact design is required. We offer 3 travel ranges (V1 to V3) over 7 spring sizes catering for loads from 6445kgf to 39120kgf.

Most of these spring sizes are available in the following configurations.

WORKING RANGES

V1	35mm	**V4**	210mm
V2	70mm	**V5**	280mm
V3	140mm		

These figures represent the total working travel available from each range however it should be noted that the allowable deviation will restrict the amount of the full travel range that can be used. The lower the allowable variability the less available travel will be useable.

SPRING STIFFNESS

The stiffness of the spring is a function of the load range and travel range with the shorter travel ranges using the stiffer springs. Spring stiffness has a direct relationship to variability, also referred to as allowable deviation. Variability is the measure of the variance in supporting effort in either the 'cold' or the 'hot' condition when compared with the 'design' load.

The ideal pipe supporting system will exert no additional force on the pipe and will therefore be made up of entirely constant effort supports. This would be a very costly and inefficient solution.

The most cost effective solution is that which utilises 100% of the available 'stress capacity' of the pipe and combines rigid hangers, variable effort supports and constant effort supports to deliver this optimum solution.

Because we offer the engineer a large number of spring sizes over a wide range of working loads it is possible to select the ideal spring rate and create the optimum pipe supporting solution that minimises the need for constant effort supports.

The critical factor in specifying variable effort supports is the allowable variability. The engineer should work towards maximising variability within the specified limit thereby making use of the maximum stress capacity of the pipe and achieving the most cost effective hanger solution.

SUPPORT TYPES

TS1, TS2, TS3	Top Suspended
TA	Top Adjustable
ES	Extended Support
DS	Double Support
BM1, BM2, BM3, BM4	Base Mounted

RELATED SPECIFICATIONS

Our Variable Effort Supports are designed and manufactured to meet the requirements of the following specifications:

EN13480	ANSI/ASME B31.1
ANSI/ASME B31.3	ANSI/MSS SP-58
IBR-REG-371	

INSTALLATION AND ERECTION

Types TS1, TS2, TS3, TA and ES
Lift the support carefully into position and secure to the hanger rod for type TS1, to the beam attachment with a suspension bolt or clevis pin for types TS2 and TS3 or to the support beams for types TA and ES. Make the connection to the pipework via the hanger rod and pipe clip. Apply tension to the spring unit by rotating the turnbuckle (or adjusting nut for type TA). When the preset load is attained, the locking nuts above the spring plate will become free to rotate. The locking nuts beneath the spring plate are then ready to carry any hydrostatic test load. On completion of hydrostatic testing, lagging, etc. the locking nuts must be fully withdrawn from the spring plate to the unlocked position. See diagram on page 40.

Type DS
The procedure is similar to the above except that the spring canister is inverted and application of the load will release the locking nuts below the spring plate, with nuts above the spring plate carrying the hydrostatic test load, etc.

Types BM1, BM2, BM3, BM4
For these supports the load is transferred to the support by rotation of the height adjustment nut, which is situated below the load pad, rather than via a turnbuckle. Then proceed as for TS1, etc.

MAINTENANCE

Variable Effort Supports are designed to be maintenance free. On no account should any attempt be made to remove the spring coil from the canister, since it has been pre-compressed. Periodic inspection should be carried out at a frequency which suits the environment in which they are used. Check for visual damage, for any corrosion (especially of the spring coil and threaded rods) and to ensure that no debris has fallen into the support which could impede the movement of the spring.

A more detailed erection and maintenance procedure is available upon request.

VARIABLE EFFORT SUPPORTS

STANDARD FEATURES

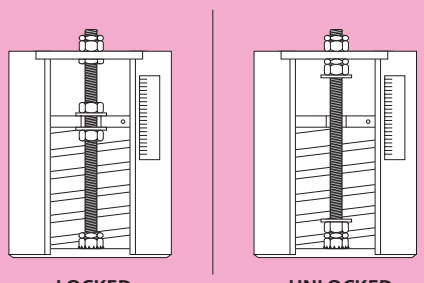

1. Compactness of units. Installed heights designed to minimum.
2. Preset and multi-locking device, allowing unit to be supplied locked at its installed load and ready to accept a test load of at least twice the rated load. The infinitely adjustable multi-lock is permanently fixed to the unit, allowing re-locking at any travel position. This is of particular benefit at times of plant outages or during pipework maintenance/inspection.
3. Overtravel is provided on either side of the working range.
4. Supports are fitted with stainless steel nameplates marked with the installed and operating load, support reference mark, type and unique serial number.
5. Variable effort supports are supplied as standard with plastic coated spring coils and hot-dipped galvanised casings and threaded items.

Type TS2

Type BM1

OPTIONAL FEATURES

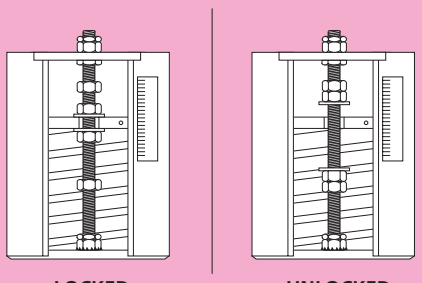

WITH LIMIT STOPS

1. Limit Stops. The preset/multilock facility may be enhanced to precisely limit spring travel. Additional nuts welded in position are used to limit movement to a specified amount.
2. The construction of our variable effort supports makes the application of special paint finishes a simple matter.
3. For low temperature applications suitable grades of carbon steel are used to suit the specified temperature range. Where necessary the material used for spring coils is also changed to an appropriate grade of steel.
4. For extreme corrosive condition extra-thick body section can be supplied.
5. For extended life in offshore or other situations subject to highly corrosive conditions, supports are available in various grades of stainless steel with the spring coil from 17/4 PH (precipitation hardened) stainless steel. Please check with our design department for dimensional information.
6. In Cryogenic applications supports are available manufactured entirely in austenitic stainless steel. Please check with our design department for dimensional information.
7. For type BM1 Supports, where lateral loading greater than 25% of the maximum operating load is envisaged, PTFE covered load pads should be specified.

VARIABLE EFFORT SUPPORTS

SELECTION

Selection of Variable Effort Supports can either be done manually from the catalogue as described below, or by using computer software that is available from our sales department.

SELECTION FROM THE CATALOGUE

Load charts on pages 43 and 54 can be opened out and used at the same time as dimensional charts for the units being selected.

Range: The choice of range V1 to V5 will depend upon the movement at the support position and the allowable change in effort.

Change in effort = movement x Spring Rate

This often expressed as a percentage of operating load.

$$\text{Variation in effort} = \frac{\text{Movement x Spring Rate}}{\text{Operating Load}} \text{ x } 100\%$$

This variation is usually limited to 25% although greater variation is sometimes specified where a higher spring rate is justified in the pipework analysis, or lesser when supporting critical items.

For guidance only on selecting the travel range, movements of 15 mm, 30 mm, 60 mm, 90 mm and 120 mm will produce variations in effort of approximately 25% of 'mid table load' on ranges V1 to V5 respectively.

SUPPORT SIZE

Selection of support size is determined using the selection charts in N or kgf which are located on fold out page.

SELECTION PROCEDURE

1. Determine the required supporting effort and pipe movement (up or down) installed to operating. Weights of spreader beams, heavy pipe clamps, etc. should be added to the pipe load.
2. Estimate which travel range will be required. (See above).
3. Select the smallest spring size which has the operating load within the working travel.
4. Ensure the spring selected can accommodate the preset to operating travel within the working range. This is done by moving up and down the chart from the operating load by the amount of the travel. Down if the movement 'installed to operating' is up, and up if the movement 'installed to operating' is down.
5. If the spring selected can not accommodate the movement try a larger spring size or the next travel range. If the movement can not be accommodated by V5 range then a constant effort support is required.
6. Check the variation in supporting effort for the selected spring

$$\text{Variation} = \frac{\text{Movement x Spring Rate}}{\text{Operating Load}} \text{ x } 100\%$$

If this exceeds the allowable variation then choose the next travel range and go back to 3 above. If the variation is less than half of the allowable then a smaller travel range may be acceptable. Choose a smaller travel range and go back to Step 4. If the variation exceeds the allowable for a V5 selection then a constant effort support is required.

TYPE

Determine the type of unit required, i.e. TS1, TS2, TS3, TA, ES, DS, BM1, BM2, BM3 or BM4. Selection will depend upon the location of steelwork/concrete and available space.

Once the travel range, spring size and type have been selected the descriptions can be written, i.e. V1-18BMI.

CALCULATION OF INSTALLED DIMENSIONS

The "RTO" or rod take out dimension for TS1, TS2, TS3 and DS units and "J" dimension for TA, ES and BM supports tabulated are dimensions at minimum load, i.e. at the start of the working range. In order to determine installed dimensions carry out the calculations below:

a) Installed Load =
Operating Load + (Movement x Spring Rate) for 'installed to operating' movement up.

b) Installed Load =
Operating Load - (Movement x Spring Rate) for 'installed to operating' movement down.

Spring Displacement at Installed Load =

$$\frac{\text{Installed Load - Minimum Load (mm)}}{\text{Spring Rate}}$$

Installed Dimension =
R.T.O. + Spring Displacement at Installed Load (TS1, TS2, TS3 and DS units).

Installed Dimension =
J - Spring Displacement at Installed Load (TA, ES and BM units).

ORDERING

Either:

a) Advise
- i) Number off.
- ii) Support Description, i.e.

V2 —	12 —	TS3
Travel Range	Spring Size	Type

- iii) Operating Load.
- iv) Installed to operating movement and direction.
- v) Finish required.
- vi) Support Mark No.
- vii) Thread Form.

N.B. If exact load and movement are not known supports will be supplied set at mid-travel.

or b)
- i) Number off.
- ii) Support Type.
- iii) Operating Load.
- iv) Installed to operating movement.
- v) Allowable variation. This will be taken as 25% of operating load unless otherwise stated.
- vi) Finish.
- vii) Support Mark No.
- viii) Thread Form.

In this case we will determine support size to be supplied.

TURN OUT THIS PAGE FOR VARIABLE EFFORT SUPPORT SELECTION CHART (Newtons)

VARIABLE EFFORT SUPPORT SELECTION CHART — Newtons

MOVEMENT mm	V1	V2	V3	V4	V5	SPRING SIZE 1	2	3	4	5	6	7	8	9	10	11	12	13	14	15	16	17	18	19	20	21	22	23	24	25	26	27	28	29
OVERTRAVEL						26.7	46.7	75.5	107	125	160	178	289	353	461	608	775	1079	1412	1981	2471	3501	4511	5972	7963	10611	14328	20006	26782	35333	47023	62272	83102	111139
						28.1	48.4	77.6	110	129	165	183	296	363	473	625	798	1108	1453	2034	2544	3591	4631	6132	8176	10894	14711	20532	27483	36281	48270	63934	85360	114064
						29.5	50.2	79.7	112	133	170	189	303	373	486	642	821	1138	1493	2088	2617	3682	4752	6291	8389	11177	15095	21059	28183	37228	49517	65595	87619	116989
						30.9	51.9	81.8	115	137	175	194	310	382	499	659	844	1167	1534	2141	2690	3772	4872	6451	8602	11460	15479	21586	28884	38175	50764	67257	89878	119915
						32.3	53.7	83.9	118	141	179	200	317	392	511	676	867	1196	1575	2194	2763	3863	4992	6610	8815	11743	15863	22112	29584	39122	52010	68919	92137	122840
MIN	0	0	0	0	0	33.7	55.5	86.0	121	146	184	206	324	402	524	693	890	1226	1615	2248	2836	3953	5113	6770	9029	12026	16247	22639	30285	40069	53257	70580	94396	125765
WORKING RANGE						35.1	57.2	88.1	124	150	189	211	331	412	536	710	912	1255	1656	2301	2909	4043	5233	6929	9242	12309	16631	23166	30985	41016	54504	72242	96655	128690
						36.5	59.0	90.2	126	154	194	217	338	422	549	727	935	1285	1697	2354	2982	4134	5353	7089	9455	12591	17015	23692	31686	41964	55751	73904	98914	131616
						37.9	60.7	92.3	129	158	199	222	345	431	562	744	958	1314	1737	2408	3055	4224	5474	7249	9668	12874	17399	24219	32387	42911	56998	75565	101173	134541
						39.3	62.5	94.5	132	162	204	228	352	441	574	761	981	1344	1778	2461	3128	4315	5594	7408	9881	13157	17783	24746	33087	43858	58245	77227	103431	137466
	5	10	20	30	40	40.7	64.2	96.6	135	167	209	234	359	451	587	778	1004	1373	1819	2514	3201	4405	5714	7568	10094	13440	18166	25272	33788	44805	59492	78889	105690	140391
						42.1	66.0	98.7	138	171	214	239	366	461	599	795	1027	1402	1859	2568	3274	4496	5834	7727	10307	13723	18550	25799	34488	45752	60739	80550	107949	143317
						43.5	67.7	101	140	175	219	245	373	471	612	812	1050	1432	1900	2621	3347	4586	5955	7887	10520	14006	18934	26326	35189	46700	61985	82212	110208	146242
						44.9	69.5	103	143	179	224	251	380	481	624	829	1073	1461	1941	2674	3420	4676	6075	8046	10733	14289	19318	26853	35889	47647	63232	83873	112467	149167
						46.3	71.3	105	146	183	228	256	387	490	637	846	1096	1491	1981	2728	3493	4767	6195	8206	10947	14572	19702	27379	36590	48594	64479	85535	114726	152092
	10	20	40	60	80	47.7	73.0	107	149	188	233	262	394	500	650	863	1119	1520	2022	2781	3566	4857	6316	8365	11160	14855	20086	27906	37291	49541	65726	87197	116985	155018
						49.1	74.8	109	152	192	238	267	401	510	662	880	1142	1549	2063	2834	3639	4948	6436	8525	11373	15138	20470	28433	37991	50488	66973	88858	119244	157943
						50.5	76.5	111	154	196	243	273	408	520	675	897	1165	1579	2103	2888	3711	5038	6556	8684	11586	15421	20854	28959	38692	51435	68220	90520	121502	160868
						51.9	78.3	113	157	200	248	279	415	530	687	914	1188	1608	2144	2941	3784	5128	6677	8844	11799	15704	21238	29486	39392	52383	69467	92182	123761	163793
						53.3	80.0	116	160	205	253	284	422	539	700	931	1211	1638	2185	2994	3857	5219	6797	9003	12012	15987	21622	30013	40093	53330	70714	93843	126020	166719
	15	30	60	90	120	54.7	81.8	118	163	209	258	290	429	549	713	948	1234	1667	2225	3048	3930	5309	6917	9163	12225	16270	22005	30539	40794	54277	71960	95505	128279	169644
						56.1	83.5	120	166	213	263	296	436	559	725	965	1257	1697	2266	3101	4003	5400	7038	9323	12438	16553	22389	31066	41494	55224	73207	97166	130538	172569
						57.5	85.3	122	168	217	268	301	443	569	738	982	1280	1726	2307	3154	4076	5490	7158	9482	12652	16836	22773	31593	42195	56171	74454	98828	132797	175494
						58.9	87.1	124	171	221	273	307	450	579	750	999	1303	1755	2347	3208	4149	5580	7278	9642	12865	17119	23157	32119	42895	57118	75701	100490	135056	178420
						60.3	88.8	126	174	226	278	312	457	588	763	1016	1326	1785	2388	3261	4222	5671	7399	9801	13078	17402	23541	32646	43596	58066	76948	102151	137315	181345
	20	40	80	120	160	61.7	90.6	128	177	230	282	318	465	598	775	1033	1349	1814	2429	3314	4295	5761	7519	9961	13291	17685	23925	33173	44296	59013	78195	103813	139574	184270
						63.1	92.3	130	180	234	287	324	472	608	788	1050	1372	1844	2469	3368	4368	5852	7639	10120	13504	17968	24309	33699	44997	59960	79442	105475	141832	187195
						64.5	94.1	132	182	238	292	329	479	618	801	1067	1395	1873	2510	3421	4441	5942	7759	10280	13717	18251	24693	34226	45698	60907	80689	107136	144091	190121
						65.9	95.8	134	185	242	297	335	486	628	813	1084	1418	1902	2551	3474	4514	6033	7880	10439	13930	18534	25077	34753	46398	61854	81936	108798	146350	193046
						67.3	97.6	137	188	247	302	341	493	637	826	1100	1441	1932	2591	3528	4587	6123	8000	10599	14143	18817	25460	35280	47099	62802	83182	110459	148609	195971
	25	50	100	150	200	68.7	99.3	139	191	251	307	346	500	647	838	1117	1464	1961	2632	3581	4660	6213	8120	10758	14356	19100	25844	35806	47799	63749	84429	112121	150868	198896
						70.1	101	141	194	255	312	352	507	657	851	1134	1487	1991	2673	3634	4733	6304	8241	10918	14570	19382	26228	36333	48500	64696	85676	113783	153127	201822
						71.5	103	143	196	259	317	357	514	667	864	1151	1510	2020	2713	3688	4806	6394	8361	11077	14783	19665	26612	36860	49200	65643	86923	115444	155386	204747
						72.9	105	145	199	263	322	363	521	677	876	1168	1532	2050	2754	3741	4879	6485	8481	11237	14996	19948	26996	37386	49901	66590	88170	117106	157645	207672
						74.3	106	147	202	268	327	369	528	686	889	1185	1555	2079	2795	3794	4952	6575	8602	11397	15209	20231	27380	37913	50602	67537	89417	118768	159903	210597
	30	60	120	180	240	75.7	108	149	205	272	331	374	535	696	901	1202	1578	2108	2835	3848	5025	6665	8722	11556	15422	20514	27764	38440	51302	68485	90664	120429	162162	213523
						77.1	110	151	208	276	336	380	542	706	914	1219	1601	2138	2876	3901	5098	6756	8842	11716	15635	20797	28148	38966	52003	69432	91911	122091	164421	216448
						78.5	112	153	210	280	341	385	549	716	926	1236	1624	2167	2917	3954	5170	6846	8963	11875	15848	21080	28532	39493	52703	70379	93157	123753	166680	219373
						79.9	113	155	213	285	346	391	556	726	939	1253	1647	2197	2957	4008	5243	6937	9083	12035	16061	21363	28916	40020	53404	71326	94404	125414	168939	222298
						81.3	115	158	216	289	351	397	563	735	952	1270	1670	2226	2998	4061	5316	7027	9203	12194	16274	21646	29299	40546	54104	72273	95651	127076	171198	225224
MAX	35	70	140	210	280	82.7	117	160	219	293	356	402	570	745	964	1287	1693	2256	3039	4114	5389	7117	9323	12354	16488	21929	29683	41073	54805	73221	96898	128737	173457	228149
OVERTRAVEL						84.1	119	162	222	297	361	408	577	755	977	1304	1716	2285	3079	4168	5462	7208	9444	12513	16701	22212	30067	41600	55506	74168	98145	130399	175716	231074
						85.5	120	164	224	301	366	414	584	765	989	1321	1739	2314	3120	4221	5535	7298	9564	12673	16914	22495	30451	42126	56206	75115	99392	132061	177974	233999
						86.9	122	166	227	306	371	419	591	775	1002	1338	1762	2344	3161	4275	5608	7389	9684	12832	17127	22778	30835	42653	56907	76062	100639	133722	180233	236925
						88.3	124	168	230	310	376	425	598	785	1014	1355	1785	2373	3201	4328	5681	7479	9805	12992	17340	23061	31219	43180	57607	77009	101886	135384	182492	239850
	40	80	160	240	320	89.7	126	170	233	314	380	430	605	794	1027	1372	1808	2403	3242	4381	5754	7570	9925	13151	17553	23344	31603	43707	58308	77956	103132	137046	184751	242775

SPRING RATE N/mm		1	2	3	4	5	6	7	8	9	10	11	12	13	14	15	16	17	18	19	20	21	22	23	24	25	26	27	28	29
	V1	1.40	1.76	2.10	2.80	4.21	4.90	5.62	7.01	9.81	12.6	17.0	23.0	29.4	40.7	53.3	73.0	90.4	120	160	213	283	384	527	701	947	1247	1662	2259	2925
	V2	0.701	0.878	1.05	1.40	2.10	2.45	2.81	3.50	4.90	6.29	8.49	11.5	14.7	20.3	26.7	36.5	45.2	60.2	79.8	107	141	192	263	350	474	623	831	1129	1463
	V3	0.350	0.439	0.526	0.700	1.05	1.23	1.41	1.75	2.45	3.15	4.25	5.74	7.35	10.2	13.3	18.2	22.6	30.1	39.9	53.3	70.7	96.0	132	175	237	312	415	565	731
	V4	-	-	-	-	-	-	-	-	-	2.10	2.83	3.83	4.90	6.78	8.89	12.16	15.07	20.05	26.59	35.52	-	-	-	-	-	-	-	-	-
	V5	-	-	-	-	-	-	-	-	-	-	-	2.87	3.68	5.08	6.67	9.12	11.30	15.04	-	-	-	-	-	-	-	-	-	-	-

RANGE V1

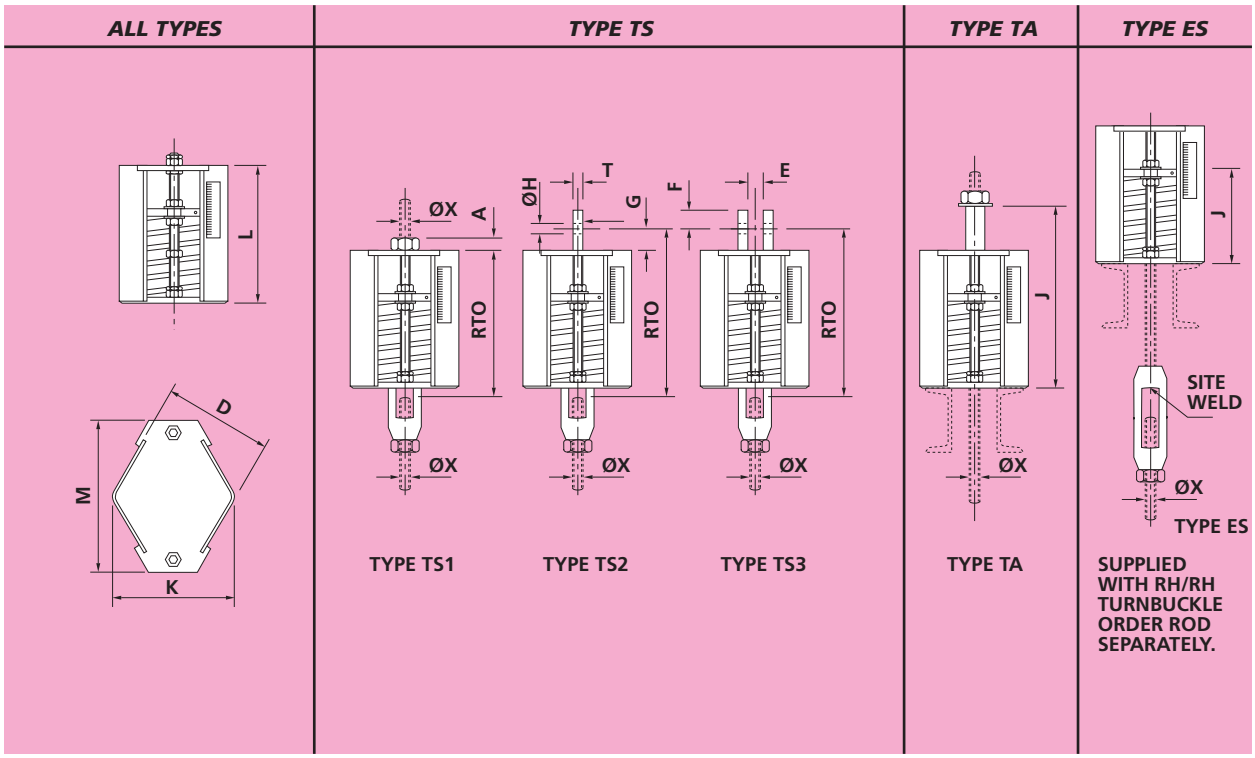

	ROD DIA	BODY DIMENSIONS				RTO AT MIN LOAD (mm)			DEPTH OF THR'D	LUG DIMENSIONS TYPES TS2 & TS3					WEIGHTS kgf			J AT MIN LOAD	WEIGHT	J AT MIN LOAD	WEIGHT
	X mm	D mm	K mm	M mm	L mm (not BM)	TS1	TS2	TS3	A mm	E mm	F mm	G mm	H mm	T mm	TS1	TS2	TS3	mm	kgf	mm	kgf
V1-1	M12	108	122	155	133	150	182	182	12	20	20	30	14	6	4.0	4.1	4.2	153	3.2	84	3.4
V1-2	M12	108	122	155	117	150	182	182	12	20	20	30	14	6	4.1	4.2	4.3	157	3.2	88	3.5
V1-3	M12	108	122	155	123	150	182	182	12	20	20	30	14	6	4.1	4.2	4.3	163	3.3	93	3.5
V1-4	M12	108	122	155	124	150	182	182	12	20	20	30	14	6	4.2	4.3	4.4	164	3.3	94	3.6
V1-5	M12	108	122	155	123	150	182	182	12	20	20	30	14	6	4.2	4.3	4.4	163	3.3	93	3.6
V1-6	M12	108	122	155	126	150	182	182	12	20	20	30	14	6	4.2	4.3	4.4	166	3.3	96	3.6
V1-7	M12	108	122	155	127	150	182	182	12	20	20	30	14	6	4.3	4.4	4.5	167	3.4	97	3.7
V1-8	M12	108	122	155	133	150	182	182	12	20	20	30	14	6	4.4	4.5	4.6	173	3.5	103	3.8
V1-9	M12	108	122	155	136	150	182	182	12	20	20	30	14	6	4.4	4.5	4.6	176	3.6	106	3.8
V1-10	M12	108	122	155	134	150	182	182	12	20	20	30	14	6	4.5	4.6	4.7	174	3.6	105	3.9
V1-11	M12	108	122	155	139	150	182	182	12	20	20	30	14	6	4.6	4.7	4.8	179	3.7	109	4.0
V1-12	M12	108	122	155	139	150	182	182	12	20	20	30	14	6	4.7	4.8	4.9	179	3.8	110	4.1
V1-13	M12	108	122	155	160	158	196	196	12	25	30	36	18	6	5.0	5.1	5.3	200	4.1	130	4.4
V1-14	M12	108	122	155	173	171	209	209	12	25	30	36	18	6	5.4	5.6	5.7	213	4.6	143	4.8
V1-15	M12	108	122	155	194	192	230	230	12	25	30	36	18	6	6.0	6.2	6.3	234	5.1	165	5.4
V1-16	M16	145	164	200	210	207	260	260	16	30	35	50	22	10	12.3	12.6	13.0	250	10.4	172	10.8
V1-17	M16	145	164	200	184	181	234	234	16	30	35	50	22	10	11.5	11.9	12.2	224	9.6	146	10.1
V1-18	M16	145	164	200	197	194	247	247	16	30	35	50	22	10	12.2	12.5	12.9	237	10.3	159	10.7
V1-19	M20	175	198	250	209	205	269	269	20	35	45	60	26	10	20.8	21.4	22.0	249	16.7	163	17.3
V1-20	M24	175	198	250	231	226	301	301	24	40	55	70	33	12	23.0	24.0	25.1	271	18.3	181	19.3
V1-21	M30	175	198	250	259	253	339	339	30	45	55	80	40	15	26.4	27.8	29.4	299	20.5	204	22.2
V1-22	M30	220	250	330	268	262	348	348	30	45	55	80	40	15	45.3	46.6	48.2	308	35.8	208	37.5
V1-23	M36	220	250	330	313	306	403	403	36	60	75	90	46	15	57.2	59.2	61.5	353	44.6	242	46.6
V1-24	M42	220	250	330	360	352	465	465	42	70	85	105	52	20	72.1	75.6	79.8	400	55.4	277	58.3
V1-25	M48	330	376	500	366	356	486	486	48	75	100	120	60	20	137	142	148	406	112	283	116
V1-26	M56	330	376	500	398	387	538	538	56	80	115	140	68	20	161	167	175	438	132	307	139
V1-27	M64	330	376	520	425	412	580	580	64	90	130	155	76	25	184	194	205	465	148	328	158
V1-28	M72	330	376	530	488	474	643	643	72	90	130	155	76	25	233	241	253	528	185	378	198
V1-29	M80	330	376	540	571	555	746	746	80	100	150	175	85	25	293	304	318	611	228	448	247

RANGE V1

TYPE BM

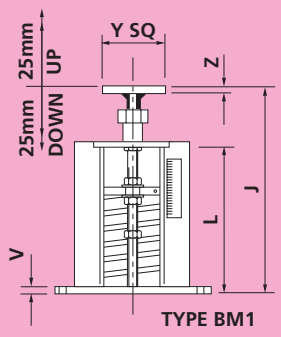

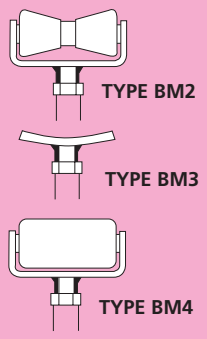

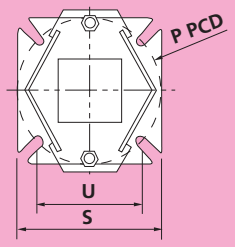

NB. INSTALLED HEIGHT 'J' DIMENSIONS FOR TYPES BM2 BM3 AND BM4 VARY WITH PIPE SIZE. PLEASE CONTACT PIPE SUPPORTS LIMITED'S DESIGN DEPARTMENT FOR DETAILS.

NOTE THAT WHERE DIMENSION 'M' EXCEEDS THE BASE PLATE SQUARE DIMENSION 'S', 'M' WILL BE THE MAX. WIDTH OF THE BASE PLATE.

TYPE DS

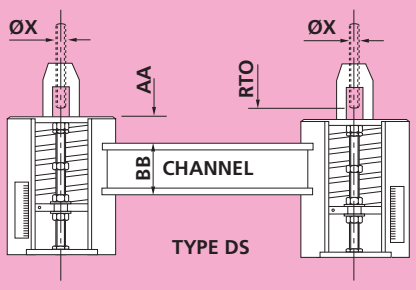

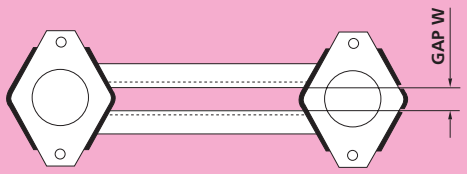

SUPPORTING EFFORT = TABULATED VALUE 2
SPRING RATE = TABULATED VALUE 2
ADD WEIGHT OF UNIT TO LOAD FROM PIPE.

SUPPORT SIZE	J AT MIN. LOAD TYPE BM1 mm	BODY L'TH L mm	BASE PLATE SQ. S mm	BASE PLATE PCD P mm	BASE BOLT CRS. SQ. U mm	BASE BOLT SIZE	BASE PLATE THK V mm	LOAD PAD SQ. Y mm	LOAD PAD THK Z mm	WEIGHT kgf BM1	RTO AT MIN LOAD mm	DIM. AA mm	GAP W mm	BEAM DEPTH BB (mm) 800 MAX CENTRES	BEAM DEPTH BB (mm) 1200 MAX CENTRES	BEAM DEPTH BB (mm) 1600 MAX CENTRES	WEIGHT kgf @ 800 CRS	WEIGHT kgf @ 1200 CRS	WEIGHT kgf @ 1600 CRS
V1-1	184	104	150	160	113	M16	6	75	6	3.5	63	25	18	50	50	50	14	18	21
V1-2	188	108	150	160	113	M16	6	75	6	3.5	59	25	18	50	50	50	14	18	21
V1-3	193	113	150	160	113	M16	6	75	6	3.5	54	25	18	50	50	50	14	18	21
V1-4	194	114	150	160	113	M16	6	75	6	3.6	53	25	18	50	50	50	15	18	22
V1-5	193	113	150	160	113	M16	6	75	6	3.6	54	25	18	50	50	50	15	18	22
V1-6	196	116	150	160	113	M16	6	75	6	3.6	51	25	18	50	50	50	15	18	22
V1-7	197	117	150	160	113	M16	6	75	6	3.6	50	25	18	50	50	50	15	18	22
V1-8	203	123	150	160	113	M16	6	75	6	3.7	44	25	18	50	50	50	15	18	22
V1-9	206	126	150	160	113	M16	6	75	6	3.8	41	25	18	50	50	50	15	18	22
V1-10	210	127	185	177	125	M20	8	75	6	5.4	42	25	22	75	75	75	19	24	30
V1-11	214	131	185	177	125	M20	8	75	6	5.5	38	25	22	75	75	75	19	25	30
V1-12	215	132	185	177	125	M20	8	75	6	5.6	37	25	22	75	75	75	19	25	31
V1-13	241	152	200	197	139	M20	8	75	10	6.8	25	25	26	75	75	75	20	25	31
V1-14	254	165	200	197	139	M20	8	75	10	7.2	25	25	26	75	75	75	21	26	32
V1-15	276	187	200	197	139	M20	8	75	10	7.6	25	25	26	75	75	75	22	27	33
V1-16	292	204	270	240	170	M20	10	100	12	15.1	25	25	33	100	100	125	38	46	64
V1-17	266	178	270	240	170	M20	10	100	12	14.7	25	25	33	100	100	125	36	44	63
V1-18	279	191	270	240	170	M20	10	100	12	15.2	25	25	33	100	100	125	37	45	64
V1-19	289	199	270	240	170	M20	12	120	12	22.5	25	25	40	125	150	150	59	82	97
V1-20	307	217	270	240	170	M20	12	120	12	23.6	25	25	40	125	150	150	63	86	102
V1-21	330	240	270	240	170	M20	12	120	12	25.4	25	25	40	125	150	150	70	93	109
V1-22	337	246	270	268	190	M20	12	150	15	38.6	25	25	52	200	200	250	119	138	158
V1-23	361	270	270	268	190	M20	12	150	15	44	25	25	52	200	200	250	143	162	182
V1-24	401	308	270	268	190	M20	20	150	15	57	25	25	52	200	200	250	172	192	212
V1-25	422	320	400	400	283	M24	20	200	20	117	25	25	60	250	300	390	296	342	411
V1-26	446	339	400	400	283	M24	20	200	20	132	25	25	70	250	300	390	345	391	459
V1-27	473	363	400	400	283	M24	20	200	20	150	25	25	80	250	300	390	391	437	506
V1-28	536	416	400	400	283	M24	25	200	25	189	25	25	80	390	390	430	517	560	629
V1-29	626	495	400	400	283	M24	30	200	30	237	25	25	90	390	390	430	637	681	750

RANGE V2

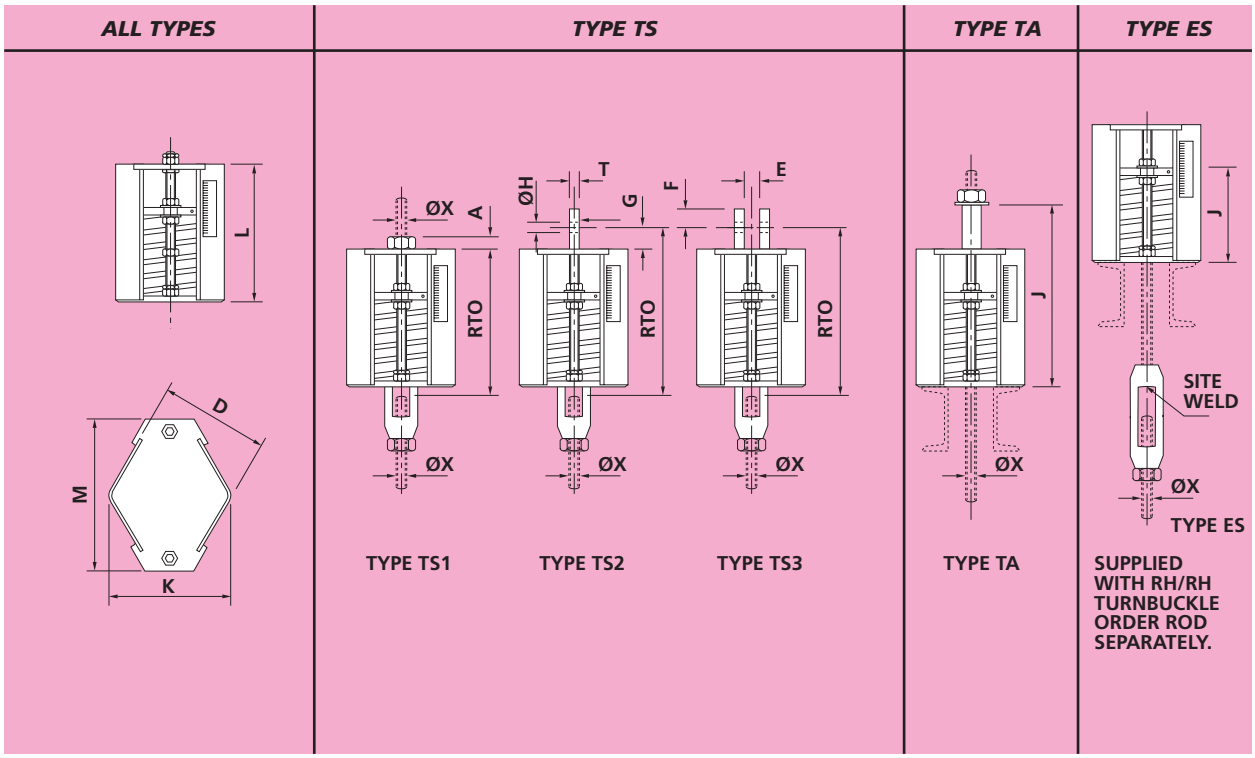

SUPPORT SIZE	ROD DIA	BODY DIMENSIONS				RTO AT MIN LOAD (mm)			DEPTH OF THR'D	LUG DIMENSIONS TYPES TS2 & TS3					WEIGHTS kgf			J AT MIN LOAD	WEIGHT	J AT MIN LOAD	WEIGHT
	X mm	D mm	K mm	M mm	L mm (not BM)	TS1	TS2	TS3	A mm	E mm	F mm	G mm	H mm	T mm	TS1	TS2	TS3	mm	kgf	mm	kgf
V2-1	M12	108	122	155	169	167	199	199	12	20	20	30	14	6	4.4	4.5	4.6	249	3.6	133	3.8
V2-2	M12	108	122	155	176	174	206	206	12	20	20	30	14	6	4.5	4.6	4.7	256	3.7	140	3.9
V2-3	M12	108	122	155	185	183	215	215	12	20	20	30	14	6	4.7	4.8	4.9	265	3.8	148	4.1
V2-4	M12	108	122	155	191	189	221	221	12	20	20	30	14	6	4.8	4.9	5.0	271	3.9	155	4.2
V2-5	M12	108	122	155	187	185	217	217	12	20	20	30	14	6	4.7	4.8	4.9	267	3.9	151	4.1
V2-6	M12	108	122	155	197	195	227	227	12	20	20	30	14	6	4.8	4.9	5.0	277	4.0	161	4.2
V2-7	M12	108	122	155	190	188	220	220	12	20	20	30	14	6	4.8	4.9	5.0	270	4.0	154	4.2
V2-8	M12	108	122	155	206	204	236	236	12	20	20	30	14	6	5.1	5.1	5.3	286	4.2	170	4.4
V2-9	M12	108	122	155	208	206	238	238	12	20	20	30	14	6	5.0	5.1	5.2	288	4.2	171	4.4
V2-10	M12	145	164	200	206	204	236	236	12	20	20	30	14	6	9.5	9.6	9.7	286	8.4	167	8.6
V2-11	M12	145	164	200	209	207	239	239	12	20	20	30	14	6	9.7	9.8	9.9	289	8.6	171	8.8
V2-12	M12	145	164	200	213	211	243	243	12	20	20	30	14	6	9.9	10.0	10.1	293	8.8	175	9.0
V2-13	M12	145	164	200	222	220	258	258	12	25	30	36	18	6	10.2	10.3	10.5	302	9.1	183	9.3
V2-14	M12	145	164	200	235	233	271	271	12	25	30	36	18	6	10.9	11.0	11.1	315	9.7	197	9.9
V2-15	M12	145	164	200	261	259	297	297	12	25	30	36	18	6	12.2	12.4	12.5	341	11.1	223	11.3
V2-16	M16	175	198	250	244	241	294	294	16	30	35	50	22	10	17.7	18.0	18.4	324	15.2	199	15.5
V2-17	M16	175	198	250	264	261	314	314	16	30	35	50	22	10	18.8	19.2	19.6	344	16.3	219	16.7
V2-18	M16	175	198	250	284	281	334	334	16	30	35	50	22	10	20.4	20.8	21.1	364	17.9	239	18.2
V2-19	M20	220	250	320	285	281	345	345	20	35	45	60	26	10	34.0	34.6	35.2	365	28.5	232	29.0
V2-20	M24	220	250	320	311	306	381	381	24	40	55	70	33	12	37.7	38.7	39.8	391	31.7	254	32.4
V2-21	M30	220	250	320	348	342	428	428	30	45	55	80	40	15	45.5	46.9	48.5	428	36.1	281	37.5
V2-22	M30	220	250	330	389	383	469	469	30	45	55	80	40	15	55.2	56.5	58.2	469	45.4	322	46.9
V2-23	M36	220	250	330	454	447	544	544	36	60	75	90	46	15	71.2	73.1	75.5	534	58.3	376	59.6
V2-24	M42	220	250	330	526	518	631	631	42	70	85	105	52	20	89.9	93.4	97.6	606	72.4	436	74.6
V2-25	M48	330	376	500	467	457	587	587	48	75	100	120	60	20	165	170	176	547	139	377	143
V2-26	M56	330	376	500	541	530	681	681	56	80	115	140	68	20	193	199	206	621	162	443	168
V2-27	M64	330	376	520	611	598	766	766	64	90	130	155	76	25	234	243	255	691	195	507	204
V2-28	M72	330	376	530	728	714	883	883	72	90	130	155	76	25	303	312	323	808	250	611	262
V2-29	M80	330	376	540	845	829	1020	1020	80	100	150	175	85	25	382	393	407	925	309	715	328

RANGE V2

TYPE BM

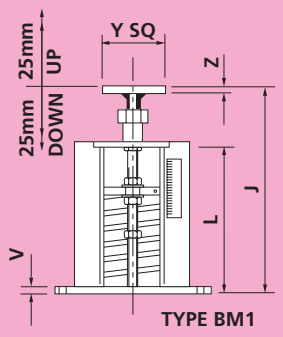

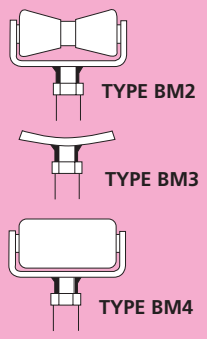

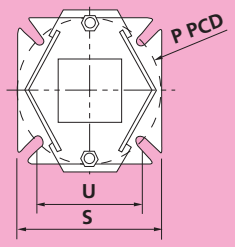

NB. INSTALLED HEIGHT 'J' DIMENSIONS FOR TYPES BM2 BM3 AND BM4 VARY WITH PIPE SIZE. PLEASE CONTACT PIPE SUPPORTS LIMITED'S DESIGN DEPARTMENT FOR DETAILS.

NOTE THAT WHERE DIMENSION 'M' EXCEEDS THE BASE PLATE SQUARE DIMENSION 'S', 'M' WILL BE THE MAX. WIDTH OF THE BASE PLATE.

TYPE DS

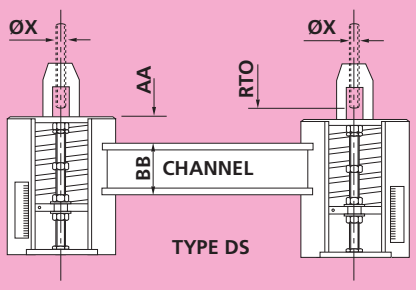

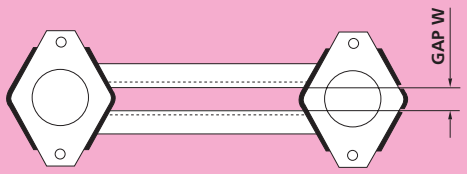

SUPPORTING EFFORT = TABULATED VALUE 2
SPRING RATE = TABULATED VALUE 2
ADD WEIGHT OF UNIT TO LOAD FROM PIPE.

SUPPORT SIZE	J AT MIN. LOAD TYPE BM1 mm	BODY L'TH L mm	BASE PLATE SQ. S mm	BASE PLATE PCD P mm	BASE BOLT CRS. SQ. U mm	BASE BOLT SIZE	BASE PLATE THK V mm	LOAD PAD SQ. Y mm	LOAD PAD THK Z mm	WEIGHT kgf BM1	RTO AT MIN LOAD mm	DIM. AA mm	GAP W mm	BEAM DEPTH BB (mm) 800 MAX CENTRES	1200 MAX CENTRES	1600 MAX CENTRES	WEIGHT kgf @ 800 CRS	@ 1200 CRS	@ 1600 CRS
V2-1	280	159	150	160	113	M16	6	75	6	3.7	25	25	18	50	50	50	15	18	22
V2-2	287	166	150	160	113	M16	6	75	6	3.7	25	25	18	50	50	50	15	19	22
V2-3	295	174	150	160	113	M16	6	75	6	3.8	25	25	18	50	50	50	16	19	23
V2-4	302	181	150	160	113	M16	6	75	6	3.9	25	25	18	50	50	50	16	19	23
V2-5	298	177	150	160	113	M16	6	75	6	3.8	25	25	18	50	50	50	16	19	23
V2-6	308	187	150	160	113	M16	6	75	6	3.9	25	25	18	50	50	50	16	19	23
V2-7	301	180	150	160	113	M16	6	75	6	3.9	25	25	18	50	50	50	16	19	23
V2-8	317	196	150	160	113	M16	6	75	6	4.1	25	25	18	50	50	50	16	20	23
V2-9	318	197	150	160	113	M16	6	75	6	4.0	25	25	18	50	50	50	16	20	23
V2-10	325	205	200	197	139	M20	10	75	6	9.6	25	25	22	75	75	75	28	34	40
V2-11	329	209	200	197	139	M20	10	75	6	9.7	25	25	22	75	75	75	29	34	40
V2-12	333	213	200	197	139	M20	10	75	6	9.9	25	25	22	75	75	75	29	35	40
V2-13	347	221	200	197	139	M20	10	75	10	10.8	25	25	26	75	75	75	30	35	41
V2-14	361	235	200	197	139	M20	10	75	10	11.3	25	25	26	75	75	75	31	37	42
V2-15	387	261	200	197	139	M20	10	75	10	12.4	25	25	26	75	75	75	34	39	45
V2-16	368	239	270	240	170	M20	12	100	12	20.0	25	25	33	100	100	125	48	56	74
V2-17	388	259	270	240	170	M20	12	100	12	20.9	25	25	33	100	100	125	50	58	76
V2-18	408	279	270	240	170	M20	12	100	12	22.2	25	25	33	100	100	125	53	61	80
V2-19	405	276	270	268	190	M20	12	120	12	31.7	25	25	40	125	150	150	84	106	122
V2-20	427	298	270	268	190	M20	12	120	12	34.2	25	25	40	125	150	150	91	113	129
V2-21	454	325	270	268	190	M20	12	120	12	37.8	25	25	40	125	150	150	107	129	145
V2-22	498	366	270	268	190	M20	12	150	15	46.8	25	25	52	200	200	250	139	158	178
V2-23	542	410	270	268	190	M20	12	150	15	55.5	25	25	52	200	200	250	171	190	210
V2-24	607	473	270	268	190	M20	20	150	15	71.4	25	25	52	200	200	250	208	228	247
V2-25	563	420	400	400	283	M24	20	200	20	141	25	25	60	250	300	390	352	398	467
V2-26	629	481	400	400	283	M24	20	200	20	158	25	25	70	250	300	390	409	455	523
V2-27	699	548	400	400	283	M24	20	200	20	192	25	25	80	250	300	390	491	537	606
V2-28	816	655	400	400	283	M24	25	200	25	248	25	25	80	390	390	430	657	700	769
V2-29	940	768	400	400	283	M24	30	200	30	312	25	25	90	390	390	430	815	859	928

RANGE V3

ALL TYPES	TYPE TS	TYPE TA	TYPE ES

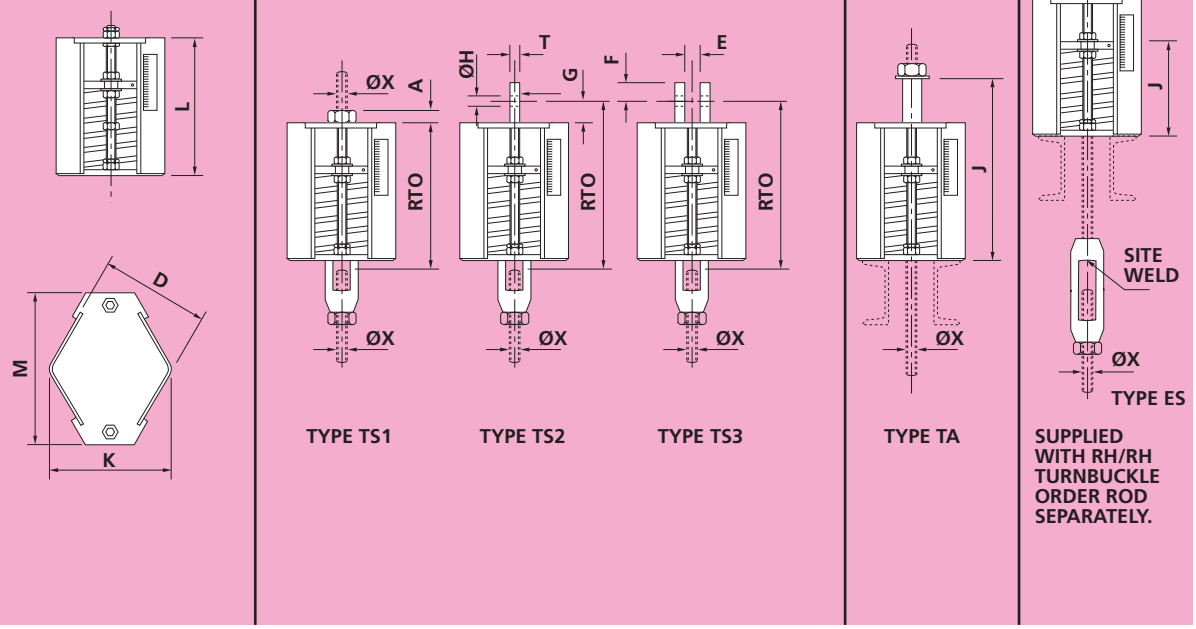

SUPPLIED WITH RH/RH TURNBUCKLE ORDER ROD SEPARATELY.

SUPPORT SIZE	ROD DIA	BODY DIMENSIONS				RTO AT MIN LOAD (mm)			DEPTH OF THR'D	LUG DIMENSIONS TYPES TS2 & TS3					WEIGHTS kgf			J AT MIN LOAD	WEIGHT	J AT MIN LOAD	WEIGHT
	X mm	D mm	K mm	M mm	L mm (not BM)	TS1	TS2	TS3	A mm	E mm	F mm	G mm	H mm	T mm	TS1	TS2	TS3	mm	kgf	mm	kgf
V3-1	M12	108	122	155	294	292	324	324	12	20	20	30	14	6	5.4	5.5	5.6	454	4.7	243	4.8
V3-2	M12	108	122	155	315	313	345	345	12	20	20	30	14	6	5.8	5.8	6.0	475	5.0	264	5.1
V3-3	M12	108	122	155	329	327	359	359	12	20	20	30	14	6	5.9	6.0	6.1	489	5.1	278	5.2
V3-4	M12	108	122	155	330	328	360	360	12	20	20	30	14	6	6.0	6.1	6.2	490	5.2	279	5.3
V3-5	M12	108	122	155	323	321	353	353	12	20	20	30	14	6	6.0	6.1	6.2	483	5.2	272	5.3
V3-6	M12	108	122	155	328	326	358	358	12	20	20	30	14	6	6.0	6.1	6.2	488	5.2	277	5.3
V3-7	M12	108	122	155	336	334	366	366	12	20	20	30	14	6	6.2	6.3	6.4	496	5.4	286	5.5
V3-8	M12	108	122	155	356	354	386	386	12	20	20	30	14	6	6.6	6.7	6.8	516	5.7	306	5.9
V3-9	M12	108	122	155	370	368	400	400	12	20	20	30	14	6	7.0	7.1	7.2	530	6.1	319	6.2
V3-10	M12	145	164	200	351	349	381	381	12	20	20	30	14	6	12.0	12.0	12.2	511	10.9	299	11.0
V3-11	M12	145	164	200	357	355	387	387	12	20	20	30	14	6	12.3	12.4	12.5	517	11.2	305	11.4
V3-12	M12	145	164	200	364	362	394	394	12	20	20	30	14	6	12.7	12.8	12.9	524	11.6	312	11.7
V3-13	M12	145	164	200	380	378	416	416	12	25	30	36	18	6	13.2	13.3	13.5	540	12.1	328	12.2
V3-14	M12	145	164	200	406	404	442	442	12	25	30	36	18	6	14.4	14.5	14.7	566	13.3	353	13.4
V3-15	M12	145	164	200	455	453	491	491	12	25	30	36	18	6	16.9	17.1	17.2	615	15.8	403	15.9
V3-16	M16	220	250	320	374	371	424	424	16	30	35	50	22	10	30.0	30.3	30.7	534	27.0	315	27.2
V3-17	M16	220	250	320	409	406	459	459	16	30	35	50	22	10	33.6	33.9	34.3	569	30.5	350	30.7
V3-18	M16	220	250	320	430	427	480	480	16	30	35	50	22	10	36.0	36.4	36.7	590	32.9	371	33.1
V3-19	M20	220	250	320	473	469	533	533	20	35	45	60	26	10	43.8	44.4	45.0	633	38.2	406	38.4
V3-20	M24	220	250	320	519	514	589	589	24	40	55	70	33	12	50.0	51.0	52.1	679	43.8	448	44.2
V3-21	M30	220	250	320	578	572	658	658	30	45	55	80	40	15	61.6	63.0	64.6	738	51.6	497	52.6
V3-22	M30	220	250	330	649	643	729	729	30	45	55	80	40	15	76.1	77.5	79.1	809	65.7	568	66.7
V3-23	M36	220	250	330	759	752	849	849	36	60	75	90	46	15	101	103	105	919	87.0	667	87.2
V3-24	M42	220	250	330	929	921	1034	1034	42	70	85	105	52	20	136	140	144	1089	117	825	117
V3-25	M48	330	376	500	806	796	926	926	48	75	100	120	60	20	235	240	246	966	207	702	209
V3-26	M56	330	376	500	942	931	1082	1082	56	80	115	140	68	20	283	289	297	1102	248	830	251
V3-27	M64	330	376	520	1074	1061	1229	1229	64	90	130	155	76	25	358	367	379	1234	311	956	318
V3-28	M72	330	376	530	1285	1271	1440	1440	72	90	130	155	76	25	474	483	494	1445	408	1154	417
V3-29	M80	330	376	540	1503	1487	1678	1678	80	100	150	175	85	25	609	620	635	1663	517	1359	532

RANGE V3

TYPE BM

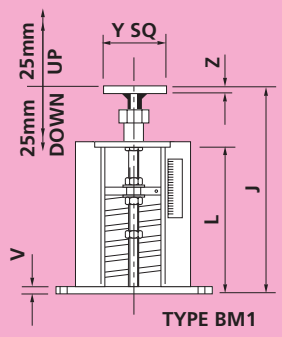

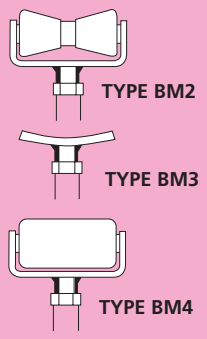

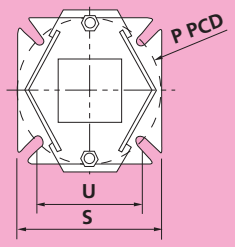

NB. INSTALLED HEIGHT 'J' DIMENSIONS FOR TYPES BM2 BM3 AND BM4 VARY WITH PIPE SIZE. PLEASE CONTACT PIPE SUPPORTS LIMITED'S DESIGN DEPARTMENT FOR DETAILS.

NOTE THAT WHERE DIMENSION 'M' EXCEEDS THE BASE PLATE SQUARE DIMENSION 'S', 'M' WILL BE THE MAX. WIDTH OF THE BASE PLATE.

TYPE DS

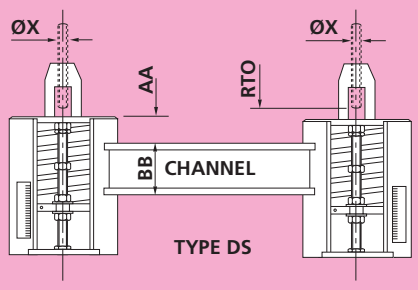

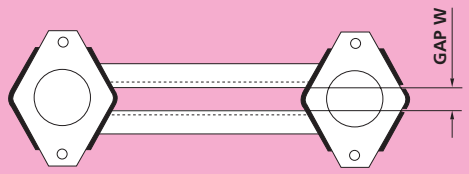

SUPPORTING EFFORT = TABULATED VALUE 2
SPRING RATE = TABULATED VALUE 2
ADD WEIGHT OF UNIT TO LOAD FROM PIPE.

SUPPORT SIZE	J AT MIN. LOAD TYPE BM1 mm	BODY L'TH L mm	BASE PLATE SQ. S mm	BASE PLATE PCD P mm	BASE BOLT CRS. SQ. U mm	BASE BOLT SIZE	BASE PLATE THK V mm	LOAD PAD SQ. Y mm	LOAD PAD THK Z mm	WEIGHT kgf BM1	RTO AT MIN LOAD mm	DIM. AA mm	GAP W mm	BEAM DEPTH BB (mm) 800 MAX CENTRES	1200 MAX CENTRES	1600 MAX CENTRES	WEIGHT kgf @ 800 CRS	@ 1200 CRS	@ 1600 CRS
V3-1	484	281	150	160	113	M16	6	75	6	4.1	25	25	18	50	50	50	17	20	24
V3-2	505	302	150	160	113	M16	6	75	6	4.3	25	25	18	50	50	50	18	21	25
V3-3	519	316	150	160	113	M16	6	75	6	4.4	25	25	18	50	50	50	18	21	25
V3-4	520	317	150	160	113	M16	6	75	6	4.4	25	25	18	50	50	50	18	22	25
V3-5	513	310	150	160	113	M16	6	75	6	4.5	25	25	18	50	50	50	18	22	25
V3-6	518	315	150	160	113	M16	6	75	6	4.5	25	25	18	50	50	50	18	22	25
V3-7	527	324	150	160	113	M16	6	75	6	4.7	25	25	18	50	50	50	19	22	26
V3-8	547	344	150	160	113	M16	6	75	6	4.9	25	25	18	50	50	50	19	23	26
V3-9	560	357	150	160	113	M16	6	75	6	5.2	25	25	18	50	50	50	20	24	27
V3-10	551	349	200	197	139	M20	10	75	6	10.9	25	25	22	75	75	75	33	39	45
V3-11	557	355	200	197	139	M20	10	75	6	11.2	25	25	22	75	75	75	34	39	45
V3-12	564	362	200	197	139	M20	10	75	6	11.5	25	25	22	75	75	75	35	40	46
V3-13	586	378	200	197	139	M20	10	75	10	12.6	25	25	26	75	75	75	36	41	47
V3-14	611	403	200	197	139	M20	10	75	10	13.6	25	25	26	75	75	75	38	44	49
V3-15	661	453	200	197	139	M20	10	75	10	15.6	25	25	26	75	75	75	43	49	54
V3-16	580	371	270	268	190	M20	12	100	12	28.4	25	25	33	100	100	125	71	79	97
V3-17	615	406	270	268	190	M20	12	100	12	31.4	25	25	33	100	100	125	79	87	105
V3-18	636	427	270	268	190	M20	12	100	12	33.5	25	25	33	100	100	125	83	91	109
V3-19	673	462	270	268	190	M20	12	120	12	39.5	25	25	40	125	150	150	103	126	141
V3-20	715	504	270	268	190	M20	12	120	12	43.9	25	25	40	125	150	150	116	138	154
V3-21	764	553	270	268	190	M20	12	120	12	50.6	25	25	40	125	150	150	139	161	177
V3-22	838	624	270	268	190	M20	12	150	15	63.7	25	25	52	200	200	250	180	200	220
V3-23	927	713	270	268	190	M20	12	150	15	79.5	25	25	52	200	200	250	230	250	269
V3-24	1090	874	270	268	190	M20	20	150	15	109	25	25	52	200	200	250	300	320	339
V3-25	982	757	400	400	283	M24	20	200	20	200	25	25	60	250	300	390	492	538	607
V3-26	1109	880	400	400	283	M24	20	200	20	232	25	25	70	250	300	390	589	635	703
V3-27	1242	1009	400	400	283	M24	20	200	20	295	25	25	80	250	300	390	739	785	854
V3-28	1453	1210	400	400	283	M24	25	200	25	390	25	25	80	390	390	430	999	1042	1111
V3-29	1678	1424	400	400	283	M24	30	200	30	501	25	25	90	390	390	430	1269	1313	1382

RANGE V4

ALL TYPES	TYPE TS	TYPE TA	TYPE ES

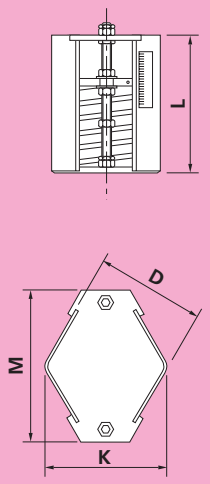

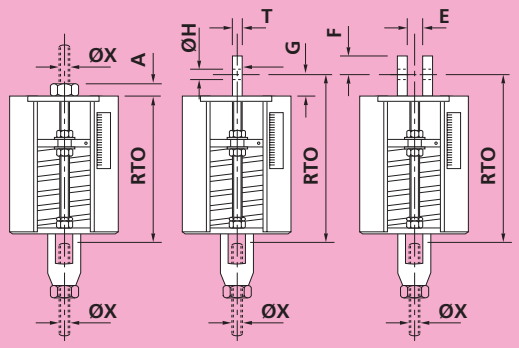

TYPE TS1 TYPE TS2 TYPE TS3

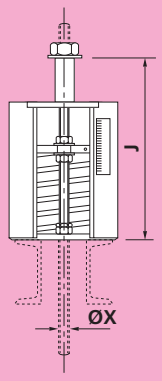

TYPE TA

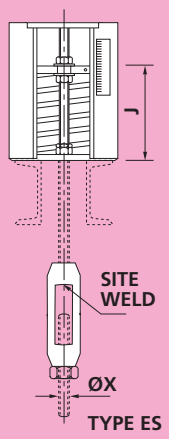

SUPPLIED WITH RH/RH TURNBUCKLE ORDER ROD SEPARATELY.

SUPPORT SIZE	ROD DIA	BODY DIMENSIONS				RTO AT MIN LOAD (mm)			DEPTH OF THR'D	LUG DIMENSIONS TYPES TS2 & TS3					WEIGHTS kgf			J AT MIN LOAD	WEIGHT	J AT MIN LOAD	WEIGHT
	X mm	D mm	K mm	M mm	L mm (not BM)	TS1	TS2	TS3	A mm	E mm	F mm	G mm	H mm	T mm	TS1	TS2	TS3	mm	kgf	mm	kgf
V4-10	M12	177.6	188.9	200	523	521	553	553	12	20	20	30	14	6	16.8	16.8	17.1	763	15.3	471	15.4
V4-11	M12	177.6	188.9	200	532	530	562	562	12	20	20	30	14	6	17.2	17.4	17.5	772	15.7	480	16.0
V4-12	M12	177.6	188.9	200	543	541	573	573	12	20	20	30	14	6	17.8	17.9	18.1	783	16.2	491	16.4
V4-13	M12	177.6	188.9	200	568	566	604	604	12	25	30	36	18	6	18.5	18.6	18.9	808	16.9	516	17.1
V4-14	M12	177.6	188.9	200	607	605	643	643	12	25	30	36	18	6	20.2	20.3	20.6	847	18.6	554	18.8
V4-15	M12	177.6	188.9	200	682	680	718	718	12	25	30	36	18	6	23.7	23.9	24.1	922	22.1	630	22.3
V4-16	M16	246.2	263.5	320	578	575	628	628	16	30	35	50	22	10	42.0	42.4	43.0	818	37.8	517	38.1
V4-17	M16	246.2	263.5	320	633	630	683	683	16	30	35	50	22	10	47.0	47.5	48.0	873	42.7	572	43.0
V4-18	M16	246.2	263.5	320	675	672	725	725	16	30	35	50	22	10	50.4	51.0	51.4	915	46.1	614	46.3
V4-19	M20	246.2	263.5	320	709	705	769	769	20	35	45	60	26	10	61.3	62.2	63.0	949	53.5	639	53.8
V4-20	M24	246.2	263.5	320	778	773	848	848	24	40	55	70	33	12	70.0	71.4	72.9	1018	61.3	704	61.9

RANGE V4

TYPE BM

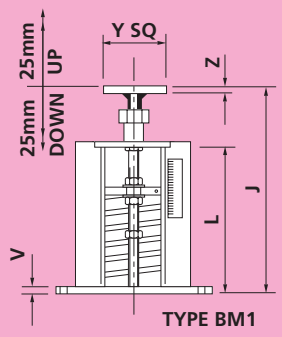

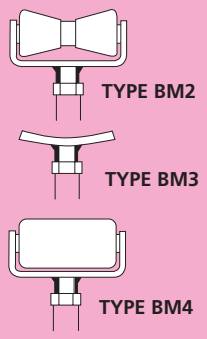

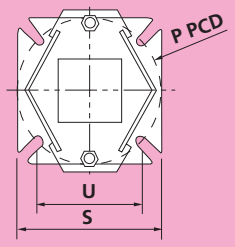

NB. INSTALLED HEIGHT 'J' DIMENSIONS FOR TYPES BM2 BM3 AND BM4 VARY WITH PIPE SIZE. PLEASE CONTACT PIPE SUPPORTS LIMITED'S DESIGN DEPARTMENT FOR DETAILS.

NOTE THAT WHERE DIMENSION 'M' EXCEEDS THE BASE PLATE SQUARE DIMENSION 'S', 'M' WILL BE THE MAX. WIDTH OF THE BASE PLATE.

TYPE DS

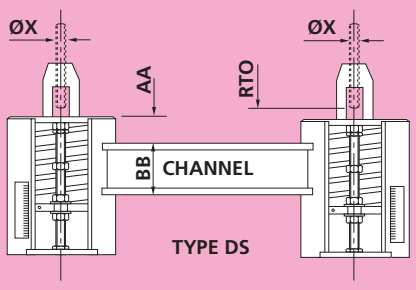

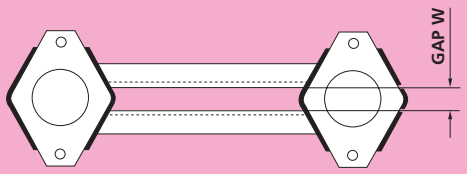

SUPPORTING EFFORT = TABULATED VALUE 2
SPRING RATE = TABULATED VALUE 2
ADD WEIGHT OF UNIT TO LOAD FROM PIPE.

SUPPORT SIZE	J AT MIN. LOAD TYPE BM1 mm	BODY L'TH L mm	BASE PLATE E SQ. S mm	BASE PLATE E PCD P mm	BASE BOLT CRS. SQ. U mm	BASE BOLT SIZE	BASE PLATE E V mm	LOAD PAD SQ. Y mm	LOAD PAD THK Z mm	WEIGHT TYPE BM1 kgf	RTO AT MIN LOAD mm	DIM. M mm	GAP W mm	RSC SIZE 900 MAX CENTRES	RSC SIZE 1300 MAX CENTRES	RSC SIZE 1800 MAX CENTRES	WEIGHT kgf @ 900 CRS	WEIGHT kgf @ 1300 CRS	WEIGHT kgf @ 1800 CRS
V4-10	805	521	200	205	145	M20	10	75	6	15.3	25	25	22	76 x 38	76 x 38	76 x 38	43.4	48.8	55.5
V4-11	814	530	200	205	145	M20	10	75	6	15.7	25	25	22	76 x 38	76 x 38	76 x 38	44.4	49.8	56.5
V4-12	825	541	200	205	145	M20	10	75	6	16.1	25	25	22	76 x 38	76 x 38	76 x 38	45.5	50.9	57.6
V4-13	856	566	200	205	145	M20	10	75	10	17.6	25	25	26	76 x 38	76 x 38	76 x 38	47.0	52.3	59.0
V4-14	894	604	200	205	145	M20	10	75	10	19.0	25	25	26	76 x 38	76 x 38	76 x 38	50.3	55.6	62.3
V4-15	970	680	200	205	145	M20	10	75	10	21.8	25	25	26	76 x 38	76 x 38	76 x 38	57.4	62.7	69.4
V4-16	864	573	270	280	198	M20	12	100	12	39.8	25	25	33	76 x 38	102 x 51	102 x 51	92.8	106	117
V4-17	919	628	270	280	198	M20	12	100	12	44.0	25	25	33	76 x 38	102 x 51	102 x 51	103	116	127
V4-18	961	670	270	280	198	M20	12	100	12	46.9	25	25	33	76 x 38	102 x 51	102 x 51	110	123	134
V4-19	988	695	270	287	203	M20	12	120	12	55.3	25	25	40	102 x 51	127 x 64	127 x 64	136	154	169
V4-20	1053	760	270	287	203	M20	12	120	12	61.5	25	25	40	102 x 51	127 x 64	127 x 64	154	172	187

RANGE V5

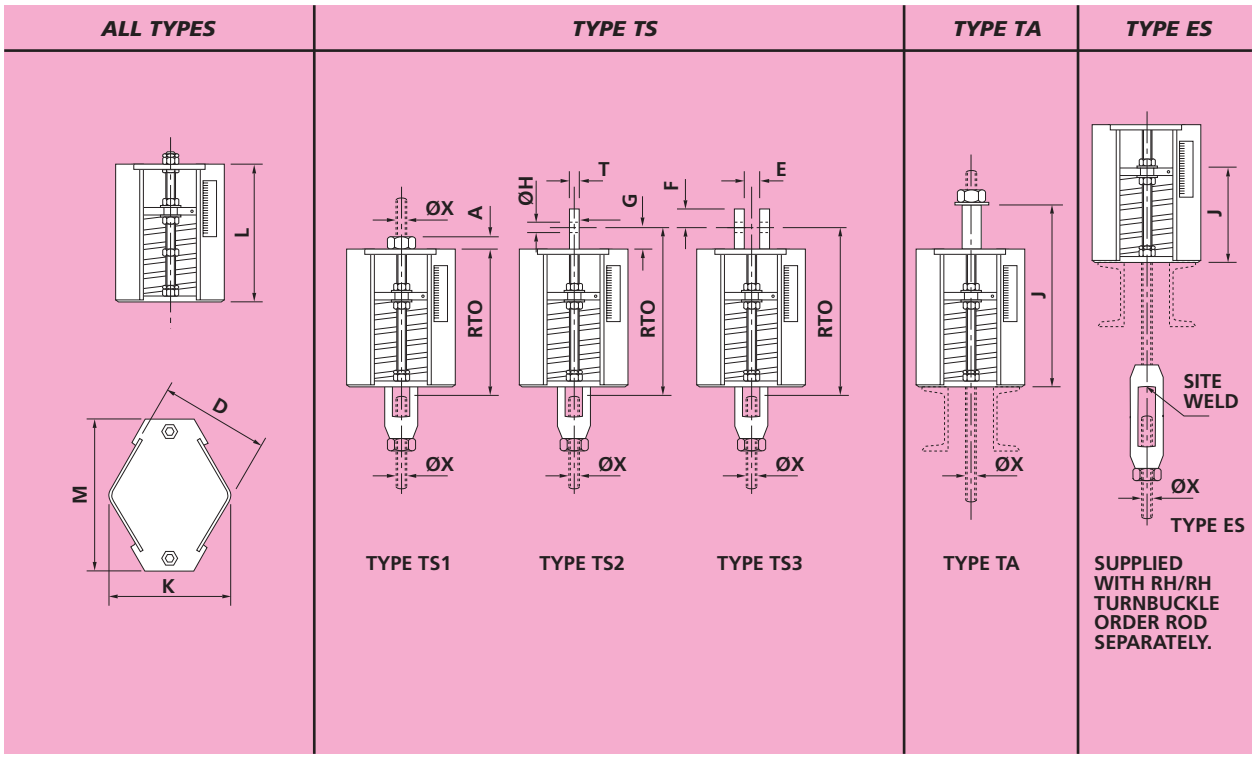

SUPPORT SIZE	ROD DIA	BODY DIMENSIONS				RTO AT MIN LOAD (mm)			DEPTH OF THR'D	LUG DIMENSIONS TYPES TS2 & TS3					WEIGHTS kgf			J AT MIN LOAD mm	WEIGHT kgf	J AT MIN LOAD mm	WEIGHT kgf
	X mm	D mm	K mm	M mm	L mm (not BM)	TS1	TS2	TS3	A mm	E mm	F mm	G mm	H mm	T mm	TS1	TS2	TS3				
V5-12	M12	177.6	188.9	200	696	694	726	726	12	20	20	30	14	6	21.6	21.8	21.9	1016	19.7	644	19.9
V5-13	M12	177.6	188.9	200	728	726	764	764	12	25	30	36	18	6	22.4	22.6	23.0	1048	20.6	676	20.7
V5-14	M12	177.6	188.9	200	780	778	816	816	12	25	30	36	18	6	24.5	24.7	25.0	1100	22.6	727	22.8
V5-15	M12	177.6	188.9	200	878	876	914	914	12	25	30	36	18	6	28.7	29.1	29.2	1198	26.9	826	27.0
V5-16	M16	246.2	263.5	320	714	711	764	764	16	30	35	50	22	10	51.0	51.5	52.2	1034	45.9	653	46.2
V5-17	M16	246.2	263.5	320	781	778	831	831	16	30	35	50	22	10	57.1	57.6	58.3	1101	51.9	720	52.2
V5-18	M16	246.2	263.5	320	822	819	872	872	16	30	35	50	22	10	61.2	61.9	62.4	1142	55.9	761	56.3

52

RANGE V5

TYPE BM

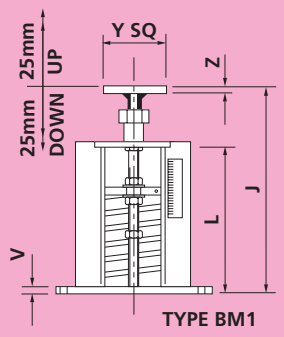

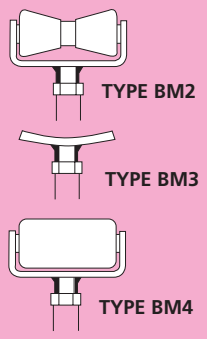

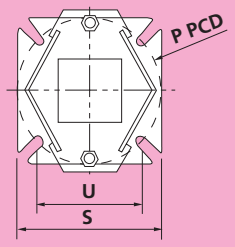

NB. INSTALLED HEIGHT 'J' DIMENSIONS FOR TYPES BM2 BM3 AND BM4 VARY WITH PIPE SIZE. PLEASE CONTACT PIPE SUPPORTS LIMITED'S DESIGN DEPARTMENT FOR DETAILS.

NOTE THAT WHERE DIMENSION 'M' EXCEEDS THE BASE PLATE SQUARE DIMENSION 'S', 'M' WILL BE THE MAX. WIDTH OF THE BASE PLATE.

TYPE DS

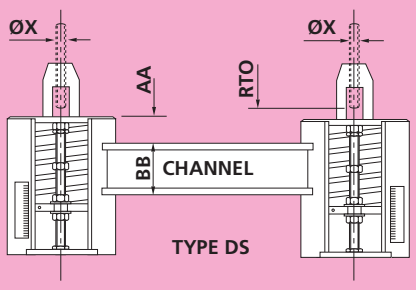

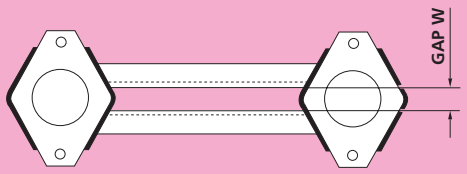

SUPPORTING EFFORT = TABULATED VALUE 2
SPRING RATE = TABULATED VALUE 2
ADD WEIGHT OF UNIT TO LOAD FROM PIPE.

SUPPORT SIZE	J AT MIN. LOAD TYPE BM1 mm	BODY L'TH L mm	BASE PLATE SQ. S mm	BASE PLATE PCD P mm	BASE BOLT CRS. SQ. U mm	BASE BOLT SIZE	BASE PLATE THK V mm	LOAD PAD SQ. Y mm	LOAD PAD THK Z mm	WEIGHT TYPE BM1 kgf	RTO AT MIN LOAD mm	DIM. M mm	GAP W mm	RSC SIZE 900 MAX CENTRES	RSC SIZE 1300 MAX CENTRES	RSC SIZE 1800 MAX CENTRES	WEIGHT kgf @ 900 CRS	WEIGHT kgf @ 1300 CRS	WEIGHT kgf @ 1800 CRS
V5-12	1060	694	200	205.1	145	M20	10	75	6	19.6	25	25	22	76 x 38	76 x 38	76 x 38	53.1	58.6	65.5
V5-13	1098	726	200	205.1	145	M20	10	75	10	21.4	25	25	26	76 x 38	76 x 38	76 x 38	54.9	60.3	67.3
V5-14	1149	777	200	205.1	145	M20	10	75	10	23.1	25	25	26	76 x 38	76 x 38	76 x 38	59.0	64.4	71.4
V5-15	1248	876	200	205.1	145	M20	10	75	10	26.5	25	25	26	76 x 38	76 x 38	76 x 38	67.6	73.1	80.0
V5-16	1082	709	270	280	198	M20	12	100	12	48.3	25	25	33	76 x 38	102 x 51	102 x 51	110.8	124.5	135.5
V5-17	1149	776	270	280	198	M20	12	100	12	53.4	25	25	33	76 x 38	102 x 51	102 x 51	122.9	136.7	147.7
V5-18	1190	817	270	280	198	M20	12	100	12	57.0	25	25	33	76 x 38	102 x 51	102 x 51	131.3	145.2	156.4

VARIABLE EFFORT SUPPORT LOAD SELECTION CHART kgf

MOVEMENT mm	V1	V2	V3	V4	V5	SPRING SIZE 1	2	3	4	5	6	7	8	9	10	11	12	13	14	15	16	17	18	19	20	21	22	23	24	25	26	27	28	29
OVERTRAVEL						2.72	4.76	7.7	10.9	12.7	16.3	18.1	29.5	36.0	47.0	62.0	79.0	110	144	202	252	357	460	609	812	1082	1461	2040	2731	3603	4795	6350	8474	11333
						2.86	4.94	7.91	11.2	13.1	16.8	18.7	30.2	37.0	48.3	63.7	81.3	113	148	207	259	366	472	625	834	1111	1500	2094	2802	3700	4922	6519	8704	11631
						3.01	5.12	8.13	11.5	13.6	17.3	19.2	30.9	38.0	49.6	65.5	83.7	116	152	213	267	375	485	642	855	1140	1539	2147	2874	3796	5049	6689	8935	11930
						3.15	5.30	8.34	11.8	14.0	17.8	19.8	31.6	39.0	50.8	67.2	86.0	119	156	218	274	385	497	658	877	1169	1578	2201	2945	3893	5176	6858	9165	12228
						3.29	5.48	8.56	12.0	14.4	18.3	20.4	32.4	40.0	52.1	68.9	88.4	122	161	224	282	394	509	674	899	1197	1618	2255	3017	3989	5304	7028	9395	12526
MIN	0	0	0	0	0	3.43	5.66	8.77	12.3	14.8	18.8	21.0	33.1	41.0	53.4	70.7	90.7	125	165	229	289	403	521	690	921	1226	1657	2309	3088	4086	5431	7197	9626	12824
						3.58	5.83	8.99	12.6	15.3	19.3	21.5	33.8	42.0	54.7	72.4	93.0	128	169	235	297	412	534	707	942	1255	1696	2362	3160	4183	5558	7367	9856	13123
						3.72	6.01	9.20	12.9	15.7	19.8	22.1	34.5	43.0	56.0	74.1	95.4	131	173	240	304	422	546	723	964	1284	1735	2416	3231	4279	5685	7536	10086	13421
W						3.86	6.19	9.42	13.2	16.1	20.3	22.7	35.2	44.0	57.3	75.9	97.7	134	177	246	312	431	558	739	986	1313	1774	2470	3303	4376	5812	7706	10317	13719
						4.01	6.37	9.63	13.5	16.6	20.8	23.3	35.9	45.0	58.5	77.6	100	137	181	251	319	440	570	755	1008	1342	1813	2523	3374	4472	5939	7875	10547	14018
	5	10	20	30	40	4.15	6.55	9.85	13.8	17.0	21.3	23.8	36.6	46.0	59.8	79.3	102	140	185	256	326	449	583	772	1029	1371	1852	2577	3445	4569	6066	8044	10777	14316
O						4.29	6.73	10.1	14.0	17.4	21.8	24.4	37.4	47.0	61.1	81.0	105	143	190	262	334	458	595	788	1051	1399	1892	2631	3517	4665	6194	8214	11008	14614
						4.44	6.91	10.3	14.3	17.9	22.3	25.0	38.1	48.0	62.4	82.8	107	146	194	267	341	468	607	804	1073	1428	1931	2684	3588	4762	6321	8383	11238	14913
R						4.58	7.09	10.5	14.6	18.3	22.8	25.6	38.8	49.0	63.7	84.5	109	149	198	273	349	477	619	820	1095	1457	1970	2738	3660	4859	6448	8553	11468	15211
						4.72	7.27	10.7	14.9	18.7	23.3	26.1	39.5	50.0	65.0	86.2	112	152	202	278	356	486	632	837	1116	1486	2009	2792	3731	4955	6575	8722	11699	15509
	10	20	40	60	80	4.86	7.45	10.9	15.2	19.1	23.8	26.7	40.2	51.0	66.2	88.0	114	155	206	284	364	495	644	853	1138	1515	2048	2846	3803	5052	6702	8892	11929	15807
K						5.01	7.62	11.1	15.5	19.6	24.3	27.3	40.9	52.0	67.5	89.7	116	158	210	289	371	505	656	869	1160	1544	2087	2899	3874	5148	6829	9061	12159	16106
						5.15	7.80	11.3	15.8	20.0	24.8	27.8	41.6	53.0	68.8	91.4	119	161	214	294	378	514	669	886	1181	1573	2126	2953	3945	5245	6956	9230	12390	16404
I						5.29	7.98	11.6	16.0	20.4	25.3	28.4	42.4	54.0	70.1	93.2	121	164	219	300	386	523	681	902	1203	1601	2166	3007	4017	5342	7084	9400	12620	16702
						5.44	8.16	11.8	16.3	20.9	25.8	29.0	43.1	55.0	71.4	94.9	123	167	223	305	393	532	693	918	1225	1630	2205	3060	4088	5438	7211	9569	12850	17001
	15	30	60	90	120	5.58	8.34	12.0	16.6	21.3	26.3	29.6	43.8	56.0	72.7	96.6	126	170	227	311	401	541	705	934	1247	1659	2244	3114	4160	5535	7338	9739	13081	17299
N						5.72	8.52	12.2	16.9	21.7	26.8	30.1	44.5	57.0	73.9	98.4	128	173	231	316	408	551	718	951	1268	1688	2283	3168	4231	5631	7465	9908	13311	17597
						5.86	8.70	12.4	17.2	22.1	27.3	30.7	45.2	58.0	75.2	100	131	176	235	322	416	560	730	967	1290	1717	2322	3222	4303	5728	7592	10078	13542	17895
G						6.01	8.88	12.6	17.5	22.6	27.8	31.3	45.9	59.0	76.5	102	133	179	239	327	423	569	742	983	1312	1746	2361	3275	4374	5824	7719	10247	13772	18194
						6.15	9.06	12.9	17.7	23.0	28.3	31.9	46.7	60.0	77.8	104	135	182	244	333	431	578	754	999	1334	1774	2401	3329	4446	5921	7847	10417	14002	18492
	20	40	80	120	160	6.29	9.24	13.1	18.0	23.4	28.8	32.4	47.4	61.0	79.1	105	138	185	248	338	438	587	767	1016	1355	1803	2440	3383	4517	6018	7974	10586	14233	18790
						6.44	9.41	13.3	18.3	23.9	29.3	33.0	48.1	62.0	80.4	107	140	188	252	343	445	597	779	1032	1377	1832	2479	3436	4588	6114	8101	10755	14463	19089
R						6.58	9.59	13.5	18.6	24.3	29.8	33.6	48.8	63.0	81.6	109	142	191	256	349	453	606	791	1048	1399	1861	2518	3490	4660	6211	8228	10925	14693	19387
						6.72	9.77	13.7	18.9	24.7	30.3	34.1	49.5	64.0	82.9	110	145	194	260	354	460	615	804	1065	1420	1890	2557	3544	4731	6307	8355	11094	14924	19685
						6.86	9.95	13.9	19.2	25.1	30.8	34.7	50.2	65.0	84.2	112	147	197	264	360	468	624	816	1081	1442	1919	2596	3598	4803	6404	8482	11264	15154	19983
A	25	50	100	150	200	7.01	10.1	14.1	19.5	25.6	31.3	35.3	50.9	66.0	85.5	114	149	200	268	365	475	634	828	1097	1464	1948	2635	3651	4874	6501	8609	11433	15384	20282
						7.15	10.3	14.4	19.7	26.0	31.8	35.9	51.7	67.0	86.8	116	152	203	273	371	483	643	840	1113	1486	1976	2675	3705	4946	6597	8737	11603	15615	20580
N						7.29	10.5	14.6	20.0	26.4	32.3	36.4	52.4	68.0	88.1	117	154	206	277	376	490	652	853	1130	1507	2005	2714	3759	5017	6694	8864	11772	15845	20878
						7.44	10.7	14.8	20.3	26.9	32.8	37.0	53.1	69.0	89.3	119	156	209	281	381	497	661	865	1146	1529	2034	2753	3812	5088	6790	8991	11941	16075	21177
						7.58	10.8	15.0	20.6	27.3	33.3	37.6	53.8	70.0	90.6	121	159	212	285	387	505	670	877	1162	1551	2063	2792	3866	5160	6887	9118	12111	16306	21475
G	30	60	120	180	240	7.72	11.0	15.2	20.9	27.7	33.8	38.2	54.5	71.0	91.9	123	161	215	289	392	512	680	889	1178	1573	2092	2831	3920	5231	6983	9245	12280	16536	21773
						7.87	11.2	15.4	21.2	28.2	34.3	38.7	55.2	72.0	93.2	124	163	218	293	398	520	689	902	1195	1594	2121	2870	3973	5303	7080	9372	12450	16766	22072
E						8.01	11.4	15.6	21.5	28.6	34.8	39.3	55.9	73.0	94.5	126	166	221	297	403	527	698	914	1211	1616	2150	2909	4027	5374	7177	9499	12619	16997	22370
						8.15	11.6	15.9	21.7	29.0	35.3	39.9	56.7	74.0	95.8	128	168	224	302	409	535	707	926	1227	1638	2178	2949	4081	5446	7273	9627	12789	17227	22668
						8.29	11.7	16.1	22.0	29.4	35.8	40.5	57.4	75.0	97.0	130	170	227	306	414	542	717	938	1243	1660	2207	2988	4135	5517	7370	9754	12958	17457	22966
MAX	35	70	140	210	280	8.44	11.9	16.3	22.3	29.9	36.3	41.0	58.1	76.0	98.3	131	173	230	310	420	550	726	951	1260	1681	2236	3027	4188	5589	7466	9881	13128	17688	23265
OVERTRAVEL						8.58	12.1	16.5	22.6	30.3	36.8	41.6	58.8	77.0	99.6	133	175	233	314	425	557	735	963	1276	1703	2265	3066	4242	5660	7563	10008	13297	17918	23563
						8.72	12.3	16.7	22.9	30.7	37.3	42.2	59.5	78.0	101	135	177	236	318	430	564	744	975	1292	1725	2294	3105	4296	5731	7660	10135	13466	18148	23861
						8.87	12.5	16.9	23.2	31.2	37.8	42.7	60.2	79.0	102	136	180	239	322	436	572	753	988	1309	1746	2323	3144	4349	5803	7756	10262	13636	18379	24160
						9.01	12.6	17.1	23.5	31.6	38.3	43.3	60.9	80.0	103	138	182	242	326	441	579	763	1000	1325	1768	2352	3183	4403	5874	7853	10389	13805	18609	24458
	40	80	160	240	320	9.15	12.8	17.4	23.7	32.0	38.8	43.9	61.7	81.0	105	140	184	245	331	447	587	772	1012	1341	1790	2380	3223	4457	5946	7949	10517	13975	18839	24756

SPRING RATE kgf/mm		1	2	3	4	5	6	7	8	9	10	11	12	13	14	15	16	17	18	19	20	21	22	23	24	25	26	27	28	29
	V1	0.143	0.179	0.215	0.285	0.429	0.500	0.573	0.715	1.00	1.28	1.73	2.34	3.00	4.15	5.44	7.44	9.22	12.27	16.27	21.73	28.85	39.15	53.7	71.4	96.6	127	169	230	298
	V2	0.071	0.090	0.107	0.143	0.215	0.250	0.287	0.357	0.500	0.641	0.866	1.17	1.50	2.07	2.72	3.72	4.61	6.13	8.13	10.87	14.43	19.57	26.85	35.72	48.29	63.6	84.7	115	149
	V3	0.036	0.045	0.054	0.071	0.107	0.125	0.143	0.179	0.250	0.321	0.433	0.585	0.750	1.04	1.36	1.86	2.30	3.07	4.07	5.43	7.21	9.79	13.43	17.86	24.15	31.79	42.36	57.6	74.6
	V4	-	-	-	-	-	-	-	-	-	0.214	0.289	0.390	0.500	0.691	0.907	1.24	1.54	2.04	2.71	3.62	-	-	-	-	-	-	-	-	-
	V5	-	-	-	-	-	-	-	-	-	-	-	0.293	0.375	0.518	0.680	0.93	1.15	1.53	-	-	-	-	-	-	-	-	-	-	-

SELECTION CHART IN NEWTONS IS SHOWN ON PAGE 43

SELECTION CHART FOR HIGH LOAD VARIABLE EFFORT SUPPORTS LOADS IN N

MOVEMENT mm				SPRING SIZE						
	V1	V2	V3	H1	H2	H3	H4	H5	H6	H7
OVERTRAVEL				55741	74276	100293	120033	140039	160692	187474
				57233	76256	102980	123194	143726	164895	192378
				58725	78237	105667	126354	147413	169099	197282
				60216	80218	108354	129514	151099	173302	202186
				61708	82198	111042	132674	154786	177506	207090
MIN	**0**	**0**	**0**	63200	84179	113729	135834	158473	181709	211994
				64692	86160	116416	138994	162160	185913	216898
				66184	88140	119103	142154	165847	190116	221802
				67675	90121	121791	145314	169534	194319	226706
				69167	92102	124478	148475	173220	198523	231610
W	**5**	**10**	**20**	70659	94083	127165	151635	176907	202726	236514
				72151	96063	129852	154795	180594	206930	241418
O				73643	98044	132540	157955	184281	211133	246322
				75134	100025	135227	161115	187968	215337	251226
R				76626	102005	137914	164275	191654	219540	256130
	10	**20**	**40**	78118	103986	140602	167435	195341	223744	261034
K				79610	105967	143289	170596	199028	227947	265938
				81102	107948	145976	173756	202715	232151	270842
I				82594	109928	148663	176916	206402	236354	275746
				84085	111909	151351	180076	210089	240558	280651
	15	**30**	**60**	85577	113890	154038	183236	213775	244761	285555
N				87069	115870	156725	186396	217462	248965	290459
				88561	117851	159412	189556	221149	253168	295363
G				90053	119832	162100	192716	224836	257371	300267
				91544	121812	164787	195877	228523	261575	305171
	20	**40**	**80**	93036	123793	167474	199037	232210	265778	310075
				94528	125774	170161	202197	235896	269982	314979
R				96020	127755	172849	205357	239583	274185	319883
				97512	129735	175536	208517	243270	278389	324787
				99003	131716	178223	211677	246957	282592	329691
A	**25**	**50**	**100**	100495	133697	180910	214837	250644	286796	334595
				101987	135677	183598	217998	254330	290999	339499
N				103479	137658	186285	221158	258017	295203	344403
				104971	139639	188972	224318	261704	299406	349307
G				106462	141620	191659	227478	265391	303610	354211
	30	**60**	**120**	107954	143600	194347	230638	269078	307813	359115
E				109446	145581	197034	233798	272765	312017	364019
				110938	147562	199721	236958	276451	316220	368923
				112430	149542	202409	240118	280138	320423	373827
				113921	151523	205096	243279	283825	324627	378731
MAX	**35**	**70**	**140**	115413	153504	207783	246439	287512	328830	383635
OVERTRAVEL				116905	155484	210470	249599	291199	333034	388539
				118397	157465	213158	252759	294885	337237	393444
				119889	159446	215845	255919	298572	341441	398348
				121380	161427	218532	259079	302259	345644	403252
	40	**80**	**160**	122872	163407	221219	262239	305946	349848	408156

		H1	H2	H3	H4	H5	H6	H7
SPRING	V1	1492	1981	2802	3160	3687	4203	4904
RATE	V2	745.9	990	1401	1580	1843	2102	2452
N/mm	V3	373	495.2	700.6	790	922	1051	1226

SELECTION CHART FOR HIGH LOAD VARIABLE EFFORT SUPPORTS LOADS IN kgf

MOVEMENT mm				SPRING SIZE						
	V1	V2	V3	H1	H2	H3	H4	H5	H6	H7
OVERTRAVEL				5684	7574	10227	12240	14280	16386	19117
				5836	7776	10501	12562	14656	16815	19617
				5988	7978	10775	12884	15032	17243	20117
				6140	8180	11049	13207	15408	17672	20617
				6292	8382	11323	13529	15784	18101	21117
MIN	**0**	**0**	**0**	6445	8584	11597	13851	16160	18529	21617
				6597	8786	11871	14173	16536	18958	22117
				6749	8988	12145	14496	16912	19386	22618
				6901	9190	12419	14818	17288	19815	23118
				7053	9392	12693	15140	17664	20244	23618
W	**5**	**10**	**20**	7205	9594	12967	15462	18040	20672	24118
				7357	9796	13241	15785	18415	21101	24618
O				7509	9998	13515	16107	18791	21530	25118
				7662	10200	13789	16429	19167	21958	25618
R				7814	10402	14063	16751	19543	22387	26118
	10	**20**	**40**	7966	10604	14337	17074	19919	22816	26618
K				8118	10806	14611	17396	20295	23244	27118
				8270	11008	14885	17718	20671	23673	27618
I				8422	11210	15159	18040	21047	24101	28118
				8574	11412	15433	18363	21423	24530	28618
	15	**30**	**60**	8726	11614	15707	18685	21799	24959	29118
N				8879	11815	15982	19007	22175	25387	29619
				9031	12017	16256	19329	22551	25816	30119
G				9183	12219	16530	19652	22927	26245	30619
				9335	12421	16804	19974	23303	26673	31119
	20	**40**	**80**	9487	12623	17078	20296	23679	27102	31619
				9639	12825	17352	20618	24055	27530	32119
R				9791	13027	17626	20941	24431	27959	32619
				9943	13229	17900	21263	24807	28388	33119
				10096	13431	18174	21585	25183	28816	33619
A	**25**	**50**	**100**	10248	13633	18448	21907	25559	29245	34119
				10400	13835	18722	22230	25934	29674	34619
N				10552	14037	18996	22552	26310	30102	35119
				10704	14239	19270	22874	26686	30531	35619
G				10856	14441	19544	23196	27062	30960	36119
	30	**60**	**120**	11008	14643	19818	23519	27438	31388	36620
E				11160	14845	20092	23841	27814	31817	37120
				11313	15047	20366	24163	28190	32245	37620
				11465	15249	20640	24485	28566	32674	38120
				11617	15451	20914	24808	28942	33103	38620
MAX	**35**	**70**	**140**	11769	15653	21188	25130	29318	33531	39120
OVERTRAVEL				11921	15855	21462	25452	29694	33960	39620
				12073	16057	21736	25774	30070	34389	40120
				12225	16259	22010	26096	30446	34817	40620
				12377	16461	22284	26419	30822	35246	41120
	40	**80**	**160**	12529	16663	22558	26741	31198	35675	41620

		H1	H2	H3	H4	H5	H6	H7
SPRING	V1	152	202	286	322	376	429	500
RATE	V2	76.1	101	143	161	188	214	250
KGF/MM	V3	38.0	50.5	71.4	80.6	94	107	125

TURN OUT THIS PAGE FOR EASE OF USE

HIGH LOAD VARIABLES

ALL TYPES

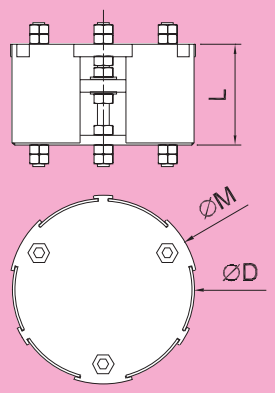

TYPE TS

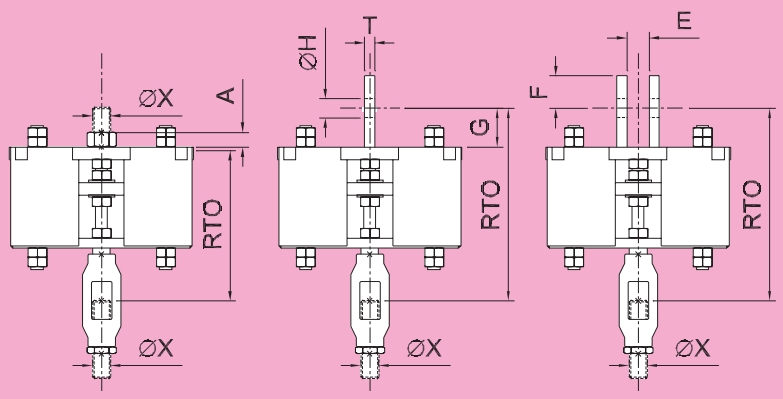

TYPE TS1 **TYPE TS2** **TYPE TS3**

SUPPORT SIZE	ROD DIA	BODY DIMENSIONS			RTO AT MIN LOAD (mm)			DEPTH OF THR'D	LUG DIMENSIONS TYPES TS2 & TS3					WEIGHTS kgf		
	X mm	⌀D mm	⌀M mm	L mm (not BM)	TS1	TS2	TS3	A mm	E mm	F mm	G mm	H mm	T mm	TS1	TS2	TS3
V1-H1	M56	630	657	353	539	690	690	56	80	115	140	68	20	386	393	400
V1-H2	M64	630	657	400	584	752	752	64	90	130	155	76	25	472	482	493
V1-H3	M72	730	757	406	577	766	766	72	100	150	175	85	25	633	645	659
V1-H4	M80	730	757	469	638	854	854	80	100	160	200	95	40	732	755	781
V1-H5	M90	730	757	479	666	884	884	90	100	160	200	95	40	814	834	860
V1-H6	M90	730	757	514	701	919	919	90	100	160	200	95	40	872	892	918
V1-H7	M100	780	807	537	722	957	957	100	110	170	215	105	40	1044	1066	1096
V2-H1	M56	730	757	431	622	773	773	56	80	115	140	68	20	532	538	546
V2-H2	M64	730	757	485	674	842	842	64	90	130	155	76	25	654	664	675
V2-H3	M72	730	757	528	704	893	893	72	100	150	175	85	25	702	714	728
V2-H4	M80	730	757	611	785	1001	1001	80	100	160	200	95	40	816	839	865
V2-H5	M90	730	757	621	813	1031	1031	90	100	160	200	95	40	909	929	955
V2-H6	M90	730	757	681	873	1091	1091	90	100	160	200	95	40	978	998	1024
V2-H7	M100	780	807	704	894	1129	1129	100	110	170	215	105	40	1167	1189	1219
V3-H1	M56	730	757	634	835	986	986	56	80	115	140	68	20	619	625	633
V3-H2	M64	730	757	717	916	1084	1084	64	90	130	155	76	25	767	777	788
V3-H3	M72	730	757	790	976	1165	1165	72	100	150	175	85	25	848	860	875
V3-H4	M80	730	757	918	1102	1318	1318	80	100	160	200	95	40	994	1018	1044
V3-H5	M90	730	757	928	1130	1348	1348	90	100	160	200	95	40	1111	1131	1157
V3-H6	M90	730	757	1041	1243	1461	1461	90	100	160	200	95	40	1215	1235	1261
V3-H7	M100	780	807	1064	1264	1499	1499	100	110	170	215	105	40	1441	1463	1493

HIGH LOAD VARIABLES

TYPE BM1

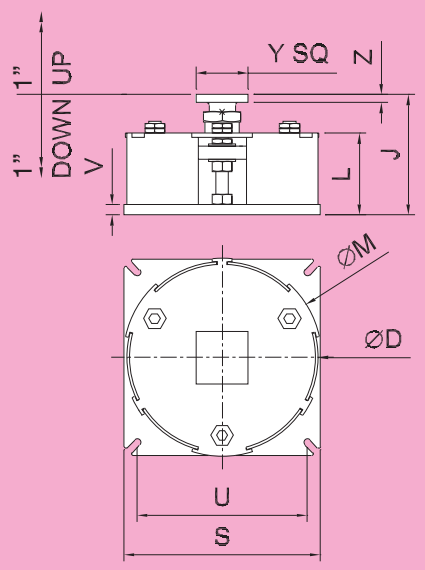

All TYPES			TYPE BM1								
SUPPORT SIZE	BODY DIMENSIONS		J AT MIN. LOAD TYPE BM1	BODY L'TH	BASE PLATE SQ.	BASE BOLT CRS. SQ.	BASE BOLT SIZE	BASE PLATE THK	LOAD PAD SQ.	LOAD PAD THK	WEIGHT TYPE BM1
	ø D mm	ø M mm	mm	L mm	S mm	U mm		V mm	Y mm	Z mm	kgf
V1-H1	630	657	408	276	650	550	M24	35	200	25	326.0
V1-H2	630	657	449	313	650	550	M24	40	200	25	383.3
V1-H3	730	757	460	313	750	650	M24	40	200	30	519.0
V1-H4	730	757	508	361	750	650	M30	50	200	30	600.8
V1-H5	730	757	558	371	750	650	M30	50	200	30	646.8
V1-H6	730	757	595	396	750	650	M30	50	200	40	672.0
V1-H7	780	807	608	409	800	700	M30	60	200	40	818.1
V2-H1	730	757	526	354	750	650	M24	35	200	25	458.9
V2-H2	730	757	574	398	750	650	M24	40	200	25	545.8
V2-H3	730	757	622	435	750	650	M24	40	200	30	586.9
V2-H4	730	757	690	503	750	650	M30	50	200	30	681.9
V2-H5	730	757	740	513	750	650	M30	50	200	30	737.5
V2-H6	730	757	802	563	750	650	M30	50	200	40	772.9
V2-H7	780	807	815	576	800	700	M30	60	200	40	933.6
V3-H1	730	757	809	557	750	650	M24	35	200	25	543.6
V3-H2	730	757	886	630	750	650	M24	40	200	25	658.1
V3-H3	730	757	964	697	750	650	M24	40	200	30	729.9
V3-H4	730	757	1077	810	750	650	M30	50	200	30	853.4
V3-H5	730	757	1127	820	750	650	M30	50	200	30	929.0
V3-H6	730	757	1242	923	750	650	M30	50	200	40	996.7
V3-H7	780	807	1255	936	800	700	M30	60	200	40	1190.2

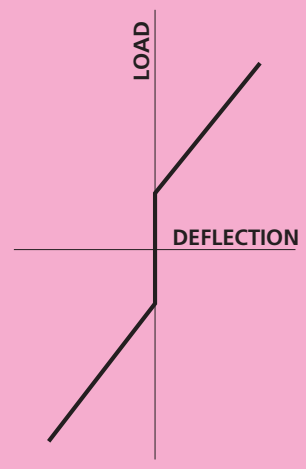

LOAD CHARACTERISTIC

Fig. 1

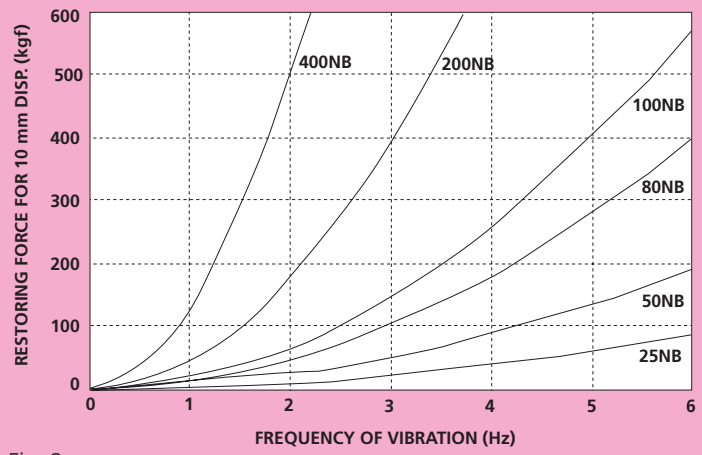

Fig. 2

DESCRIPTION

Sway Braces are essentially a double-acting spring, housed in a canister. Unlike variable effort supports, Sway Braces are not intended to carry the weight of pipework; their purpose is to limit undesirable movement.

Sway Braces act like a rigid strut until a small preload is reached, whereafter the restraining force increases in proportion to the applied deflection. Fig. 1

Undesirable movement can occur due to many phenomena, such as wind loading, sympathetic vibration, rapid valve closure, relief valves opening, two phase flow or earthquake. It may be necessary to limit this type of deflection to prevent the generation of unacceptable stresses and equipment loadings.

The Sway Brace is a cost-effective means of limiting pipework deflection. It should be noted however that it does provide some resistance to the thermal movement of the pipework and care should be taken when specifying to ensure that this is acceptable. Installation of Sway Braces will have the effect of raising the fundamental frequency of vibration of a pipework system; this is likely to reduce undesirable deflections.

Sway Braces are often used to solve unforeseen problems of resonant vibration.

For situations where the resistance to thermal movement provided by Sway Braces is unacceptable, you are referred to Pipe Supports Group's range of hydraulic snubbers and dampers.

THE PIPE SUPPORTS RANGE OF SWAY BRACES

Pipe Supports Group offer a range of eight Sway Braces, all of which limit movement to a maximum of 70mm in either direction. Preloads range from 14 kgf to 1040 kgf and corresponding maximum loads from 85 to 6170 kgf.

SELECTION

Care should be taken when selecting to ensure the Sway Brace provides sufficient force to limit the deflection caused by the dynamic occurrence, but not so much as to unduly restrain the thermal movement of the piping. Ideally selections should be checked by analysis.

The following notes are intended only as a guide:

1. Calculate the load imposed upon the pipework by the Sway Brace if the pipework expands in its normal (unrestrained) manner.

   $$P = Lp + K\,x$$

   Where **Lp** is the preload (kgf)
   K is the spring rate (kgf/mm)
   x is the deflection at the attachment position (mm) in the axis of the brace
2. Check whether this is acceptable; as a guide, consider what change in effort would be acceptable at a spring support location on the pipework: this may be 25% of the load at a support location.
3. Estimate the force required to restrain the pipework. If the pipework is vibrating with frequency **f** Hz at a maximum displacement (half amplitude) of **x** mm then, in simple harmonic motion, the **restoring force** exerted by the pipework at maximum displacement (kgf)

   $$= \frac{4\pi^2 f^2 m x}{1000\,g}$$

   Where **m** is the equivalent mass of the pipework in kg.

   It is likely that a Sway Brace having a preload greater than this value willfully restrain the pipe at the support location, while a Sway Brace for which this value is greater than the preload, but less than the max. load will have a significant effect.

Given a pipe which is vibrating at a known frequency with a known maximum displacement, the restoring force can be estimated if an assessment of the equivalent mass of the pipe can be made. Unfortunately, it is not very easy to do this with such accuracy without performing a dynamic analysis of the pipework. The equivalent mass will depend upon the length of pipework between anchors, the route of the pipework and the mode of vibration. Obviously any additional masses such as valves or flanged connections will also have an effect.

Figure 2 shows restoring forces for a 10mm deflection of empty unlagged schedule 40 pipe, for which the equivalent mass is arbitrarily taken as 25m of pipe.

SWAY BRACES

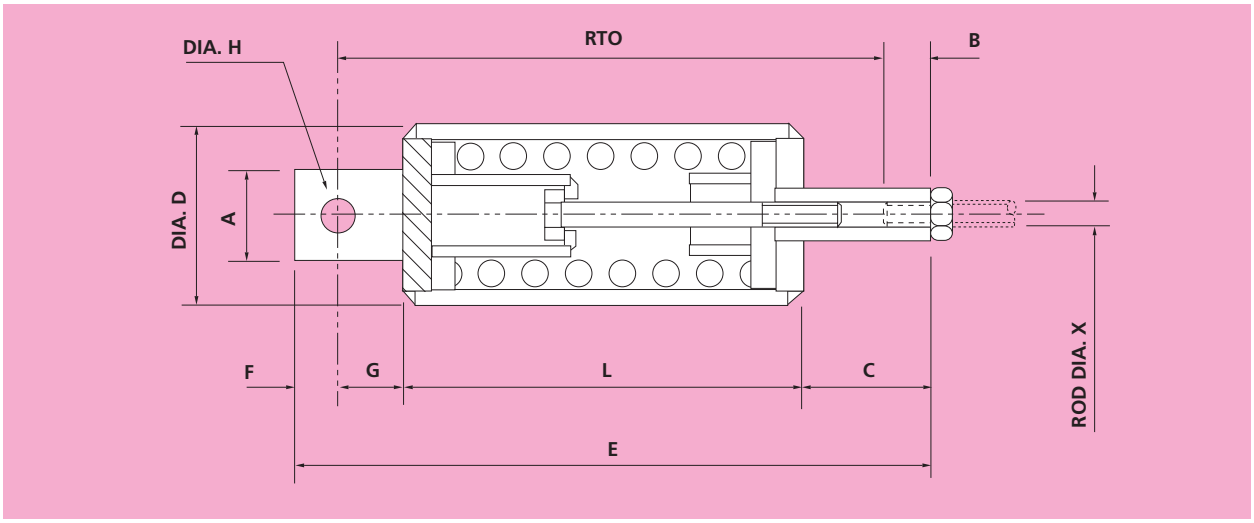

SIZE	SB1	SB2	SB3	SB4	SB5	SB6	SB7	SB8
PRELOAD kgf	14	45	140	300	400	535	770	1040
MAX LOAD kgf	85	260	800	1860	2470	3340	4620	6170
RATE kgf/mm	1.0	3.1	9.5	22.3	29.6	40.1	55.1	73.2
PRELOAD N	137	441	1370	2940	3920	5250	7550	10200
MAX. LOAD N	834	2550	7850	18240	24220	32750	45310	60510
RATE N/mm	9.8	30.4	93.2	219	290	393	540	718
RTO mm	308	305	311	359	395	406	447	495
ROD SIZE X	M20	M24	M24	M30	M36	M36	M42	M48
A mm	80	80	80	100	100	100	110	130
B mm	25	30	30	38	45	45	53	60
C mm	80	80	78	75	95	90	100	105
DIA. D mm	102	102	152	168	168	219	219	219
E mm	378	380	386	462	505	516	575	640
F mm	45	45	45	65	65	65	75	85
G mm	60	60	60	80	80	80	90	105
DIA. H mm	26	26	26	39	39	39	45	52
L mm	193	195	203	242	265	281	310	345
WEIGHT kgf	6.8	7.6	16	27	31	51	60	73

STANDARD DESIGN FEATURES

1. Rugged construction.
2. Compact design.
3. Spring preloaded.
4. 70 mm of travel in both directions.
5. Supplied with plastic coated spring coils, galvanised threaded items and painted casings.

NON STANDARD DESIGN FEATURES

1. Sway Braces are available in all the corrosion-resistant materials and finishes which are applicable to our range of variable effort supports.
2. Special units to suit particular preload and spring rate requirements are available. Please contact our design department for details.

ORDERING INFORMATION

1. Size
2. Finish if other than Pipe Supports Group standard.
3. Thread form if other than isometric coarse.
4. Mark No. (if known).

INSTALLATION AND ERECTION

1. It is recommended that Sway Braces are installed in conjunction with a tubular strut, since they work both in tension and compression.
2. The unit should be installed so that it does not apply undue force in the installed (hot condition). The imposed loads will then apply in the cold condition.

MAINTENANCE

Periodic inspection should be made at intervals to suit the operating environment. Check for visual damage, corrosion and wear.

VARIABLE EFFORT SUPPORT

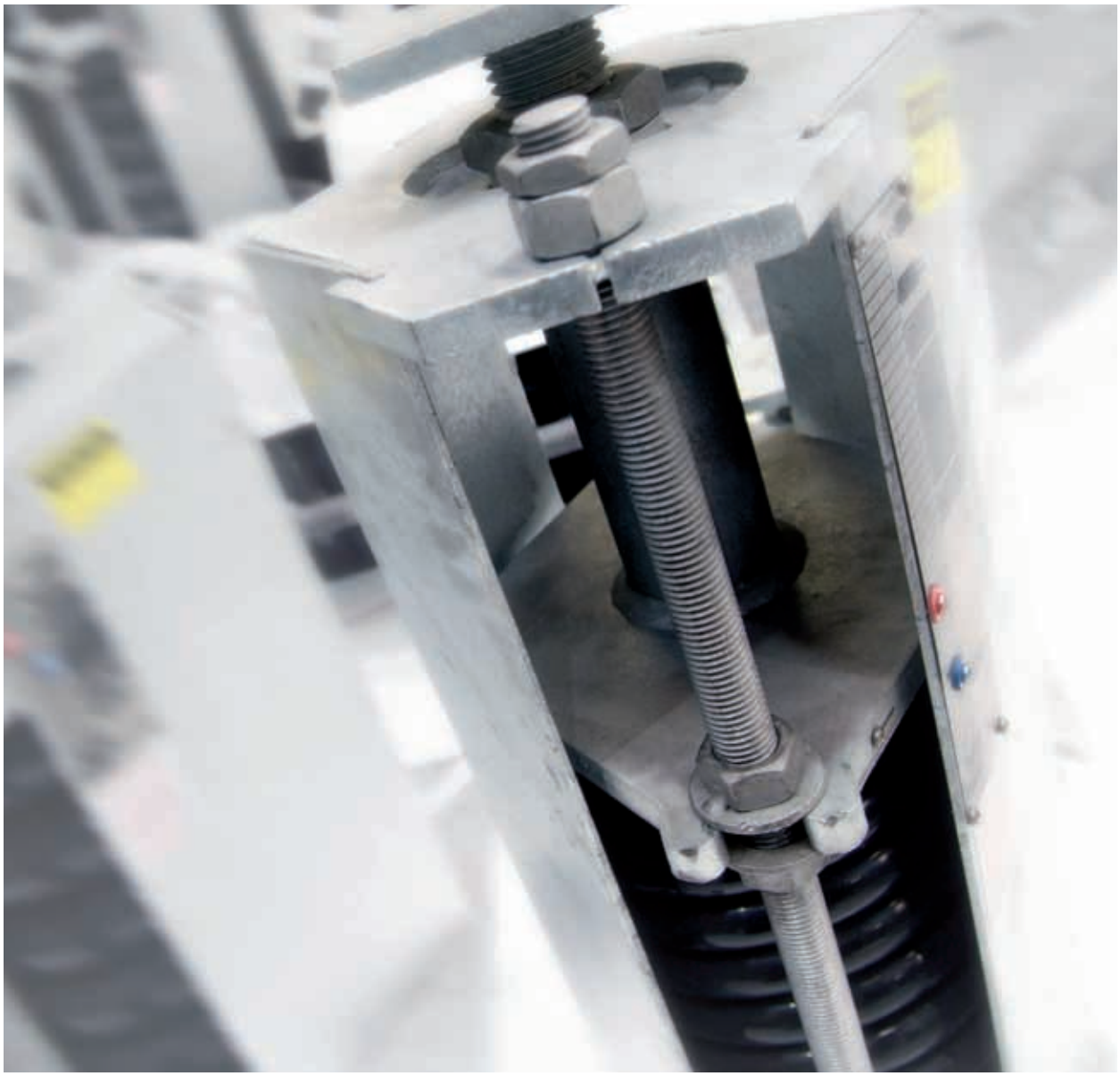

Index

64 — 114 LUG ATTACHMENT

122 BEAM WELDING ATTACHMENT

122A BEAM WELDING ATTACHMENT FOR USE WITH DUAL FACED ROCKER WASHER

65 — 125 INVERTED BEAM WELDING ATTACHMENT

130 CEILING PLATE

230 EYE ROD

66 — 226 & 227 HANGER ROD & ALL THREAD ROD

277 LOCKNUT

278 FULL NUT

279 FLAT WASHER

67 — 234 ROD COUPLING

235 TURNBUCKLE

236 SPHERICAL WASHER

68 — 280 CUP FOR SPHERICAL WASHER

281 DUAL FACED ROCKER WASHER

282 PLATE FOR DUAL FACED ROCKER WASHER

69 — 238 CLEVIS

274 CLEVIS PIN

239 WELDLESS EYE NUT

70 — PC2 TWO BOLT PIPE CLAMP

77 — PC3 THREE BOLT PIPE CLAMP

99 — RC4 & RC6 RISER CLAMPS

117 — FPR FLAT PLATE TYPE RISER CLAMP

133 — PB PIPE CLAMP BASES

140 — 486 SPREADER BEAM — I — BEAM TYPE

141 — 487 SPREADER BEAM — TWIN CHANNEL TYPE

PIPE CLAMPS AND ANCILLARIES — LOAD GROUP BASIS

This section covers components that have been designed with standardized load carrying capacities that are compatible with metric hanger rods. The components in this section are assigned to load groups; this simplifies selection and leads to cost-effective designs. For example, if all components in the load chain are selected as load group 5, the load carrying capacity of each item, and therefore of the whole assembly, will be 2280kgf; the load carrying capacity of an M24 hanger rod. Riser clamps and spreader beams are designed to sustain the standard load capacities on each rod.

SELECTION OF COMPONENTS

The selection of beam attachments, hanger rods and rod attachments, spreader beams and other items which are not within the pipework's thermal insulation (lagging) and are therefore not exposed to the pipe temperature is achieved simply be referring to the load capacity for each load group and selecting the component accordingly. Load capacities for standard rod sizes are given below:

Load Group	Rod Size	Load Capacity kgf	Load Capacity kN
0	M8	230	2.3
1	M10	360	3.5
2	M12	530	5.3
3	M16	1010	9.9
4	M20	1580	15.5
5	M24	2280	22.4
6	M30	3650	35.8
7	M36	5340	52.4
8	M42	7400	72.6
9	M48	9650	94.6
10	M56	13350	130.9
11	M64	18000	176.5
12	M72	23025	225.8
13	M80	28125	275.8

The three bolt pipe clamps, riser clamps, and pipe bases are given a part number, which incorporates both the load group and the design temperature of the item concerned.

For example:

Part number:	PC3 – 200 – 5 – 560
PC3	— Three Bolt Pipe Clamp
200	— 200mm Pipe Size
5	— Load Group 5
560	— 560°C Design Temperature

Because the pipe clamp is made from standard components, the load capacity at design temperature is likely to be slightly greater than the standard load capacity for the given load group. In the above example, the load capacity at 560°C is 2410kgf, whereas the standard load capacity is 2280kgf. Note also that load capacities are also given at temperatures above and below the design temperature for the clamp. Load capacities at intermediate temperatures can be obtained by interpolation. Do not select items for use at a temperature above the maximum temperature for which a load capacity is quoted for the item in question.

Is is important to note that in order to make the most efficient and cost effective selection of pipe clamp, riser clamp or pipe base, it may be necessary to consider several possible selections. If the design temperature of the clamp is in between the standard design temperatures, it may be possible to make a more cost effective selection either by considering the clamp for a lower load group or a lower temperature

e.g. Pipe size = 250 N.B., Load = 1700kgf, Pipe temperature = 540°C

Consider the following three bolt pipe clamps:

PC3-250-4-530	Load capacity = 1673kgf (by interpolation)	No good
PC3-250-4-560	Load capacity = 1830kgf	OK
PC3-250-5-530	Load capacity = 2226kgf (by interpolation)	OK
PC3-250-5-560	Load capacity = 2720kgf	OK

Any of the last three clamps is an acceptable selection. If you simply select a clamp where the standard clamp design temperature exceeds the pipe temperature and the standard load group load capacity exceeds the actual load, you will select PC3-250-5-560, but this is not the most economic selection. In this example either PC3-250-4-560 or PC3-250-5-530 is a more efficient selection than PC3-250-5-560.

So when selecting components to make a pipe support assembly, you can choose a pipe clamp which has a different load group to the hanger rod. This situation may also arise when using variable effort supports, which have standard rod sizes to suit the maximum load on the spring.

In designing and developing this range of pipe clamps and ancillary items, we at Pipe Supports Group have paid particular attention to compatibility of components across load groups. On the tabulations for pipe clamps and riser clamps, the compatible rod sizes are given. This is based on use with our standard pattern weldless eye nut, (or standard pattern clevis for flat plate type riser clamps).

All Pipe Supports Group's standard pipe clamps and ancillaries are designed to withstand an increased short term load, such as occurs during hydrostatic test, up to twice the quoted load capacity for the item.

When using high temperature pipe chairs in conjunction with spreader beams, it may be desirable to specify load bearing insulation between the chair and the beam. Provided that the beam is not within the lagging, the temperature drop to the beam should mean that the beam itself will not be hot enough to significantly reduce its strength, but for reasons of personnel protection or thermal efficiency, load bearing insulation may be judged to be necessary.

Certain sizes of carbon steel pipe clamps are kept in stock to enable us to supply these items on very short lead times. The part numbers for these items are shown in bold in the tabulations.

STANDARDS

The pipe clamps and riser clamps included in this section have been designed in accordance with ASME B31.1/MSS-SP58. Load capacities for metric hanger rods have been taken from BS3974 (now replaced by BSEN 13480 part 3). Most of the other components are BS3974 standard items; stress levels also complying with ASME B31.1/MSS-SP58. Where components are not BS3974 standard items, they have been designed in accordance with ASME B31.1/MSS-SP58.

PIPE CLAMPS AND ANCILLARIES — LOAD GROUP BASIS

MATERIALS

Pipe Supports Group manufactures at a number of sites worldwide. Materials are selected from the following equivalent or similar specifications suiting availability at the site of manufacture:

Carbon Steel Items manufactured from Plate or sections, Pipe Clamps to 400°C

IS	IS:2062
ASTM	ASTM A36
JIS	JIS G3101 SS400
Euro	BS EN10025: S275JR

Carbon Steel Hanger Rods

IS	IS: 2062
ASTM	ASTM A36
JIS	JIS G3101 SS400
Euro	BS EN10025: S275JR/S355JR

Carbon Steel for Forgings

IS	IS: 1875 Gr. 2
ASTM	ASTM A105
JIS	JIS G3202 SFVC2A
Euro	BS 970 Grade 080A27

Carbon Steel bolts and nuts

IS	IS: 1367 (Part III) Gr. 4.6 and IS: 1367 (Part VI) Gr. 4
ASTM	ASTM A307 Gr.B
Euro	BS 4190/DIN 601 Gr. 4.6 and BS 4190/DIN 555 Gr. 4

We also design and manufacture pipe clamps and ancillaries in other materials to suit particular applications. Examples of this are:

Hanger rods and ancillaries in alloy steel for boiler integral pipework.
Low temperature carbon steel grades.
Austenitic stainless steel for corrosion resistance, cryogenic or high temperature service.
Nickel alloys.

FINISH

The standard finish for pipe clamps and ancillary items is self colour. Other available finishes are:

Hot dip galvanised
Zinc plated
Zinc phosphate primer
Zinc silicate primer
Corrosion resistant paint finishes to customer specifications.

THREAD FORM

All threaded components are supplied ISO metric coarse unless otherwise stated. Other thread forms can be supplied at extra cost.

114 LUG ATTACHMENT

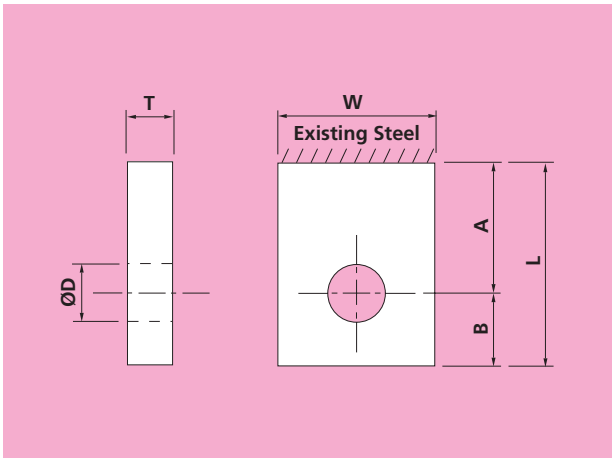

PART NUMBER	PIN DIA	D DIA	A	B	W×L×T	WEIGHT kgf	LOAD CAPACITY kgf	LOAD CAPACITY kN	LOAD GROUP
F114M08	8	10	30	20	50×50×6	0.11	230	2.3	0
F114M10	10	12	30	20	50×50×6	0.11	360	3.5	1
F114M12	12	14	30	20	50×50×8	0.15	530	5.2	2
F114M16	16	18	42	30	60×72×10	0.32	1010	9.9	3
F114M20	20	22	50	35	60×85×10	0.37	1580	15.5	4
F114M24	24	26	60	45	80×105×12	0.74	2280	22.4	5
F114M30	30	33	70	55	100×125×15	1.4	3650	35.8	6
F114M36	36	39	80	65	100×145×20	2.1	5340	52.4	7
F114M42	42	45	90	75	110×165×25	3.3	7400	72.6	8
F114M48	48	52	105	85	130×190×25	4.4	9650	94.6	9
F114M56	56	60	120	100	150×220×30	7.1	13350	130.9	10
F114M64	64	68	140	115	180×255×35	11.6	18000	176.5	11
F114M72	72	76	155	130	200×285×40	16.5	23025	225.8	12
F114M80	80	85	175	150	240×325×40	22.7	28125	275.8	13

Material: Carbon Steel

122 BEAM WELDING ATTACHMENT

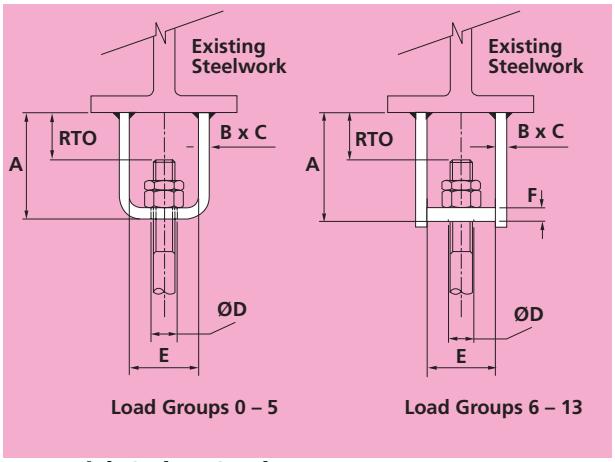

PART NUMBER	ROD SIZE	A	B	C	D	E	F	R.T.O.	WEIGHT kgf	LOAD CAPACITY kgf	LOAD CAPACITY kN	LOAD GROUP
F122M08	8	75	50	6	10	40	—	31	0.45	230	2.3	0
F122M10	10	75	50	6	12	40	—	36	0.44	360	3.5	1
F122M12	12	75	50	6	14	40	—	33	0.44	530	5.2	2
F122M16	16	85	75	10	18	60	—	39	1.3	1010	9.9	3
F122M20	20	85	75	12	22	70	—	25	1.7	1580	15.5	4
F122M24	24	115	100	12	27	75	—	51	2.8	2280	22.4	5
F122M30	30	125	125	15	33	100	15	54	5.3	3650	35.8	6
F122M36	36	165	150	20	39	125	20	72	11.0	5340	52.4	7
F122M42	42	195	150	20	46	135	20	95	12.6	7400	72.6	8
F122M48	48	210	150	20	52	150	25	79	14.5	9650	94.6	9
F122M56	56	240	200	20	60	180	25	78	22.4	13350	130.9	10
F122M64	64	250	200	20	68	215	30	80	25.9	18000	176.5	11
F122M72	72	275	200	25	76	230	40	90	36.2	23025	225.8	12
F122M80	80	300	220	25	85	250	40	100	43.1	28125	275.8	13

Material: Carbon Steel

122A BEAM WELDING ATTACHMENT FOR USE WITH DUAL FACED ROCKING WASHER

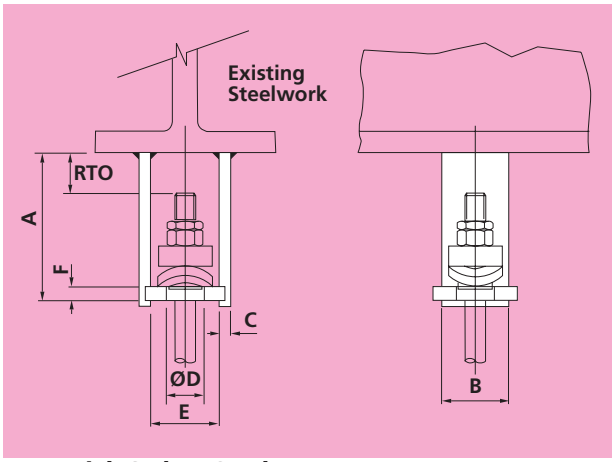

PART NUMBER	ROD SIZE	A	B	C	D	E	F	R.T.O.	WEIGHT kgf	LOAD CAPACITY kgf	LOAD CAPACITY kN	LOAD GROUP
F122AM12	12	103	50	6	38	70	10	25	0.83	530	5.2	2
F122AM16	16	107	75	10	38	70	10	25	1.6	1010	9.9	3
F122AM20	20	176	75	12	49	85	12	50	3.2	1580	15.5	4
F122AM24	24	183	100	12	49	85	15	50	4.4	2280	22.4	5
F122AM30	30	207	125	15	66	120	15	50	8.0	3650	35.8	6
F122AM36	36	219	150	20	66	120	20	50	13.1	5340	52.4	7
F122AM42	42	242	150	20	74	140	25	50	15.3	7400	72.6	8
F122AM48	48	259	150	20	82	160	25	50	17.4	9650	94.6	9
F122AM56	56	283	200	20	93	180	25	50	25.3	13350	130.9	10
F122AM64	64	309	200	25	104	210	30	50	35.8	18000	176.5	11

Material: Carbon Steel

125 INVERTED BEAM WELDING ATTACHMENT

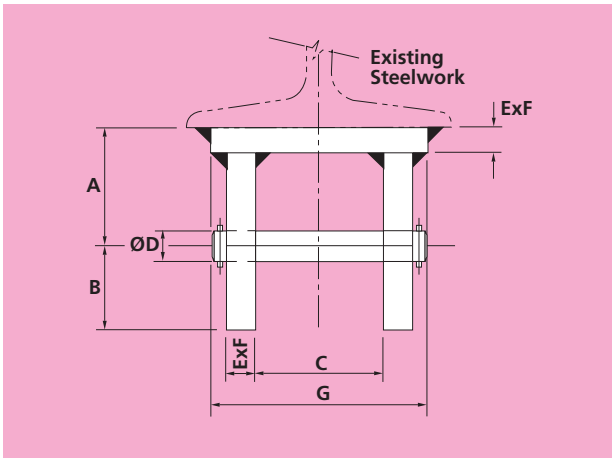

Material: Carbon Steel

PART NUMBER	PIN SIZE	A	B	C	ØD	E×F	G	WEIGHT kgf	LOAD CAPACITY kgf	LOAD CAPACITY kN	LOAD GROUP
F125M08	8	36	20	30	10	50×6	54	0.38	230	2.3	0
F125M10	10	36	20	30	12	50×6	54	0.39	360	3.5	1
F125M12	12	36	20	30	14	50×6	54	0.40	530	5.2	2
F125M16	16	42	30	30	18	50×6	54	0.51	1010	9.9	3
F125M20	20	60	35	35	22	60×10	71	1.1	1580	15.5	4
F125M24	24	70	45	40	26	80×10	76	2.0	2280	22.4	5
F125M30	30	82	55	40	32	100×12	80	3.5	3650	35.8	6
F125M36	36	95	65	55	39	110×15	101	5.8	5340	52.4	7
F125M42	42	105	75	65	45	130×15	115	7.9	7400	72.6	8
F125M48	48	125	85	70	51	150×20	130	13.6	9650	94.6	9
F125M56	56	140	100	80	60	180×20	140	18.7	13350	130.9	10
F125M64	64	160	115	90	68	200×20	154	24.2	18000	176.5	11
F125M72	72	180	130	100	76	220×25	174	35.5	23025	225.8	12
F125M80	80	200	150	100	84	240×25	180	43.0	28125	275.8	13

130 CEILING PLATE

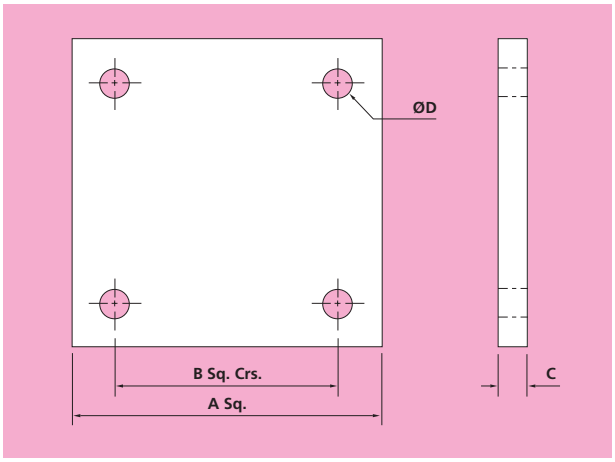

Material: Carbon Steel

PART NUMBER	ROD SIZE	A	B	C	DIA. D	RECOMMENDED FIXING BOLT	WEIGHT kgf	LOAD CAPACITY kgf	LOAD CAPACITY kN	LOAD GROUP
F130M08	8	130	100	8	9	F287–M8/95	1.1	230	2.3	0
F130M10	10	130	100	8	9	F287–M8/95	1.1	360	3.5	1
F130M12	12	150	120	8	9	F287–M8/95	1.4	530	5.2	2
F130M16	16	170	140	12	9	F287–M8/95	2.7	1010	9.9	3
F130M20	20	190	150	15	12	F287–M10/110	4.3	1580	15.5	4
F130M24	24	220	180	20	14	F287–M12/145	7.6	2280	22.4	5
F130M30	30	270	220	20	18	F287–M16/165	11.5	3650	35.8	6
F130M36	36	320	260	25	22	F287–M20/200	20.1	5340	52.4	7
F130M42	42	370	300	30	26	F288–M16/50	32.3	7400	72.6	8
F130M48	48	450	360	35	31	F288–M20/60	55.7	9650	94.6	9
F130M56	56	580	480	40	35	F288–M24/60	105.7	13350	130.9	10
F130M64	64	580	480	45	35	F289–M20×220/60	118.9	18000	176.5	11

FOR USE IN CONJUNCTION WITH PART NUMBER 114, 122, 122A OR 125

WHEN ORDERED WITH ONE OF THESE PARTS, THIS IS SUPPLIED AS A WELDED ASSEMBLY

230 EYE ROD

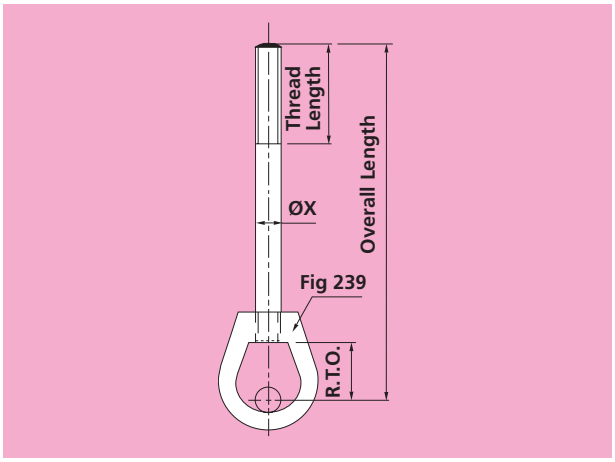

Material: Forged Steel and Carbon Steel

PART NUMBER	DIA X	R.T.O.	LOAD CAPACITY kgf	LOAD CAPACITY kN	LOAD GROUP
F230M08	8	34	230	2.3	0
F230M10	10	33	360	3.5	1
F230M12	12	45	530	5.2	2
F230M16	16	43	1010	9.9	3
F230M20	20	69	1580	15.5	4
F230M24	24	67	2280	22.4	5
F230M30	30	80	3650	35.8	6
F230M36	36	77	5340	52.4	7
F230M42	42	138	7400	72.6	8
F230M48	48	135	9650	94.6	9
F230M56	56	131	13350	130.9	10
F230M64	64	127	18000	176.5	11
F230M72	72	186	23025	225.8	12
F230M80	80	182	28125	275.8	13

ORDER BY:
PART NUMBER AND OVERALL LENGTH AS SHOWN

FOR THREAD LENGTH, SEE TYPE 226 HANGER ROD

226 HANGER ROD

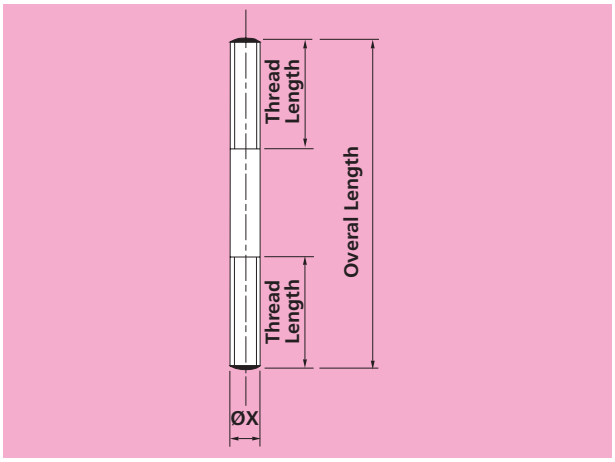

227 ALL THREAD ROD

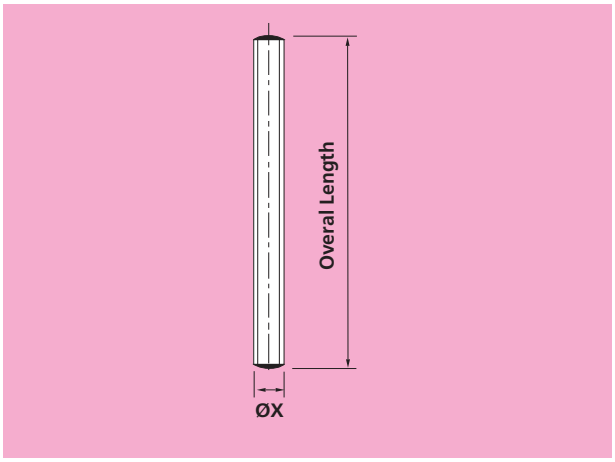

Material: Carbon Steel

Material: Carbon Steel

HANGER ROD PART NUMBER	ALL THREAD ROD PART NUMBER	DIA X	LOAD CAPACITY kgf	LOAD CAPACITY kN	LOAD GROUP	STANDARD THREAD LENGTHS FOR TYPE 226 HANGER RODS WHEN USED WITH COMPONENTS SHOWN: VARIABLE EFFORT SUPPORT	TURN BUCKLE & NUT	ROD COUPLING & NUT	CLEVIS & NUT	WELDLESS EYE & NUT	WELDLESS EYE (ONLY)	TWO NUTS
F226M08	F227M08	8	230	2.3	0	—	100	23	40	24	16	64
F226M10	F227M10	10	360	3.5	1	—	100	24	41	25	16	66
F226M12	F227M12	12	530	5.2	2	182	106	29	43	28	17	70
F226M16	F227M16	16	1010	9.9	3	191	115	39	46	31	17	76
F226M20	F227M20	20	1580	15.5	4	199	123	47	49	45	28	132
F226M24	F227M24	24	2280	22.4	5	210	134	55	52	48	28	138
F226M30	F227M30	30	3650	35.8	6	228	152	70	57	72	47	148
F226M36	F227M36	36	5340	52.4	7	243	167	85	71	77	47	158
F226M42	F227M42	42	7400	72.6	8	248	172	95	79	92	57	168
F226M48	F227M48	48	9650	94.6	9	267	191	104	96	96	57	226
F226M56	F227M56	56	13350	130.9	10	293	217	126	116	103	57	240
F226M64	F227M64	64	18000	176.5	11	299	223	147	122	109	57	252
F226M72	F227M72	72	23025	225.8	12	320	244	164	149	148	89	266
F226M80	F227M80	80	28125	275.8	13	336	260	180	165	154	89	278

ORDER BY: PART NUMBER AND OVERALL LENGTH

277 LOCKNUT

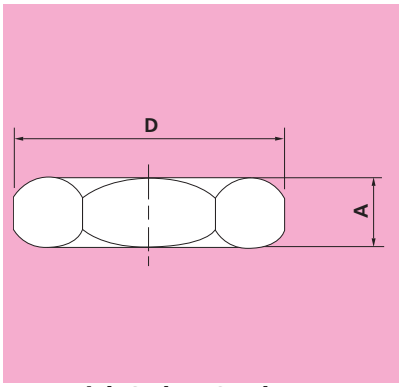

278 FULL NUT

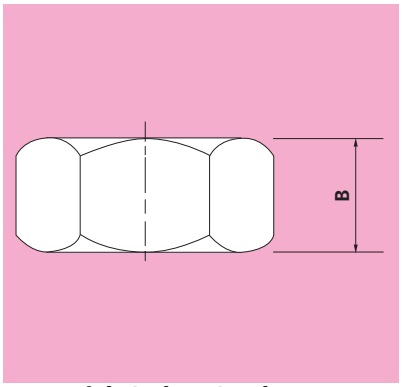

279 FLAT WASHER

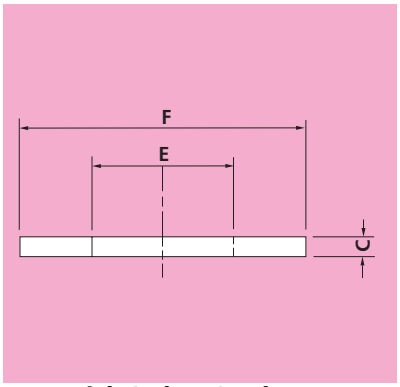

Material: Carbon Steel

Material: Carbon Steel

Material: Carbon Steel

LOCKNUT PART NUMBER	FULL NUT PART NUMBER	FLAT WASHER PART NUMBER	THREAD SIZE	A	B	C	D	E	F	LOAD GROUP	WEIGHTS kgf: LOCKNUT	FULL NUT	WASHER
F277M08	F278M08	F279M08	M8	5	6.5	1.6	15	9	17	0	0.004	0.005	0.002
F277M10	F278M10	F279M10	M10	6	8.0	2.0	20	11	21	1	0.009	0.011	0.004
F277M12	F278M12	F279M12	M12	7	10.0	2.5	22	14	24	2	0.011	0.016	0.006
F277M16	F278M16	F279M16	M16	8	13.0	3.0	28	18	30	3	0.019	0.031	0.011
F277M20	F278M20	F279M20	M20	9	16.0	3.0	35	22	37	4	0.034	0.061	0.016
F277M24	F278M24	F279M24	M24	10	19.0	4.0	42	26	44	5	0.054	0.104	0.031
F277M30	F278M30	F279M30	M30	12	24.0	4.0	53	33	56	6	0.105	0.211	0.051
F277M36	F278M36	F279M36	M36	14	29.0	5.0	64	39	66	7	0.181	0.374	0.088
F277M42	F278M42	F279M42	M42	16	34.0	7.0	75	45	78	8	0.285	0.606	0.150
F277M48	F278M48	F279M48	M48	18	38.0	8.0	87	52	92	9	0.440	0.928	0.284
F277M56	F278M56	F279M56	M56	22	45.0	9.0	99	62	105	10	0.675	1.380	0.399
F277M64	F278M64	F279M64	M64	24	51.0	9.0	110	70	115	11	0.876	1.861	0.463
F277M72	F278M72	F279M72	M72	28	58.0	10.0	120	78	125	12	1.023	2.197	0.569
F277M80	F278M80	F279M80	M80	32	64.0	12.0	131	86	140	13	1.324	2.825	0.781

234 ROD COUPLING

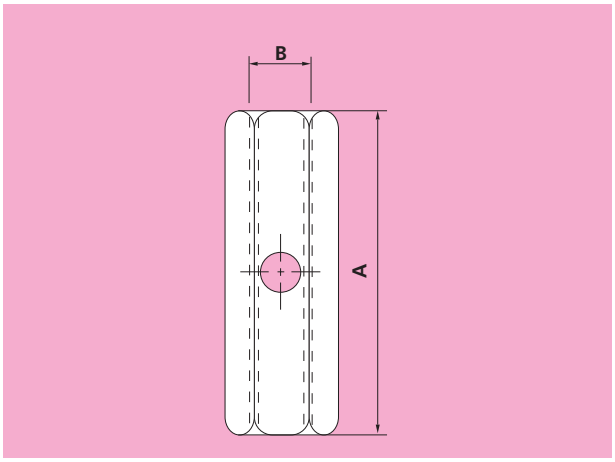

PART NUMBER	ROD SIZE B	LENGTH A	SIGHT HOLE Ø	WEIGHT kgf	LOAD CAPACITY kgf	LOAD CAPACITY kN	LOAD GROUP
F234M08	8	30	6	0.04	230	2.3	0
F234M10	10	30	6	0.04	360	3.5	1
F234M12	12	36	6	0.06	530	5.2	2
F234M16	16	50	8	0.1	1010	9.9	3
F234M20	20	60	10	0.2	1580	15.5	4
F234M24	24	70	12	0.4	2280	22.4	5
F234M30	30	90	12	0.8	3650	35.8	6
F234M36	36	110	12	1.4	5340	52.4	7
F234M42	42	120	14	2.1	7400	72.6	8
F234M48	48	130	14	3.2	9650	94.6	9
F234M56	56	160	14	4.9	13350	130.9	10
F234M64	64	190	14	6.9	18000	176.5	11
F234M72	72	210	14	9.7	23025	225.8	12
F234M80	80	230	14	13.1	28125	275.8	13

Material: Carbon Steel

235 TURNBUCKLE THREADED RIGHT HAND/LEFT HAND
235A TURNBUCKLE THREADED RIGHT HAND BOTH ENDS

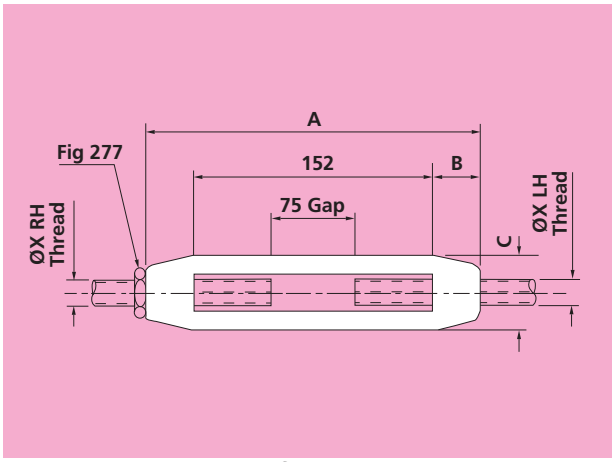

PART NUMBER RH/LH	PART NUMBER RH/RH	ROD DIA X	A	B	C	Wt. kgf	LOAD CAPACITY kgf	LOAD CAPACITY kN	LOAD GROUP
F235M08	F235AM08	8	182	15	28	0.50	230	2.3	0
F235M10	F235AM10	10	182	15	28	0.50	360	3.5	1
F235M12	F235AM12	12	192	20	32	0.64	530	5.2	2
F235M16	F235AM16	16	204	26	42	0.92	1010	9.9	3
F235M20	F235AM20	20	214	31	50	1.4	1580	15.5	4
F235M24	F235AM24	24	230	39	60	2.4	2280	22.4	5
F235M30	F235AM30	30	256	52	68	4.0	3650	35.8	6
F235M36	F235AM36	36	276	62	84	6.0	5340	52.4	7
F235M42	F235AM42	42	276	62	84	6.0	7400	72.6	8
F235M48	F235AM48	48	305	77	108	11.9	9650	94.6	9
F235M56	F235AM56	56	343	96	145	17.6	13350	130.8	10
F235M64	F235AM64	64	343	96	145	23.6	18000	176.5	11
F235M72	F235AM72	72	372	110	156	27.3	23025	225.8	12
F235M80	F235AM80	80	392	120	172	38.7	28125	275.8	13

Material: Forged or Profiled Carbon Steel
This item may be forged or profiled

239 WELDLESS EYE NUT

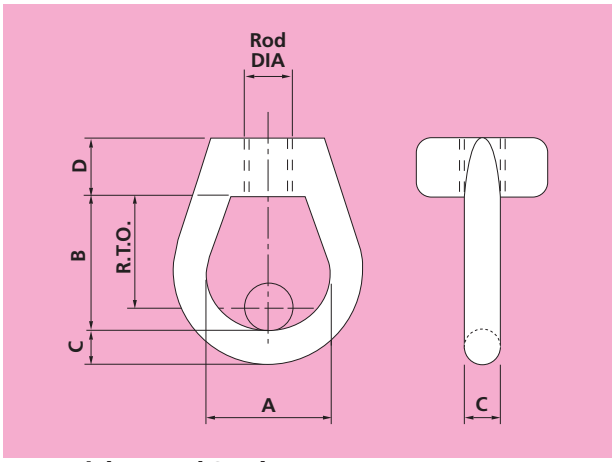

PART NUMBER	ROD DIA X	A	B	C	D	R.T.O.	WEIGHT kgf	LOAD CAPACITY kgf	LOAD CAPACITY kN	LOAD GROUP
F239M08	8	25	38	10	16	34	0.10	230	2.3	0
F239M10	10	25	38	10	16	33	0.10	360	3.5	1
F239M12	12	38	51	13	17	45	0.27	530	5.2	2
F239M16	16	38	51	13	17	43	0.25	1010	9.9	3
F239M20	20	50	79	17	28	69	0.84	1580	15.5	4
F239M24	24	50	79	17	28	67	0.81	2280	22.4	5
F239M30	30	47	95	20	47	80	2.1	3650	35.8	6
F239M36	36	47	95	20	47	77	2.0	5340	52.4	7
F239M42	42	101	159	38	57	138	7.5	7400	72.6	8
F239M48	48	101	159	38	57	135	7.3	9650	94.6	9
F239M56	56	101	159	38	57	131	7.1	13350	130.9	10
F239M64	64	101	159	38	57	127	6.8	18000	176.5	11
F239M72	72	101	222	49	89	186	18.0	23025	225.8	12
F239M80	80	101	222	49	89	182	17.4	28125	275.8	13

Material: Forged Steel

R.T.O. ASSUMES USE IN CONJUNCTION WITH A PIN HAVING THE SAME DIAMETER AS THE HANGER ROD

236 SPHERICAL WASHER

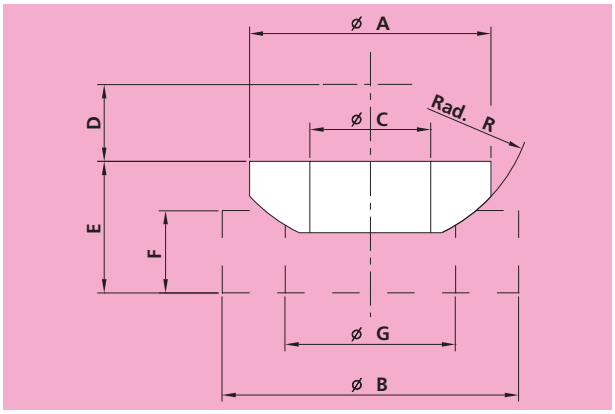

Material: Carbon Steel

280 CUP FOR SPHERICAL WASHER

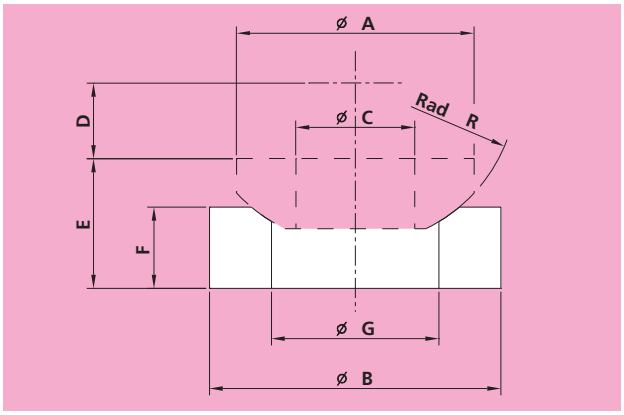

Material: Carbon Steel

PART NUMBER SPHERICAL WASHER	PART NUMBER CUP	ROD DIA	ØA	ØB	ØC	D	E	F	ØG	R	WEIGHT kgf		LOAD CAPACITY		LOAD GROUP
											SPHERICAL WASHER	CUP	kgf	kN	
F236M08	F280M08	8	19	29	10	5	13	8	13	13	0.01	0.03	230	2.3	0
F236M10	F280M10	10	23	32	12	7	14	10	15	15	0.01	0.05	360	3.5	1
F236M12	F280M12	12	26	35	14	8	16	10	18	18	0.02	0.05	530	5.2	2
F236M16	F280M16	16	36	41	18	11	19	12	23	24	0.05	0.08	1010	9.9	3
F236M20	F280M20	20	44	54	22	14	24	15	29	30	0.09	0.19	1580	15.5	4
F236M24	F280M24	24	53	63	26	17	32	20	35	36	0.16	0.33	2280	22.4	5
F236M30	F280M30	30	66	76	33	21	35	20	42	45	0.31	0.48	3650	35.8	6
F236M36	F280M36	36	79	95	39	25	44	25	51	54	0.55	0.98	5340	52.4	7
F236M42	F280M42	42	92	105	45	29	49	30	59	63	0.89	1.32	7400	72.6	8
F236M48	F280M48	48	106	130	52	34	58	35	68	72	1.28	2.59	9650	94.6	9
F236M56	F280M56	56	123	152	60	39	68	40	79	84	2.09	4.07	13350	130.9	10
F236M64	F280M64	64	141	172	68	45	78	45	91	96	3.12	5.82	18000	176.5	11
F236M72	F280M72	72	158	194	76	50	88	50	102	108	4.51	8.28	23025	225.8	12
F236M80	F280M80	80	176	215	85	56	98	60	113	120	6.11	12.02	28125	275.8	13

281 DUAL FACED ROCKING WASHER

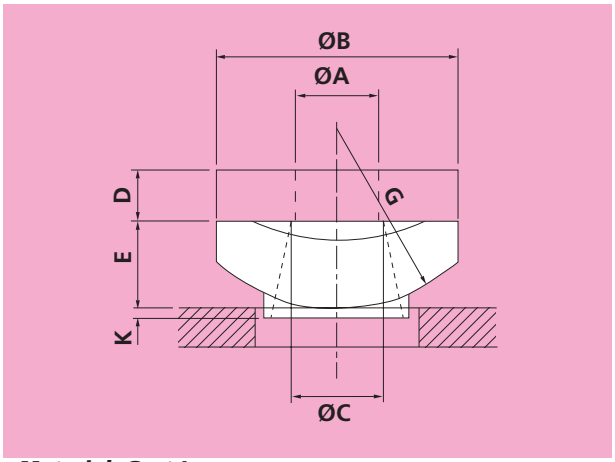

Material: Cast Iron

282 PLATE FOR DUAL FACED ROCKING WASHER

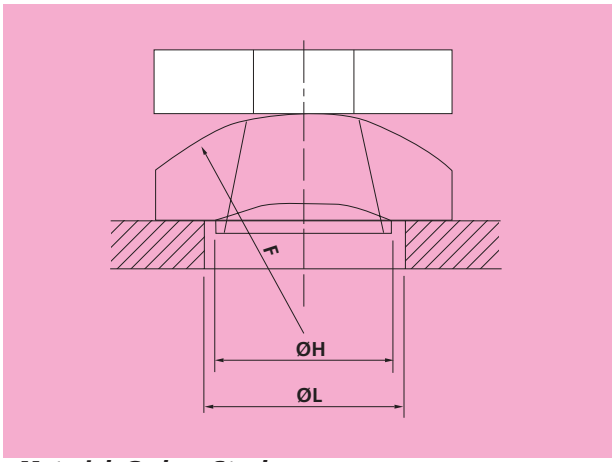

Material: Carbon Steel

PART NUMBER ROCKING WASHER	PART NUMBER PLATE	ROD DIA	A	B	C	D	E	F	G	H	K	L	WEIGHT kgf		LOAD CAPACITY		LOAD GROUP
													ROCKER WASHER	PLATE	kgf	kN	
F281M12	F282M12	M12	13	50	20	10	16	32	32	33	5	38	0.12	0.14	530	5.2	2
F281M16	F282M16	M16	17	50	20	10	16	32	32	33	5	38	0.11	0.14	1010	9.9	3
F281M20	F282M20	M20	21	65	28	15	24	48	48	44	5	49	0.28	0.35	1580	15.5	4
F281M24	F282M24	M24	26	65	28	15	24	48	48	44	5	49	0.26	0.33	2280	22.4	5
F281M30	F282M30	M30	32	98	40	20	36	72	72	59	5	66	0.95	1.1	3650	35.8	6
F281M36	F282M36	M36	38	98	40	20	36	72	72	59	5	66	0.91	1.0	5340	52.4	7
F281M42	F282M42	M42	45	114	46	25	42	84	84	67	6	74	1.4	1.7	7400	72.6	8
F281M48	F282M48	M48	52	130	52	30	48	96	96	75	7	82	2.1	2.6	9650	94.6	9
F281M56	F282M56	M56	60	151	60	35	56	112	112	89	8	93	3.3	4.1	13350	130.9	10
F281M64	F282M64	M64	68	173	69	40	64	128	128	96	10	104	5.0	6.2	18000	176.5	11

238 CLEVIS

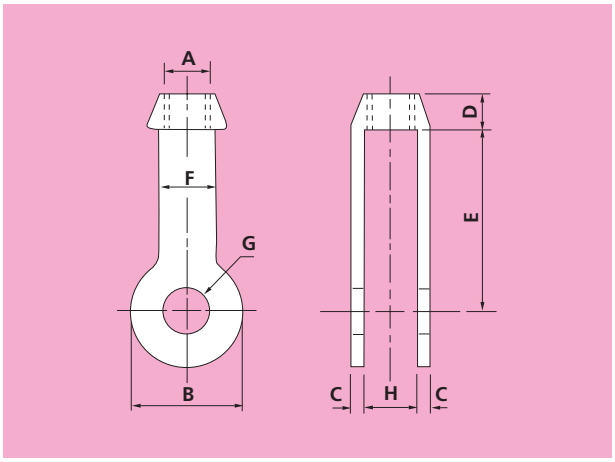

PART NUMBER	ROD DIA A	B	C	D	E	F	G	H	Wt. kgf	LOAD CAPACITY kgf	LOAD CAPACITY kN	LOAD GROUP
F238M08	8	38	13	32	95	30	10	18	1.2	230	2.3	0
F238M10	10	38	13	32	95	30	12	18	1.2	360	3.5	1
F238M12	12	38	13	32	95	30	14	18	1.1	530	5.2	2
F238M16	16	38	13	32	95	30	18	18	1.1	1010	9.9	3
F238M20	20	63	16	32	102	30	22	24	1.8	1580	15.5	4
F238M24	24	76	18	32	127	38	26	28	2.9	2280	22.4	5
F238M30	30	76	18	32	127	38	32	28	2.8	3650	35.8	6
F238M36	36	89	20	41	152	44	38	48	4.6	5340	52.4	7
F238M42	42	102	22	44	152	50	44	56	6.1	7400	72.6	8
F238M48	48	127	28	57	178	64	50	58	12.0	9650	94.6	9
F238M56	56	152	33	70	203	76	58	75	20.4	13350	130.9	10
F238M64	64	152	33	70	203	76	66	75	19.6	18000	176.5	11
F238M72	72	150	38	90	200	150	74	80	41.1	23025	225.8	12
F238M80	80	180	40	100	200	180	82	90	57.3	28125	275.8	13

Material: Forged Steel or Carbon Steel
This item may be forged or profiled

274 CLEVIS PIN

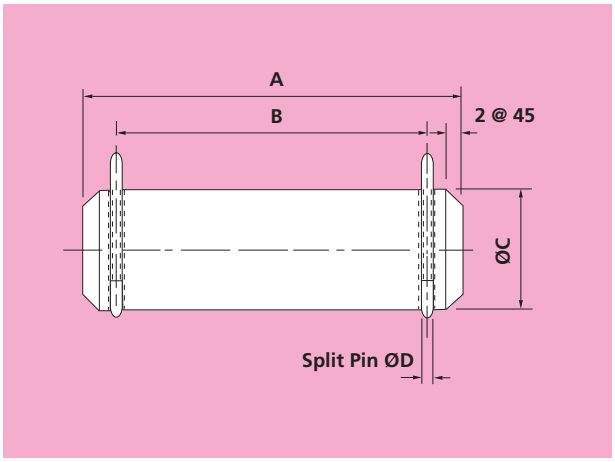

PART NUMBER	ROD DIA	A	B	PIN ØC	SPLIT PIN ØD	WEIGHT kgf	LOAD CAPACITY kgf	LOAD CAPACITY kN	LOAD GROUP
F274M08	8	70	55	8	4	0.03	230	2.3	0
F274M10	10	70	55	10	5	0.04	360	3.5	1
F274M12	12	75	60	12	5	0.07	530	5.2	2
F274M16	16	75	60	16	5	0.12	1010	9.9	3
F274M20	20	90	75	20	5	0.22	1580	15.5	4
F274M24	24	95	80	24	6	0.34	2280	22.4	5
F274M30	30	105	90	30	6	0.58	3650	35.8	6
F274M36	36	125	110	36	6	1.0	5340	52.4	7
F274M42	42	130	115	42	6	1.4	7400	72.6	8
F274M48	48	150	130	48	8	2.1	9650	94.6	9
F274M56	56	175	155	56	8	3.4	13350	130.9	10
F274M64	64	185	165	64	8	4.7	18000	176.5	11
F274M72	72	205	185	72	8	6.6	23025	225.8	12
F274M80	80	210	190	80	8	8.3	28125	275.8	13

Material: Carbon Steel

PC2 PIPE CLAMP FOR UNLAGGED PIPE TWO BOLT TYPE

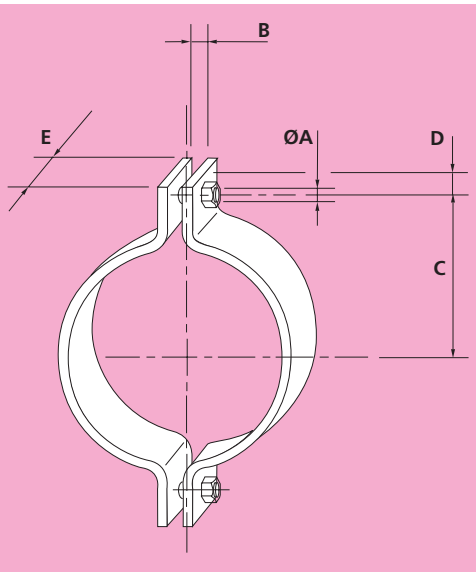

Material: Carbon Steel

Part Number	Pipe O/D		A	B	C		D	E	Weight	Load Capacity at 350C	Compatible with Rod Sizes
	mm	in	mm	mm	mm	in	mm	mm	kgf	kgf	
PC2-15-0	21.3	0.839	12	15	30	1 3/16	18	35	0.3	390	M8–M16
PC2-20-0	26.7	1.051	12	15	35	1 3/8	18	35	0.4	390	M8–M16
PC2-25-0	33.4	1.315	12	15	40	1 9/16	18	35	0.4	390	M8–M16
PC2-32-0	42.2	1.661	12	15	45	1 3/4	18	35	0.4	390	M8–M16
PC2-40-0	48.3	1.902	12	15	45	1 3/4	18	35	0.5	390	M8–M16
PC2-50-0	60.3	2.375	12	15	55	2 3/16	18	35	0.5	390	M8–M16
PC2-50-1	60.3	2.375	16	17	60	2 3/8	24	40	0.9	740	M8–M16
PC2-50-2	60.3	2.375	16	17	60	2 3/8	24	40	0.9	740	M8–M16
PC2-65-0	73.0	2.875	12	15	65	2 9/16	18	35	0.6	370	M8–M16
PC2-65-1	73.0	2.875	16	17	70	2 3/4	24	40	1.0	590	M8–M16
PC2-65-2	73.0	2.875	16	17	70	2 3/4	24	40	1.0	590	M8–M16
PC2-80-0	88.9	3.500	12	15	70	2 3/4	18	35	0.7	340	M8–M16
PC2-80-1	88.9	3.500	16	17	75	2 15/16	24	40	1.0	530	M8–M16
PC2-80-2	88.9	3.500	16	17	75	2 15/16	24	40	1.0	530	M8–M16
PC2-90-0	101.6	4.000	12	15	75	2 15/16	18	35	0.7	320	M8–M16
PC2-90-1	101.6	4.000	16	17	80	3 1/8	24	40	1.1	500	M8–M16
PC2-90-2	101.6	4.000	16	17	85	3 3/8	24	40	1.4	800	M8–M16
PC2-100-0	114.3	4.500	12	15	85	3 3/8	18	35	0.8	270	M8–M16
PC2-100-1	114.3	4.500	16	17	90	3 9/16	24	40	1.2	420	M8–M16
PC2-100-2	114.3	4.500	16	17	95	3 3/4	24	40	1.6	740	M8–M16
PC2-100-3	114.3	4.500	20	20	105	4 1/8	30	60	3.8	1320	M12–M24
PC2-125-0	141.3	5.563	12	15	95	3 3/4	18	35	0.9	260	M8–M16
PC2-125-1	141.3	5.563	16	17	105	4 1/8	24	40	1.7	680	M8–M16
PC2-125-2	141.3	5.563	16	17	105	4 1/8	24	40	1.7	680	M8–M16
PC2-125-3	141.3	5.563	20	20	120	4 3/4	30	60	4.3	1320	M12–M24
PC2-150-0	168.3	6.625	12	15	115	4 1/2	18	40	1.4	340	M8–M16
PC2-150-1	168.3	6.625	16	17	120	4 3/4	24	40	2.0	590	M8–M16
PC2-150-2	168.3	6.625	16	17	120	4 3/4	24	40	2.0	590	M8–M16
PC2-150-3	168.3	6.625	20	20	135	5 5/16	30	60	4.8	1320	M12–M24
PC2-150-4	168.3	6.625	24	25	135	5 5/16	36	60	5.1	1800	M12–M36

Bold part numbers indicate a stocked item.

PC2 PIPE CLAMP FOR UNLAGGED PIPE TWO BOLT TYPE

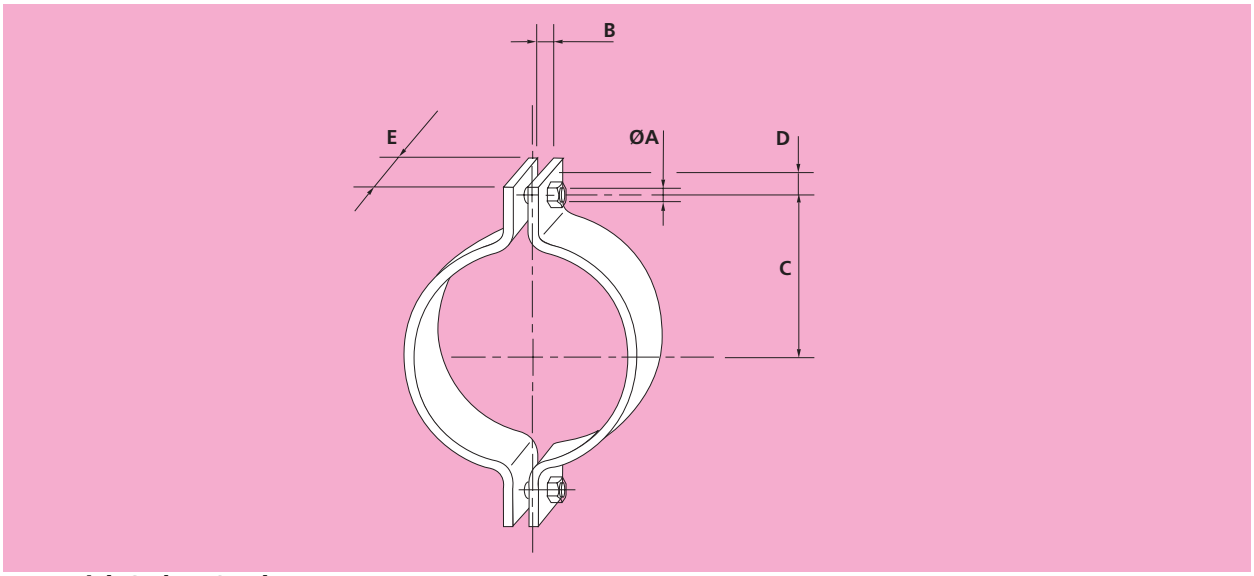

Material: Carbon Steel

Part Number	Pipe O/D		A	B	C		D	E	Weight	Load Capacity at 350C	Compatible with Rod Sizes
	mm	in	mm	mm	mm	in	mm	mm	kgf	kgf	
PC2-175-0	193.7	7.625	12	15	125	$4^{15}/16$	18	40	1.5	330	M8–M16
PC2-175-1	193.7	7.625	16	17	135	$5^{5}/16$	24	40	2.2	510	M8–M16
PC2-175-2	193.7	7.625	16	17	140	$5^{1}/2$	24	45	3.1	800	M8–M16
PC2-175-3	193.7	7.625	20	20	145	$5^{11}/16$	30	60	5.2	1320	M12–M24
PC2-175-4	193.7	7.625	24	25	150	$5^{7}/8$	36	60	5.6	1590	M12–M36
PC2-175-5	193.7	7.625	30	29	170	$6^{11}/16$	45	90	15.1	3050	M12–M36
PC2-200-0	219.1	8.625	12	15	140	$5^{1}/2$	18	40	1.7	290	M8–M16
PC2-200-1	219.1	8.625	16	17	150	$5^{7}/8$	24	40	2.4	460	M8–M16
PC2-200-2	219.1	8.625	16	17	155	$6^{1}/8$	24	45	3.4	790	M8–M16
PC2-200-3	219.1	8.625	20	20	160	$6^{5}/16$	30	60	5.7	1320	M12–M24
PC2-200-4	219.1	8.625	24	25	180	$7^{1}/16$	36	65	11.1	1830	M12–M36
PC2-200-5	219.1	8.625	30	29	185	$7^{5}/16$	45	90	16.3	3050	M12–M36
PC2-200-6	219.1	8.625	36	41	185	$7^{5}/16$	54	90	17.5	3810	M20–M64
PC2-225-0	244.5	9.625	12	15	150	$5^{7}/8$	18	40	1.8	290	M8–M16
PC2-225-1	244.5	9.625	16	17	160	$6^{5}/16$	24	40	2.6	440	M8–M16
PC2-225-2	244.5	9.625	16	17	165	$6^{1}/2$	24	45	3.6	760	M8–M16
PC2-225-3	244.5	9.625	20	20	175	$6^{7}/8$	30	60	6.2	1320	M12–M24
PC2-225-4	244.5	9.625	24	25	190	$7^{1}/2$	36	65	11.7	1830	M12–M36
PC2-225-5	244.5	9.625	30	29	195	$7^{11}/16$	45	90	17.2	3050	M12–M36
PC2-225-6	244.5	9.625	36	41	200	$7^{7}/8$	54	90	18.7	3810	M20–M64
PC2-250-0	273.0	10.75	12	15	170	$6^{11}/16$	18	40	2.0	240	M8–M16
PC2-250-1	273.0	10.75	16	17	175	$6^{7}/8$	24	40	2.8	410	M8–M16
PC2-250-2	273.0	10.75	16	17	180	$7^{1}/16$	24	45	4.0	710	M8–M16
PC2-250-3	273.0	10.75	20	20	190	$7^{1}/2$	30	60	6.7	1240	M12–M24
PC2-250-4	273.0	10.75	24	25	205	$8^{1}/16$	36	65	12.7	1830	M12–M36
PC2-250-5	273.0	10.75	30	29	215	$8^{7}/16$	45	90	18.8	3050	M12–M36
PC2-250-6	273.0	10.75	36	41	215	$8^{7}/16$	54	90	20.0	3810	M20–M64
PC2-250-7	273.0	10.75	42	45	220	$8^{11}/16$	63	110	26.0	5470	M30–M64

PC2 PIPE CLAMP FOR UNLAGGED PIPE TWO BOLT TYPE

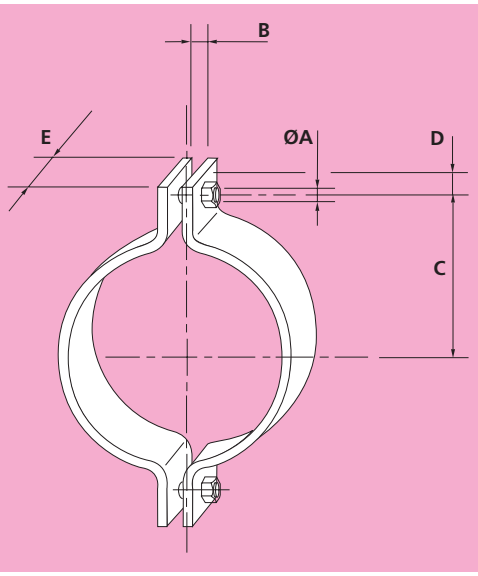

Material: Carbon Steel

Part Number	Pipe O/D		A	B	C		D	E	Weight	Load Capacity at 350C	Compatible with Rod Sizes
	mm	in	mm	mm	mm	in	mm	mm	kgf	kgf	
PC2-300-1	323.9	12.75	16	17	200	7 7/8	24	40	3.2	380	M8–M16
PC2-300-2	323.9	12.75	16	17	205	8 1/16	24	45	4.5	650	M8–M16
PC2-300-3	323.9	12.75	20	20	215	8 7/16	30	60	7.6	1130	M12–M24
PC2-300-4	323.9	12.75	24	25	235	9 1/4	36	65	14.4	1830	M12–M36
PC2-300-5	323.9	12.75	30	29	240	9 7/16	45	90	21.0	3050	M12–M36
PC2-300-6	323.9	12.75	36	41	245	9 5/8	54	90	22.5	3810	M20–M64
PC2-300-7	323.9	12.75	42	45	260	10 1/4	63	110	36.1	5470	M30–M64
PC2-300-8	323.9	12.75	48	52	265	10 7/16	72	130	44.9	8760	M42–M80
PC2-350-1	355.6	14.00	16	17	225	8 7/8	24	45	4.9	570	M8–M16
PC2-350-2	355.6	14.00	16	17	225	8 7/8	24	45	4.9	570	M8–M16
PC2-350-3	355.6	14.00	20	20	230	9 1/16	30	60	8.1	1080	M12–M24
PC2-350-4	355.6	14.00	24	25	250	9 13/16	36	65	15.4	1830	M12–M36
PC2-350-5	355.6	14.00	30	29	255	10 1/16	45	90	22.3	3050	M12–M36
PC2-350-6	355.6	14.00	36	41	260	10 1/4	54	90	23.8	3810	M20–M64
PC2-350-7	355.6	14.00	42	45	275	10 13/16	63	110	38.1	5470	M30–M64
PC2-350-8	355.6	14.00	48	52	280	11	72	130	47.2	8250	M42–M80
PC2-350-9	355.6	14.00	56	58	295	11 5/8	84	150	69.5	10000	M42–M80
PC2-400-1	406.4	16.00	16	17	250	9 13/16	24	45	5.5	530	M8–M16
PC2-400-2	406.4	16.00	16	17	255	10 1/16	24	60	8.7	800	M8–M16
PC2-400-3	406.4	16.00	20	20	265	10 7/16	30	55	10.5	1320	M12–M24
PC2-400-4	406.4	16.00	24	25	275	10 13/16	36	65	17.0	1830	M12–M36
PC2-400-5	406.4	16.00	30	29	285	11 1/4	45	90	24.8	3050	M12–M36
PC2-400-6	406.4	16.00	36	41	285	11 1/4	54	110	31.3	3810	M20–M64
PC2-400-7	406.4	16.00	42	45	300	11 13/16	63	110	41.4	5470	M30–M64
PC2-400-8	406.4	16.00	48	52	305	12	72	130	51.1	7530	M42–M80
PC2-400-9	406.4	16.00	56	58	325	12 13/16	84	150	75.5	10000	M42–M80
PC2-400-10	406.4	16.00	64	65	345	13 9/16	96	180	125.9	20510	M42–M80

Bold part numbers indicate a stocked item.

PC2 PIPE CLAMP FOR UNLAGGED PIPE TWO BOLT TYPE

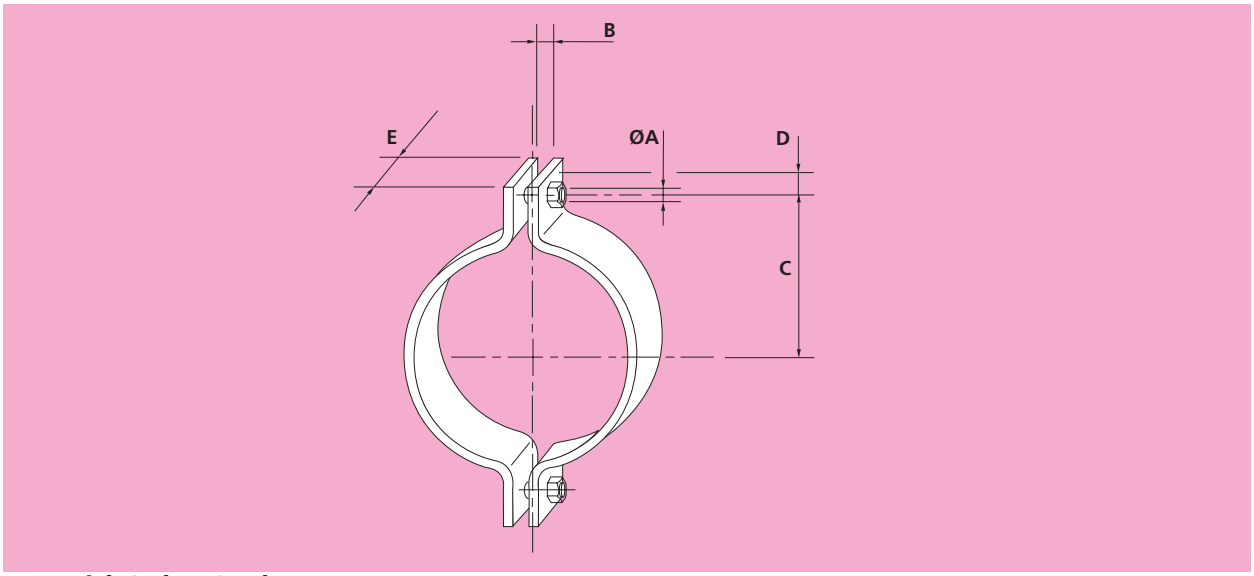

Material: Carbon Steel

Part Number	Pipe O/D		A	B	C		D	E	Weight	Load Capacity at 350C	Compatible with Rod Sizes
	mm	in	mm	mm	mm	in	mm	mm	kgf	kgf	
PC2-450-2	457.2	18.00	16	17	280	11	24	60	9.6	800	M8–M16
PC2-450-3	457.2	18.00	20	20	290	11 7/16	30	55	11.5	1260	M12–M24
PC2-450-4	457.2	18.00	24	25	305	12	36	65	18.8	1830	M12–M36
PC2-450-5	457.2	18.00	30	29	310	12 3/16	45	90	27.0	3050	M12–M36
PC2-450-6	457.2	18.00	36	41	315	12 3/8	54	110	34.3	3810	M20–M64
PC2-450-7	457.2	18.00	42	45	330	13	63	110	45.2	5470	M30–M64
PC2-450-8	457.2	18.00	48	52	335	13 3/16	72	150	63.4	7780	M42–M80
PC2-450-9	457.2	18.00	56	58	350	13 3/4	84	150	81.0	10000	M42–M80
PC2-450-10	457.2	18.00	64	65	375	14 3/4	96	180	135.7	20510	M42–M80
PC2-450-11	457.2	18.00	72	69	385	15 3/16	108	180	144.6	21500	M42–M80
PC2-500-2	508	20.00	16	17	305	12	24	60	10.5	800	M8–M16
PC2-500-3	508	20.00	20	20	315	12 3/8	30	55	12.5	1200	M12–M24
PC2-500-4	508	20.00	24	25	330	13	36	65	20.4	1830	M12–M36
PC2-500-5	508	20.00	30	29	335	13 3/16	45	90	29.2	3050	M12–M36
PC2-500-6	508	20.00	36	41	340	13 3/8	54	110	37.0	3680	M20–M64
PC2-500-7	508	20.00	42	45	355	14	63	110	48.6	5470	M30–M64
PC2-500-8	508	20.00	48	52	370	14 9/16	72	150	81.7	10420	M42–M80
PC2-500-9	508	20.00	56	58	380	14 15/16	84	150	87.2	9870	M42–M80
PC2-500-10	508	20.00	64	65	405	15 15/16	96	180	145.4	20380	M42–M80
PC2-500-11	508	20.00	72	69	410	16 1/8	108	180	153.2	20020	M42–M80
PC2-500-12	508	20.00	80	77	420	16 9/16	120	220	194.9	23700	M72–M80
PC2-550-3	558.8	22.00	20	20	340	13 3/8	30	55	13.5	1130	M12–M24
PC2-550-4	558.8	22.00	24	25	355	14	36	65	22.0	1830	M12–M36
PC2-550-5	558.8	22.00	30	29	360	14 3/16	45	90	31.4	2920	M12–M36
PC2-550-6	558.8	22.00	36	41	375	14 3/4	54	110	49.7	3810	M20–M64
PC2-550-7	558.8	22.00	42	45	385	15 3/16	63	130	61.3	5470	M30–M64
PC2-550-8	558.8	22.00	48	52	400	15 3/4	72	150	87.9	9480	M42–M80
PC2-550-9	558.8	22.00	56	58	425	16 3/4	84	150	123.9	10000	M42–M80
PC2-550-10	558.8	22.00	64	65	430	16 15/16	96	180	154.0	19130	M42–M80
PC2-550-11	558.8	22.00	72	69	440	17 5/16	108	180	162.9	18340	M42–M80
PC2-550-12	558.8	22.00	80	77	465	18 5/16	120	200	235.6	31070	M72–M80
PC2-550-13	558.8	22.00	80	85	460	18 1/8	120	200	233.9	30830	M72–M80

PC2 PIPE CLAMP FOR UNLAGGED PIPE TWO BOLT TYPE

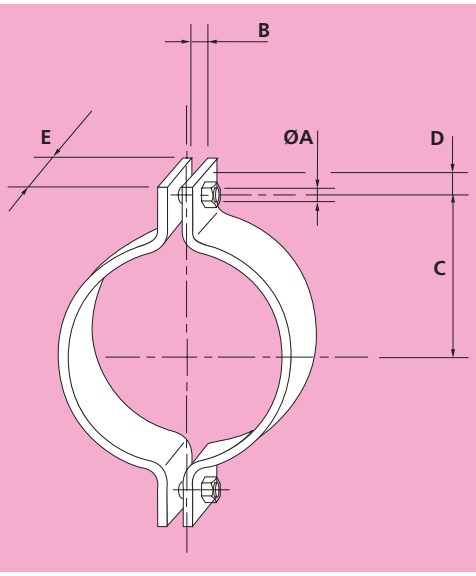

Material: Carbon Steel

Part Number	Pipe O/D		A	B	C		D	E	Weight	Load Capacity at 350C	Compatible with Rod Sizes
	mm	in	mm	mm	mm	in	mm	mm	kgf	kgf	
PC2-600-3	609.6	24.00	20	20	370	14 9/16	30	55	14.7	1010	M12–M24
PC2-600-4	609.6	24.00	24	25	385	15 3/16	36	65	23.8	1830	M12–M36
PC2-600-5	609.6	24.00	30	29	390	15 3/8	45	90	34.0	2660	M12–M36
PC2-600-6	609.6	24.00	36	41	405	15 15/16	54	110	53.5	3810	M20–M64
PC2-600-7	609.6	24.00	42	45	410	16 1/8	63	130	65.3	5470	M30–M64
PC2-600-8	609.6	24.00	48	52	425	16 3/4	72	150	93.4	9000	M42–M80
PC2-600-9	609.6	24.00	56	58	450	17 11/16	84	150	131.2	10000	M42–M80
PC2-600-10	609.6	24.00	64	65	460	18 1/8	96	180	163.8	17670	M42–M80
PC2-600-11	609.6	24.00	72	69	465	18 5/16	108	200	189.0	19260	M42–M80
PC2-600-12	609.6	24.00	80	77	490	19 5/16	120	200	247.6	29340	M72–M80
PC2-600-13	609.6	24.00	80	85	490	19 5/16	120	200	247.4	29610	M72–M80
PC2-650-3	660.4	26.00	20	20	405	15 15/16	30	65	24.8	1320	M12–M24
PC2-650-4	660.4	26.00	24	25	410	16 1/8	36	65	25.4	1830	M12–M36
PC2-650-5	660.4	26.00	30	29	415	16 5/16	45	90	36.2	2530	M12–M36
PC2-650-6	660.4	26.00	36	41	430	16 15/16	54	110	56.9	3810	M20–M64
PC2-650-7	660.4	26.00	42	45	435	17 1/8	63	150	79.5	5470	M30–M64
PC2-650-8	660.4	26.00	48	52	450	17 11/16	72	150	98.8	8560	M42–M80
PC2-650-9	660.4	26.00	56	58	480	18 7/8	84	150	139.4	10000	M42–M80
PC2-650-10	660.4	26.00	64	65	485	19 1/8	96	180	172.6	16770	M42–M80
PC2-650-11	660.4	26.00	72	69	490	19 5/16	108	200	198.7	18270	M42–M80
PC2-650-12	660.4	26.00	80	77	520	20 1/2	120	200	261.1	27260	M72–M80
PC2-650-13	660.4	26.00	80	85	515	20 1/4	120	220	283.0	30830	M72–M80
PC2-700-3	711.2	28.00	20	20	430	16 15/16	30	65	26.4	1320	M12–M24
PC2-700-4	711.2	28.00	24	25	435	17 1/8	36	65	27.0	1830	M12–M36
PC2-700-5	711.2	28.00	30	29	440	17 5/16	45	90	38.4	2420	M12–M36
PC2-700-6	711.2	28.00	36	41	455	17 15/16	54	110	60.3	3810	M20–M64
PC2-700-7	711.2	28.00	42	45	460	18 1/8	63	150	84.0	5470	M30–M64
PC2-700-8	711.2	28.00	48	52	475	18 11/16	72	150	104.3	8170	M42–M80
PC2-700-9	711.2	28.00	56	58	505	19 7/8	84	150	146.5	10000	M42–M80
PC2-700-10	711.2	28.00	64	65	510	20 1/16	96	180	181.2	15990	M42–M80
PC2-700-11	711.2	28.00	72	69	520	20 1/2	108	220	229.0	18700	M42–M80
PC2-700-12	711.2	28.00	80	77	545	21 7/16	120	200	273.0	25950	M72–M80
PC2-700-13	711.2	28.00	80	85	545	21 7/16	120	220	297.9	28790	M72–M80

PC2 PIPE CLAMP FOR UNLAGGED PIPE TWO BOLT TYPE

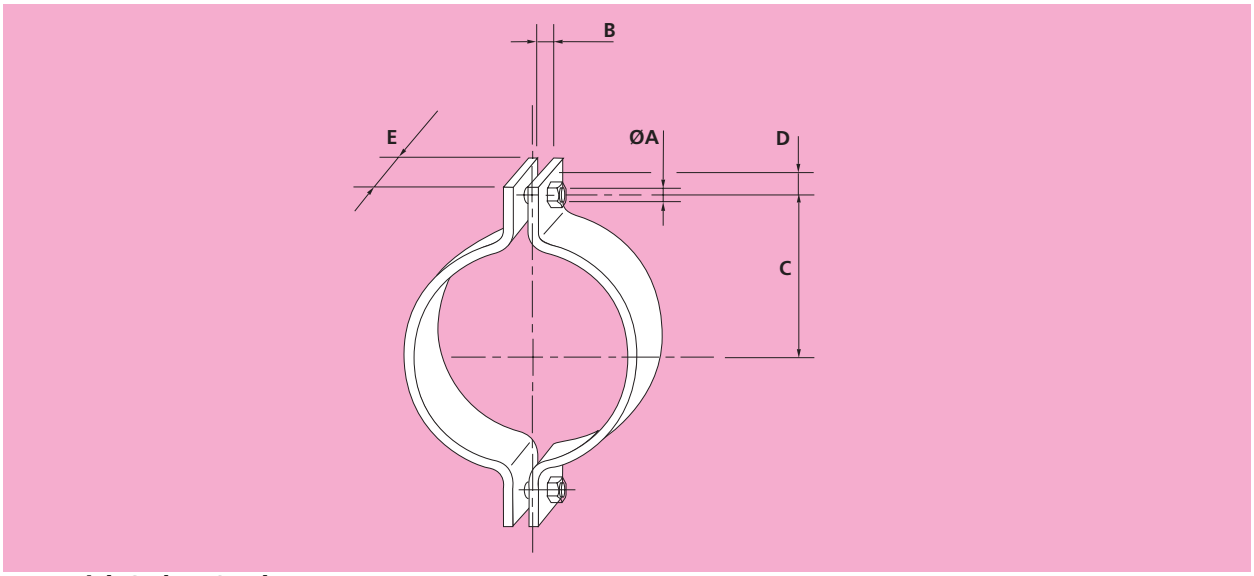

Material: Carbon Steel

Part Number	Pipe O/D		A	B	C		D	E	Weight	Load Capacity at 350C	Compatible with Rod Sizes
	mm	in	mm	mm	mm	in	mm	mm	kgf	kgf	
PC2-750-4	762.0	30.00	24	25	460	18 1/8	36	65	28.6	1780	M12–M36
PC2-750-5	762.0	30.00	30	29	465	18 5/16	45	90	40.6	2350	M12–M36
PC2-750-6	762.0	30.00	36	41	480	18 7/8	54	110	63.7	3810	M20–M64
PC2-750-7	762.0	30.00	42	45	485	19 1/8	63	150	88.7	5470	M30–M64
PC2-750-8	762.0	30.00	48	52	505	19 7/8	72	150	110.6	7610	M42–M80
PC2-750-9	762.0	30.00	56	58	530	20 7/8	84	150	153.9	10000	M42–M80
PC2-750-10	762.0	30.00	64	65	540	21 1/4	96	180	191.1	14970	M42–M80
PC2-750-11	762.0	30.00	72	69	565	22 1/4	108	200	275.1	25190	M42–M80
PC2-750-12	762.0	30.00	80	77	570	22 7/16	120	200	285.1	24860	M72–M80
PC2-750-13	762.0	30.00	80	85	570	22 7/16	120	240	337.6	30070	M72–M80
PC2-800-4	812.8	32.00	24	25	485	19 1/8	36	65	30.2	1730	M12–M36
PC2-800-5	812.8	32.00	30	29	490	19 5/16	45	110	52.1	2780	M12–M36
PC2-800-6	812.8	32.00	36	41	510	20 1/16	54	110	67.5	3810	M20–M64
PC2-800-7	812.8	32.00	42	45	525	20 11/16	63	150	113.0	5470	M30–M64
PC2-800-8	812.8	32.00	48	52	550	21 5/8	72	150	155.9	10910	M42–M80
PC2-800-9	812.8	32.00	56	58	560	22 1/16	84	150	162.3	10000	M42–M80
PC2-800-10	812.8	32.00	64	65	565	22 1/4	96	180	199.9	14410	M42–M80
PC2-800-11	812.8	32.00	72	69	590	23 1/4	108	200	287.4	24240	M42–M80
PC2-800-12	812.8	32.00	80	77	600	23 5/8	120	200	299.0	23420	M72–M80
PC2-800-13	812.8	32.00	80	85	600	23 5/8	120	240	354.2	28320	M72–M80
PC2-850-4	863.6	34.00	24	25	510	20 1/16	36	65	31.8	1670	M12–M36
PC2-850-5	863.6	34.00	30	29	515	21 1/4	45	110	54.8	2690	M12–M36
PC2-850-6	863.6	34.00	36	41	535	21 1/16	54	110	70.9	3810	M20–M64
PC2-850-7	863.6	34.00	42	45	550	21 5/8	63	150	118.5	5470	M30–M64
PC2-850-8	863.6	34.00	48	52	575	22 5/8	72	150	163.3	10910	M42–M80
PC2-850-9	863.6	34.00	56	58	585	23 1/16	84	150	169.5	10000	M42–M80
PC2-850-10	863.6	34.00	64	65	590	23 1/4	96	180	208.7	13870	M42–M80
PC2-850-11	863.6	34.00	72	69	620	24 7/16	108	200	300.9	22830	M42–M80
PC2-850-12	863.6	34.00	80	77	625	24 5/8	120	220	340.0	24770	M72–M80
PC2-850-13	863.6	34.00	80	85	625	24 5/8	120	260	397.4	29490	M72–M80

PC2 PIPE CLAMP FOR UNLAGGED PIPE TWO BOLT TYPE

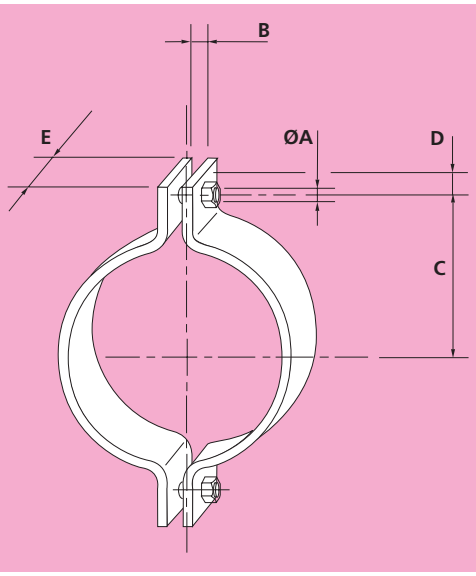

Material: Carbon Steel

Part Number	Pipe O/D		A	B	C		D	E	Weight	Load Capacity at 350C	Compatible with Rod Sizes
	mm	in	mm	mm	mm	in	mm	mm	kgf	kgf	
PC2-900-4	914.4	36.00	24	25	535	21 1/16	36	65	33.5	1630	M12–M36
PC2-900-5	914.4	36.00	30	29	545	21 7/16	45	110	57.9	2490	M12–M36
PC2-900-6	914.4	36.00	36	41	560	22 1/16	54	110	74.3	3760	M20–M64
PC2-900-7	914.4	36.00	42	45	575	22 5/8	63	150	124.1	5470	M30–M64
PC2-900-8	914.4	36.00	48	52	605	23 13/16	72	150	171.6	10910	M42–M80
PC2-900-9	914.4	36.00	56	58	610	24	84	150	176.9	10000	M42–M80
PC2-900-10	914.4	36.00	64	65	620	24 7/16	96	200	241.9	14560	M42–M80
PC2-900-11	914.4	36.00	72	69	645	25 3/8	108	200	313.2	22080	M42–M80
PC2-900-12	914.4	36.00	80	77	655	25 13/16	120	220	355.2	23470	M72–M80
PC2-900-13	914.4	36.00	80	85	650	25 9/16	120	260	413.4	28500	M72–M80
PC2-950-4	965.2	38.00	24	25	565	22 1/4	36	90	48.6	1830	M12–M36
PC2-950-5	965.2	38.00	30	29	570	22 7/16	45	110	60.7	2440	M12–M36
PC2-950-6	965.2	38.00	36	41	585	23 1/16	54	110	77.7	3660	M20–M64
PC2-950-7	965.2	38.00	42	45	605	23 13/16	63	150	130.4	5470	M30–M64
PC2-950-8	965.2	38.00	48	52	630	24 13/16	72	150	179.0	10910	M42–M80
PC2-950-9	965.2	38.00	56	58	635	25	84	150	184.3	10000	M42–M80
PC2-950-10	965.2	38.00	64	65	645	25 3/8	96	200	251.7	14130	M42–M80
PC2-950-11	965.2	38.00	72	69	675	26 9/16	108	200	327.0	20950	M42–M80
PC2-950-12	965.2	38.00	80	77	680	26 3/4	120	240	400.3	24800	M72–M80
PC2-950-13	965.2	38.00	80	85	680	26 3/4	120	280	462.9	29130	M72–M80
PC2-1000-4	1016.0	40.00	24	25	590	23 1/4	36	90	50.8	1810	M12–M36
PC2-1000-5	1016.0	40.00	30	29	595	23 7/16	45	110	63.4	2370	M12–M36
PC2-1000-6	1016.0	40.00	36	41	610	24	54	130	95.5	3810	M20–M64
PC2-1000-7	1016.0	40.00	42	45	630	24 13/16	63	150	135.9	5470	M30–M64
PC2-1000-8	1016.0	40.00	48	52	655	25 13/16	72	150	186.3	10910	M42–M80
PC2-1000-9	1016.0	40.00	56	58	665	26 3/16	84	150	192.6	10000	M42–M80
PC2-1000-10	1016.0	40.00	64	65	670	26 3/8	96	200	261.5	13690	M42–M80
PC2-1000-11	1016.0	40.00	72	69	700	27 9/16	108	200	339.1	20290	M42–M80
PC2-1000-12	1016.0	40.00	80	77	705	27 3/4	120	240	414.8	24010	M72–M80
PC2-1000-13	1016.0	40.00	80	85	705	27 3/4	120	280	479.9	28200	M72–M80

PC3 PIPE CLAMP THREE BOLT TYPE

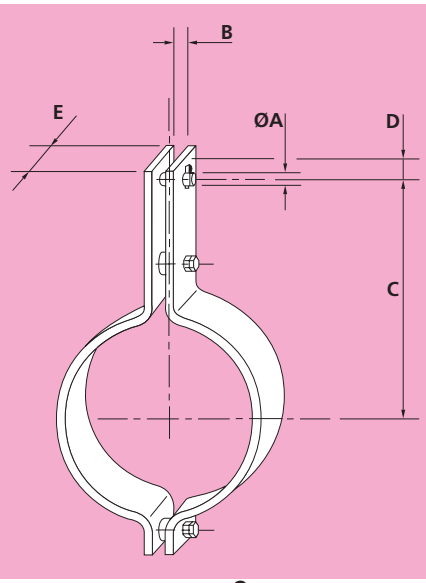

Material: Carbon Steel to 400°C Alloy Steel above 400°C

Part Number	Pipe O/D		A	B	C		D	E	Weight	Load Capacity (kgf) at Temperatutre C							Compatible with Rod Sizes
	mm	in	mm	mm	mm	in	mm	mm	kgf	350	400	490	530	560	580	600	
PC3-15-0-400	21.3	0.839	12	15	100	3 15/16	18	35	0.6	390	390						M8–M16
PC3-15-0-490	21.3	0.839	12	15	110	4 5/16	18	40	0.8	390	390	390	390	390	390	340	M8–M16
PC3-15-0-530	21.3	0.839	12	15	110	4 5/16	18	40	0.8	390	390	390	390	390	390	340	M8–M16
PC3-15-0-560	21.3	0.839	12	15	110	4 5/16	18	40	0.8	390	390	390	390	390	390	390	M8–M16
PC3-15-0-600	21.3	0.839	12	15	110	4 5/16	18	40	0.8	390	390	390	390	390	390	390	M8–M16
PC3-20-0-400	26.7	1.051	12	15	100	3 15/16	18	35	0.6	390	390						M8–M16
PC3-20-0-490	26.7	1.051	12	15	110	4 5/16	18	40	0.8	390	390	390	390	390	390	340	M8–M16
PC3-20-0-530	26.7	1.051	12	15	110	4 5/16	18	40	0.8	390	390	390	390	390	390	340	M8–M16
PC3-20-0-560	26.7	1.051	12	15	110	4 5/16	18	40	0.8	390	390	390	390	390	390	390	M8–M16
PC3-20-0-600	26.7	1.051	12	15	110	4 5/16	18	40	0.8	390	390	390	390	390	390	390	M8–M16
PC3-25-0-400	33.4	1.315	12	15	100	3 15/16	18	35	0.6	390	390						M8–M16
PC3-25-0-490	33.4	1.315	12	15	120	4 3/4	18	40	0.9	390	390	390	390	390	380	300	M8–M16
PC3-25-0-530	33.4	1.315	12	15	120	4 3/4	18	40	0.9	390	390	390	390	390	380	300	M8–M16
PC3-25-0-560	33.4	1.315	12	15	120	4 3/4	18	40	0.9	390	390	390	390	390	390	390	M8–M16
PC3-25-0-600	33.4	1.315	12	15	120	4 3/4	18	40	0.9	390	390	390	390	390	390	390	M8–M16
PC3-32-0-400	42.2	1.661	12	15	110	4 5/16	18	35	0.6	390	390						M8–M16
PC3-32-0-490	42.2	1.661	12	15	120	4 3/4	18	40	0.9	390	390	390	390	390	300	240	M8–M16
PC3-32-0-530	42.2	1.661	12	15	120	4 3/4	18	40	0.9	390	390	390	390	390	300	240	M8–M16
PC3-32-0-560	42.2	1.661	12	15	120	4 3/4	18	40	0.9	390	390	390	390	390	390	320	M8–M16
PC3-32-0-600	42.2	1.661	12	15	120	4 3/4	18	40	0.9	390	390	390	390	390	390	320	M8–M16
PC3-40-0-400	48.3	1.902	12	15	110	4 5/16	18	35	0.7	390	390						M8–M16
PC3-40-0-490	48.3	1.902	12	15	120	4 3/4	18	40	0.9	390	390	390	390	350	250	210	M8–M16
PC3-40-0-530	48.3	1.902	12	15	120	4 3/4	18	40	0.9	390	390	390	390	350	250	210	M8–M16
PC3-40-0-560	48.3	1.902	12	15	120	4 3/4	18	40	0.9	390	390	390	390	390	360	270	M8–M16
PC3-40-0-600	48.3	1.902	12	15	120	4 3/4	18	40	0.9	390	390	390	390	390	360	270	M8–M16
PC3-50-0-400	60.3	2.375	12	15	120	4 3/4	18	35	0.7	390	390						M8–M16
PC3-50-1-400	60.3	2.375	16	17	120	4 3/4	24	40	1.0	800	740						M8–M16
PC3-50-2-400	60.3	2.375	16	17	120	4 3/4	24	40	1.0	800	740						M8–M16
PC3-50-0-490	60.3	2.375	12	15	130	5 1/8	18	40	1.0	390	390	390	390	300	220	170	M8–M16
PC3-50-1-490	60.3	2.375	16	17	130	5 1/8	24	40	1.0	800	800	730	510	310	220	180	M8–M16
PC3-50-2-490	60.3	2.375	16	17	130	5 1/8	24	40	1.0	800	800	730	510	310	220	180	M8–M16
PC3-50-0-530	60.3	2.375	12	15	130	5 1/8	18	40	1.0	390	390	390	390	300	220	170	M8–M16
PC3-50-1-530	60.3	2.375	16	17	130	5 1/8	24	40	1.0	800	800	730	510	310	220	180	M8–M16
PC3-50-2-530	60.3	2.375	16	17	130	5 1/8	24	50	2.1	800	800	800	800	800	800	640	M8–M16
PC3-50-0-560	60.3	2.375	12	15	130	5 1/8	18	40	1.0	390	390	390	390	380	300	230	M8–M16
PC3-50-1-560	60.3	2.375	16	17	130	5 1/8	24	40	1.0	800	800	740	550	390	310	240	M8–M16
PC3-50-2-560	60.3	2.375	16	17	130	5 1/8	24	50	2.1	800	800	800	800	800	800	800	M8–M16
PC3-50-0-600	60.3	2.375	12	15	130	5 1/8	18	40	1.0	390	390	390	390	380	300	230	M8–M16
PC3-50-1-600	60.3	2.375	16	17	130	5 1/8	24	50	2.1	800	800	800	800	800	800	800	M8–M16
PC3-50-2-600	60.3	2.375	16	17	130	5 1/8	24	50	2.1	800	800	800	800	800	800	800	M8–M16

PC3 PIPE CLAMP THREE BOLT TYPE

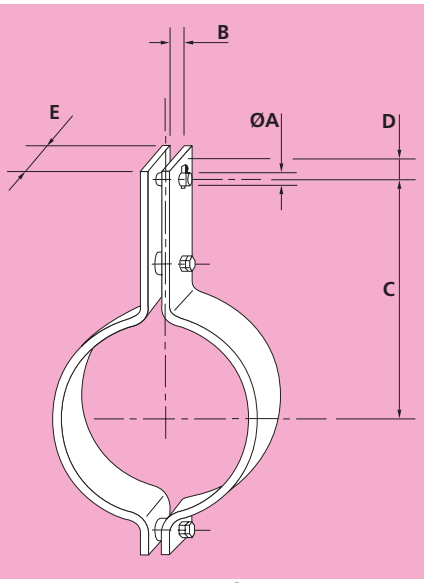

Material: Carbon Steel to 400°C Alloy Steel above 400°C

Part Number	Pipe O/D		A	B	C		D	E	Weight	Load Capacity (kgf) at Temperature C							Compatible with Rod Sizes
	mm	in	mm	mm	mm	in	mm	mm	kgf	350	400	490	530	560	580	600	
PC3-65-0-400	73.0	2.875	12	15	130	5 1/8	18	35	0.8	370	340						M8–M16
PC3-65-1-400	73.0	2.875	16	17	130	5 1/8	24	40	1.1	650	590						M8–M16
PC3-65-2-400	73.0	2.875	16	17	130	5 1/8	24	40	1.1	650	590						M8–M16
PC3-65-0-490	73.0	2.875	12	15	140	5 1/2	18	40	1.1	390	390	390	390	270	190	150	M8–M16
PC3-65-1-490	73.0	2.875	16	17	140	5 1/2	24	40	1.2	670	670	590	440	270	200	150	M8–M16
PC3-65-2-490	73.0	2.875	16	17	140	5 1/2	24	40	1.2	670	670	590	440	270	200	150	M8–M16
PC3-65-0-530	73.0	2.875	12	15	140	5 1/2	18	40	1.1	390	390	390	390	270	190	150	M8–M16
PC3-65-1-530	73.0	2.875	16	17	140	5 1/2	24	40	1.2	670	670	590	440	270	200	150	M8–M16
PC3-65-2-530	73.0	2.875	16	17	140	5 1/2	24	50	2.3	800	800	800	800	800	740	550	M8–M16
PC3-65-0-560	73.0	2.875	12	15	150	5 7/8	18	40	1.1	390	390	390	390	330	260	200	M8–M16
PC3-65-1-560	73.0	2.875	16	17	150	5 7/8	24	50	2.4	800	800	800	800	800	800	760	M8–M16
PC3-65-2-560	73.0	2.875	16	17	150	5 7/8	24	50	2.4	800	800	800	800	800	800	760	M8–M16
PC3-65-0-600	73.0	2.875	12	15	150	5 7/8	18	50	2.3	390	390	390	390	390	390	390	M8–M16
PC3-65-1-600	73.0	2.875	16	17	150	5 7/8	24	50	2.4	800	800	800	800	800	800	760	M8–M16
PC3-65-2-600	73.0	2.875	16	17	150	5 7/8	24	50	2.4	800	800	800	800	800	800	760	M8–M16
PC3-80-0-400	88.9	3.5	12	15	150	5 7/8	18	35	0.9	340	310						M8–M16
PC3-80-1-400	88.9	3.5	16	17	150	5 7/8	24	40	1.2	600	540						M8–M16
PC3-80-2-400	88.9	3.5	16	17	150	5 7/8	24	40	1.2	600	540						M8–M16
PC3-80-0-490	88.9	3.5	12	15	150	5 7/8	18	40	1.2	390	390	390	380	230	160	130	M8–M16
PC3-80-1-490	88.9	3.5	16	17	150	5 7/8	24	40	1.2	620	620	540	380	230	170	130	M8–M16
PC3-80-2-490	88.9	3.5	16	17	150	5 7/8	24	40	1.2	620	620	540	380	230	170	130	M8–M16
PC3-80-0-530	88.9	3.5	12	15	150	5 7/8	18	40	1.2	390	390	390	380	230	160	130	M8–M16
PC3-80-1-530	88.9	3.5	16	17	150	5 7/8	24	40	1.2	620	620	540	380	230	170	130	M8–M16
PC3-80-2-530	88.9	3.5	16	17	150	5 7/8	24	50	2.5	800	800	800	800	800	570	440	M8–M16
PC3-80-0-560	88.9	3.5	12	15	160	6 5/16	18	40	1.2	390	390	390	390	290	230	170	M8–M16
PC3-80-1-560	88.9	3.5	16	17	160	6 5/16	24	50	2.6	800	800	800	800	800	770	600	M8–M16
PC3-80-2-560	88.9	3.5	16	17	160	6 5/16	24	50	2.6	800	800	800	800	800	770	600	M8–M16
PC3-80-0-600	88.9	3.5	12	15	160	6 5/16	18	50	2.5	390	390	390	390	390	390	390	M8–M16
PC3-80-1-600	88.9	3.5	16	17	160	6 5/16	24	50	2.6	800	800	800	800	800	770	600	M8–M16
PC3-80-2-600	88.9	3.5	16	17	160	6 5/16	24	50	2.6	800	800	800	800	800	770	600	M8–M16
PC3-90-0-400	101.6	4	12	15	170	6 11/16	18	35	1.0	320	290						M8–M16
PC3-90-1-400	101.6	4	16	17	170	6 11/16	24	40	1.4	490	450						M8–M16
PC3-90-2-400	101.6	4	16	17	170	6 11/16	24	40	1.8	800	800						M8–M16
PC3-90-0-490	101.6	4	12	15	180	7 1/16	18	40	1.3	390	390	390	310	180	130	110	M8–M16
PC3-90-1-490	101.6	4	16	17	180	7 1/16	24	40	1.4	510	510	440	310	190	140	110	M8–M16
PC3-90-2-490	101.6	4	16	17	180	7 1/16	24	50	2.8	800	800	800	800	730	530	410	M8–M16
PC3-90-0-530	101.6	4	12	15	180	7 1/16	18	40	1.3	390	390	390	310	180	130	110	M8–M16
PC3-90-1-530	101.6	4	16	17	180	7 1/16	24	50	2.8	800	800	800	800	730	530	410	M8–M16
PC3-90-2-530	101.6	4	16	17	180	7 1/16	24	50	2.8	800	800	800	800	730	530	410	M8–M16
PC3-90-0-560	101.6	4	12	15	180	7 1/16	18	40	1.3	390	390	390	330	230	190	140	M8–M16
PC3-90-1-560	101.6	4	16	17	180	7 1/16	24	50	2.8	800	800	800	800	800	720	550	M8–M16
PC3-90-2-560	101.6	4	16	17	180	7 1/16	24	50	2.8	800	800	800	800	800	720	550	M8–M16
PC3-90-0-600	101.6	4	12	15	180	7 1/16	18	50	2.7	390	390	390	390	390	390	390	M8–M16
PC3-90-1-600	101.6	4	16	17	180	7 1/16	24	50	2.8	800	800	800	800	800	720	550	M8–M16
PC3-90-2-600	101.6	4	16	17	180	7 1/16	24	50	2.8	800	800	800	800	800	720	550	M8–M16

Bold part numbers indicate a stocked item.

PC3 PIPE CLAMP THREE BOLT TYPE

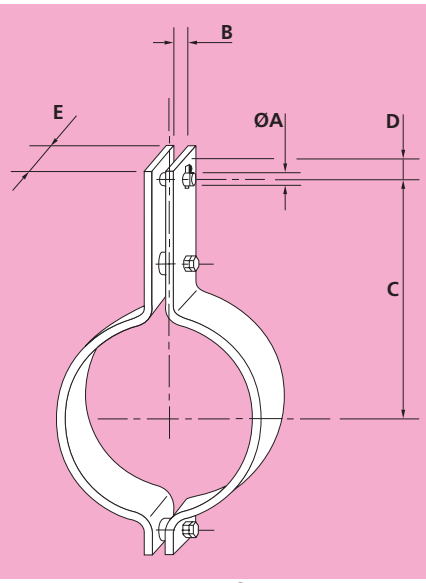

Material: Carbon Steel to 400°C Alloy Steel above 400°C

Part Number	Pipe O/D		A	B	C		D	E	Weight	Load Capacity (kgf) at Temperature C							Compatible with Rod Sizes
	mm	in	mm	mm	mm	in	mm	mm	kgf	350	400	490	530	560	580	600	
PC3-100-0-400	114.3	4.5	12	15	180	7 1/16	18	35	1.0	270	240						M8–M16
PC3-100-1-400	114.3	4.5	16	17	180	7 1/16	24	40	1.5	470	430						M8–M16
PC3-100-2-400	114.3	4.5	16	17	180	7 1/16	24	40	1.9	800	740						M8–M16
PC3-100-3-400	114.3	4.5	20	20	180	7 1/16	30	60	4.3	1170	1170						M12–M24
PC3-100-0-490	114.3	4.5	12	15	190	7 1/2	18	40	1.4	390	390	390	300	180	130	100	M8–M16
PC3-100-1-490	114.3	4.5	16	17	190	7 1/2	24	40	1.5	490	490	430	300	180	130	110	M8–M16
PC3-100-2-490	114.3	4.5	16	17	190	7 1/2	24	50	3.0	800	800	800	800	650	460	350	M8–M16
PC3-100-3-490	114.3	4.5	20	20	190	7 1/2	30	50	3.1	1320	1320	1320	1170	740	530	400	M12–M24
PC3-100-0-530	114.3	4.5	12	15	190	7 1/2	18	40	1.4	390	390	390	300	180	130	100	M8–M16
PC3-100-1-530	114.3	4.5	16	17	190	7 1/2	24	50	3.0	800	800	800	800	650	460	350	M8–M16
PC3-100-2-530	114.3	4.5	16	17	190	7 1/2	24	50	3.0	800	800	800	800	650	460	350	M8–M16
PC3-100-3-530	114.3	4.5	20	20	190	7 1/2	30	50	3.1	1320	1320	1320	1170	740	530	400	M12–M24
PC3-100-0-560	114.3	4.5	12	15	190	7 1/2	18	50	2.9	390	390	390	390	390	390	390	M8–M16
PC3-100-1-560	114.3	4.5	16	17	190	7 1/2	24	50	3.0	800	800	800	800	790	630	490	M8–M16
PC3-100-2-560	114.3	4.5	16	17	190	7 1/2	24	50	3.0	800	800	800	800	790	630	490	M8–M16
PC3-100-3-560	114.3	4.5	20	20	190	7 1/2	30	60	3.7	1320	1320	1320	1320	1070	850	660	M12–M24
PC3-100-0-600	114.3	4.5	12	15	190	7 1/2	18	50	2.9	390	390	390	390	390	390	390	M8–M16
PC3-100-1-600	114.3	4.5	16	17	190	7 1/2	24	50	3.0	800	800	800	800	790	630	490	M8–M16
PC3-100-2-600	114.3	4.5	16	17	190	7 1/2	24	60	3.6	800	800	800	800	800	750	580	M8–M16
PC3-100-3-600	114.3	4.5	20	20	190	7 1/2	30	70	5.1	1320	1320	1320	1320	1320	1320	1090	M12–M24
PC3-125-0-400	141.3	5.5625	12	15	190	7 1/2	18	35	1.1	260	230						M8–M16
PC3-125-1-400	141.3	5.5625	16	17	190	7 1/2	24	40	2.1	680	610						M8–M16
PC3-125-2-400	141.3	5.5625	16	17	190	7 1/2	24	40	2.1	680	610						M8–M16
PC3-125-3-400	141.3	5.5625	20	20	190	7 1/2	30	60	4.7	1030	1030						M12–M24
PC3-125-0-490	141.3	5.5625	12	15	200	7 7/8	18	40	1.6	390	390	350	240	150	110	90	M8–M16
PC3-125-1-490	141.3	5.5625	16	17	200	7 7/8	24	50	3.3	800	800	800	800	590	420	330	M8–M16
PC3-125-2-490	141.3	5.5625	16	17	200	7 7/8	24	50	3.3	800	800	800	800	590	420	330	M8–M16
PC3-125-3-490	141.3	5.5625	20	20	200	7 7/8	30	50	3.4	1320	1320	1310	960	600	430	330	M12–M24
PC3-125-0-530	141.3	5.5625	12	15	200	7 7/8	18	40	1.6	390	390	350	240	150	110	90	M8–M16
PC3-125-1-530	141.3	5.5625	16	17	200	7 7/8	24	50	3.3	800	800	800	800	590	420	330	M8–M16
PC3-125-2-530	141.3	5.5625	16	17	200	7 7/8	24	50	3.3	800	800	800	800	590	420	330	M8–M16
PC3-125-3-530	141.3	5.5625	20	20	200	7 7/8	30	60	4.0	1320	1320	1320	1160	720	520	400	M12–M24
PC3-125-0-560	141.3	5.5625	12	15	210	8 1/4	18	50	3.3	390	390	390	390	390	390	390	M8–M16
PC3-125-1-560	141.3	5.5625	16	17	210	8 1/4	24	50	3.4	800	800	800	800	720	580	450	M8–M16
PC3-125-2-560	141.3	5.5625	16	17	210	8 1/4	24	50	3.4	800	800	800	800	720	580	450	M8–M16
PC3-125-3-560	141.3	5.5625	20	20	210	8 1/4	30	70	5.7	1320	1320	1320	1320	1320	1160	900	M12–M24
PC3-125-0-600	141.3	5.5625	12	15	210	8 1/4	18	50	3.3	390	390	390	390	390	390	390	M8–M16
PC3-125-1-600	141.3	5.5625	16	17	210	8 1/4	24	50	3.4	800	800	800	800	720	580	450	M8–M16
PC3-125-2-600	141.3	5.5625	16	17	210	8 1/4	24	60	4.0	800	800	800	800	800	690	530	M8–M16
PC3-125-3-600	141.3	5.5625	20	20	210	8 1/4	30	80	6.5	1320	1320	1320	1320	1320	1270	1030	M12–M24

PC3 PIPE CLAMP THREE BOLT TYPE

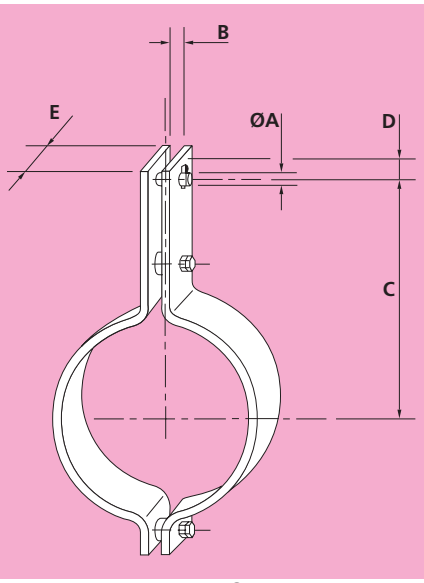

Material: Carbon Steel to 400°C Alloy Steel above 400°C

Part Number	Pipe O/D		A	B	C		D	E	Weight	Load Capacity (kgf) at Temperature C							Compatible with Rod
	mm	in	mm	mm	mm	in	mm	mm	kgf	350	400	490	530	560	580	600	Sizes
PC3-150-0-400	168.3	6.625	12	15	210	8 1/4	18	40	1.7	340	300						M8–M16
PC3-150-1-400	168.3	6.625	16	17	210	8 1/4	24	40	2.4	590	530						M8–M16
PC3-150-2-400	168.3	6.625	16	17	210	8 1/4	24	40	2.4	590	530						M8–M16
PC3-150-3-400	168.3	6.625	20	20	210	8 1/4	30	60	5.5	1320	1320						M12–M24
PC3-150-4-400	168.3	6.625	24	25	210	8 1/4	36	60	5.6	1830	1790						M12–M36
PC3-150-0-490	168.3	6.625	12	15	220	8 11/16	18	40	1.8	350	350	300	220	130	90	80	M8–M16
PC3-150-1-490	168.3	6.625	16	17	220	8 11/16	24	50	3.7	800	800	800	800	530	380	290	M8–M16
PC3-150-2-490	168.3	6.625	16	17	220	8 11/16	24	50	3.7	800	800	800	800	530	380	290	M8–M16
PC3-150-3-490	168.3	6.625	20	20	220	8 11/16	30	50	3.8	1300	1300	1150	850	530	380	290	M12–M24
PC3-150-4-490	168.3	6.625	24	25	220	8 11/16	36	70	6.4	1590	1590	1590	1540	1090	780	580	M12–M36
PC3-150-0-530	168.3	6.625	12	15	220	8 11/16	18	50	3.6	390	390	390	390	390	370	280	M8–M16
PC3-150-1-530	168.3	6.625	16	17	220	8 11/16	24	50	3.7	800	800	800	800	530	380	290	M8–M16
PC3-150-2-530	168.3	6.625	16	17	220	8 11/16	24	50	3.7	800	800	800	800	530	380	290	M8–M16
PC3-150-3-530	168.3	6.625	20	20	220	8 11/16	30	60	4.5	1320	1320	1320	1020	640	460	350	M12–M24
PC3-150-4-530	168.3	6.625	24	25	220	8 11/16	36	80	7.5	1830	1830	1830	1800	1140	810	610	M12–M36
PC3-150-0-560	168.3	6.625	12	15	240	9 7/16	18	50	3.8	390	390	390	390	390	390	390	M8–M16
PC3-150-1-560	168.3	6.625	16	17	240	9 7/16	24	50	3.8	800	800	800	800	640	510	390	M8–M16
PC3-150-2-560	168.3	6.625	16	17	240	9 7/16	24	50	3.8	800	800	800	800	640	510	390	M8–M16
PC3-150-3-560	168.3	6.625	20	20	240	9 7/16	30	70	6.5	1320	1320	1320	1320	1280	1020	790	M12–M24
PC3-150-4-560	168.3	6.625	24	25	240	9 7/16	36	80	9.7	1830	1830	1830	1830	1830	1750	1370	M12–M36
PC3-150-0-600	168.3	6.625	12	15	240	9 7/16	18	50	3.8	390	390	390	390	390	390	390	M8–M16
PC3-150-1-600	168.3	6.625	16	17	240	9 7/16	24	50	3.8	800	800	800	800	640	510	390	M8–M16
PC3-150-2-600	168.3	6.625	16	17	240	9 7/16	24	70	6.4	800	800	800	800	800	800	780	M8–M16
PC3-150-3-600	168.3	6.625	20	20	240	9 7/16	30	80	9.2	1320	1320	1320	1320	1320	1320	1150	M12–M24
PC3-150-4-600	168.3	6.625	24	25	240	9 7/16	36	100	12.0	1830	1830	1830	1830	1830	1830	1710	M12–M36
PC3-175-0-400	193.7	7.625	12	15	250	9 13/16	18	40	2.0	330	300						M8–M16
PC3-175-1-400	193.7	7.625	16	17	250	9 13/16	24	40	2.7	570	520						M8–M16
PC3-175-2-400	193.7	7.625	16	17	250	9 13/16	24	45	3.7	770	770						M8–M16
PC3-175-3-400	193.7	7.625	20	20	250	9 13/16	30	60	6.2	1320	1320						M12–M24
PC3-175-4-400	193.7	7.625	24	25	250	9 13/16	36	60	6.3	1640	1640						M12–M36
PC3-175-5-400	193.7	7.625	30	29	250	9 13/16	45	90	16.3	3050	3050						M12–M36
PC3-175-0-490	193.7	7.625	12	15	260	10 1/4	18	40	2.0	340	340	300	210	130	90	70	M8–M16
PC3-175-1-490	193.7	7.625	16	17	260	10 1/4	24	50	4.2	800	800	800	740	460	330	250	M8–M16
PC3-175-2-490	193.7	7.625	16	17	260	10 1/4	24	50	4.2	800	800	800	740	460	330	250	M8–M16
PC3-175-3-490	193.7	7.625	20	20	260	10 1/4	30	60	5.1	1320	1320	1200	900	560	400	310	M12–M24
PC3-175-4-490	193.7	7.625	24	25	260	10 1/4	36	70	7.4	1830	1830	1830	1520	970	690	510	M12–M36
PC3-175-5-490	193.7	7.625	30	29	260	10 1/4	45	80	8.7	2590	2590	2320	1760	1120	800	590	M12–M36
PC3-175-0-530	193.7	7.625	12	15	260	10 1/4	18	50	4.1	390	390	390	390	390	330	250	M8–M16
PC3-175-1-530	193.7	7.625	16	17	260	10 1/4	24	50	4.2	800	800	800	740	460	330	250	M8–M16
PC3-175-2-530	193.7	7.625	16	17	260	10 1/4	24	50	4.2	800	800	800	740	460	330	250	M8–M16
PC3-175-3-530	193.7	7.625	20	20	260	10 1/4	30	70	7.2	1320	1320	1320	1320	950	680	500	M12–M24
PC3-175-4-530	193.7	7.625	24	25	260	10 1/4	36	80	8.4	1830	1830	1830	1730	1110	790	590	M12–M36
PC3-175-5-530	193.7	7.625	30	29	260	10 1/4	45	80	10.8	3000	3000	3000	2830	1850	1300	940	M12–M36
PC3-175-0-560	193.7	7.625	12	15	260	10 1/4	18	50	4.1	390	390	390	390	390	390	340	M8–M16
PC3-175-1-560	193.7	7.625	16	17	260	10 1/4	24	50	4.2	800	800	800	770	560	450	350	M8–M16
PC3-175-2-560	193.7	7.625	16	17	260	10 1/4	24	50	4.2	800	800	800	770	560	450	350	M8–M16
PC3-175-3-560	193.7	7.625	20	20	260	10 1/4	30	70	7.2	1320	1320	1320	1320	1130	900	700	M12–M24
PC3-175-4-560	193.7	7.625	24	25	260	10 1/4	36	80	10.5	1830	1830	1830	1830	1830	1680	1320	M12–M36
PC3-175-5-560	193.7	7.625	30	29	260	10 1/4	45	100	13.4	3000	3000	3000	3000	2690	2130	1670	M12–M36
PC3-175-0-600	193.7	7.625	12	15	260	10 1/4	18	50	4.1	390	390	390	390	390	390	340	M8–M16
PC3-175-1-600	193.7	7.625	16	17	260	10 1/4	24	60	5.0	800	800	800	800	670	540	420	M8–M16
PC3-175-2-600	193.7	7.625	16	17	260	10 1/4	24	70	7.0	800	800	800	800	800	800	690	M8–M16
PC3-175-3-600	193.7	7.625	20	20	260	10 1/4	30	80	10.2	1320	1320	1320	1320	1320	1280	1110	M12–M24
PC3-175-4-600	193.7	7.625	24	25	260	10 1/4	36	100	13.0	1830	1830	1830	1830	1830	1830	1650	M12–M36
PC3-175-5-600	193.7	7.625	30	29	260	10 1/4	45	100	17.9	3050	3050	3050	3050	3050	3050	2880	M12–M36

Bold part numbers indicate a stocked item.

PC3 PIPE CLAMP THREE BOLT TYPE

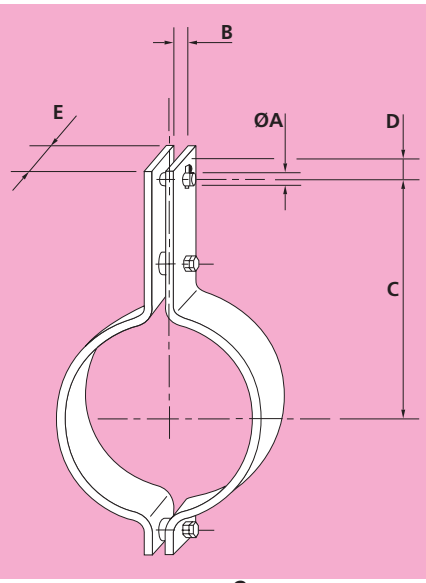

Material: Carbon Steel to 400°C Alloy Steel above 400°C

Part Number	Pipe O/D		A	B	C		D	E	Weight	Load Capacity (kgf) at Temperature C							Compatible with Rod Sizes
	mm	in	mm	mm	mm	in	mm	mm	kgf	350	400	490	530	560	580	600	
PC3-200-0-400	219.1	8.625	12	15	280	11	18	40	2.2	290	260						M8–M16
PC3-200-1-400	219.1	8.625	16	17	280	11	24	40	3.0	510	460						M8–M16
PC3-200-2-400	219.1	8.625	16	17	280	11	24	45	4.2	730	730						M8–M16
PC3-200-3-400	219.1	8.625	20	20	280	11	30	60	6.9	1320	1320						M12–M24
PC3-200-4-400	219.1	8.625	24	25	280	11	36	65	12.8	1830	1830						M12–M36
PC3-200-5-400	219.1	8.625	30	29	280	11	45	90	17.9	3050	3050						M12–M36
PC3-200-6-400	219.1	8.625	36	41	280	11	54	90	18.8	3810	3810						M20–M64
PC3-200-0-490	219.1	8.625	12	15	290	11 7/16	18	40	2.2	300	300	260	190	120	80	70	M8–M16
PC3-200-1-490	219.1	8.625	16	17	290	11 7/16	24	50	4.7	800	800	800	660	420	300	220	M8–M16
PC3-200-2-490	219.1	8.625	16	17	290	11 7/16	24	50	4.7	800	800	800	660	420	300	220	M8–M16
PC3-200-3-490	219.1	8.625	20	20	290	11 7/16	30	60	5.7	1200	1200	1060	800	500	360	270	M12–M24
PC3-200-4-490	219.1	8.625	24	25	290	11 7/16	36	70	8.2	1830	1830	1780	1360	870	620	460	M12–M36
PC3-200-5-490	219.1	8.625	30	29	290	11 7/16	45	80	11.9	2800	2800	2800	2540	1660	1170	850	M12–M36
PC3-200-6-490	219.1	8.625	36	41	290	11 7/16	54	100	15.5	3810	3810	3810	3280	2150	1510	1090	M20–M64
PC3-200-0-530	219.1	8.625	12	15	290	11 7/16	18	50	4.6	390	390	390	390	390	290	220	M8–M16
PC3-200-1-530	219.1	8.625	16	17	290	11 7/16	24	50	4.7	800	800	800	660	420	300	220	M8–M16
PC3-200-2-530	219.1	8.625	16	17	290	11 7/16	24	50	4.7	800	800	800	660	420	300	220	M8–M16
PC3-200-3-530	219.1	8.625	20	20	290	11 7/16	30	70	7.9	1240	1240	1240	1200	950	670	500	M12–M24
PC3-200-4-530	219.1	8.625	24	25	290	11 7/16	36	80	11.6	1830	1830	1830	1830	1640	1160	840	M12–M36
PC3-200-5-530	219.1	8.625	30	29	290	11 7/16	45	80	11.9	2800	2800	2800	2540	1660	1170	850	M12–M36
PC3-200-6-530	219.1	8.625	36	41	290	11 7/16	54	100	20.5	3810	3810	3810	3810	3810	2780	1990	M20–M64
PC3-200-0-560	219.1	8.625	12	15	290	11 7/16	18	50	4.6	390	390	390	390	390	390	310	M8–M16
PC3-200-1-560	219.1	8.625	16	17	290	11 7/16	24	50	4.7	800	800	800	690	500	400	310	M8–M16
PC3-200-2-560	219.1	8.625	16	17	290	11 7/16	24	60	5.6	800	800	800	800	600	480	370	M8–M16
PC3-200-3-560	219.1	8.625	20	20	290	11 7/16	30	70	7.9	1240	1240	1240	1200	1080	890	700	M12–M24
PC3-200-4-560	219.1	8.625	24	25	290	11 7/16	36	80	11.6	1830	1830	1830	1830	1830	1510	1190	M12–M36
PC3-200-5-560	219.1	8.625	30	29	290	11 7/16	45	100	14.8	2800	2800	2800	2800	2410	1910	1500	M12–M36
PC3-200-6-560	219.1	8.625	36	41	290	11 7/16	54	100	20.5	3810	3810	3810	3810	3810	3550	2820	M20–M64
PC3-200-0-600	219.1	8.625	12	15	290	11 7/16	18	50	4.6	390	390	390	390	390	390	310	M8–M16
PC3-200-1-600	219.1	8.625	16	17	290	11 7/16	24	60	5.6	800	800	800	800	600	480	370	M8–M16
PC3-200-2-600	219.1	8.625	16	17	290	11 7/16	24	70	7.8	800	800	800	800	800	800	620	M8–M16
PC3-200-3-600	219.1	8.625	20	20	290	11 7/16	30	80	11.3	1320	1320	1320	1320	1320	1230	1080	M12–M24
PC3-200-4-600	219.1	8.625	24	25	290	11 7/16	36	100	19.3	1830	1830	1830	1830	1830	1830	1830	M12–M36
PC3-200-5-600	219.1	8.625	30	29	290	11 7/16	45	100	19.7	3050	3050	3050	3050	3050	2960	2730	M12–M36
PC3-200-6-600	219.1	8.625	36	41	290	11 7/16	54	90	23.1	3810	3810	3810	3810	3810	3810	3810	M20–M64

PC3 PIPE CLAMP THREE BOLT TYPE

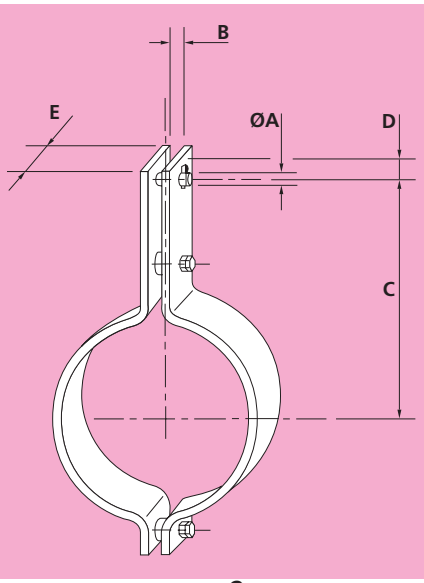

Material: Carbon Steel to 400°C Alloy Steel above 400°C

Part Number	Pipe O/D		A	B	C		D	E	Weight	Load Capacity (kgf) at Temperature C							Compatible with Rod Sizes
	mm	in	mm	mm	mm	in	mm	mm	kgf	350	400	490	530	560	580	600	
PC3-225-0-400	244.5	9.625	12	15	290	11 7/16	18	40	2.3	290	260						M8–M16
PC3-225-1-400	244.5	9.625	16	17	290	11 7/16	24	40	3.1	500	450						M8–M16
PC3-225-2-400	244.5	9.625	16	17	290	11 7/16	24	45	4.4	660	660						M8–M16
PC3-225-3-400	244.5	9.625	20	20	290	11 7/16	30	60	7.3	1320	1320						M12–M24
PC3-225-4-400	244.5	9.625	24	25	290	11 7/16	36	65	13.2	1730	1730						M12–M36
PC3-225-5-400	244.5	9.625	30	29	290	11 7/16	45	90	18.8	2770	2770						M12–M36
PC3-225-6-400	244.5	9.625	36	41	290	11 7/16	54	90	19.8	3810	3810						M20–M64
PC3-225-0-490	244.5	9.625	12	15	300	11 13/16	18	40	2.4	300	300	260	180	110	80	60	M8–M16
PC3-225-1-490	244.5	9.625	16	17	300	11 13/16	24	50	4.9	800	800	800	630	400	280	220	M8–M16
PC3-225-2-490	244.5	9.625	16	17	300	11 13/16	24	50	4.9	800	800	800	630	400	280	220	M8–M16
PC3-225-3-490	244.5	9.625	20	20	300	11 13/16	30	60	6.0	1130	1130	1040	770	480	340	260	M12–M24
PC3-225-4-490	244.5	9.625	24	25	300	11 13/16	36	80	9.9	1830	1830	1790	1350	860	610	460	M12–M36
PC3-225-5-490	244.5	9.625	30	29	300	11 13/16	45	80	12.7	2690	2690	2690	2220	1440	1020	740	M12–M36
PC3-225-6-490	244.5	9.625	36	41	300	11 13/16	54	100	16.4	3810	3810	3700	2870	1860	1320	960	M20–M64
PC3-225-0-530	244.5	9.625	12	15	300	11 13/16	18	50	4.9	390	390	390	390	390	280	210	M8–M16
PC3-225-1-530	244.5	9.625	16	17	300	11 13/16	24	50	4.9	800	800	800	630	400	280	220	M8–M16
PC3-225-2-530	244.5	9.625	16	17	300	11 13/16	24	50	4.9	800	800	800	630	400	280	220	M8–M16
PC3-225-3-530	244.5	9.625	20	20	300	11 13/16	30	70	8.4	1210	1210	1210	1180	810	580	430	M12–M24
PC3-225-4-530	244.5	9.625	24	25	300	11 13/16	36	80	12.3	1830	1830	1830	1830	1430	1010	740	M12–M36
PC3-225-5-530	244.5	9.625	30	29	300	11 13/16	45	100	15.7	2690	2690	2690	2690	1800	1270	930	M12–M36
PC3-225-6-530	244.5	9.625	36	41	300	11 13/16	54	100	21.6	3810	3810	3810	3810	3500	2450	1740	M20–M64
PC3-225-0-560	244.5	9.625	12	15	300	11 13/16	18	50	4.9	390	390	390	390	390	380	290	M8–M16
PC3-225-1-560	244.5	9.625	16	17	300	11 13/16	24	50	4.9	800	800	800	660	480	380	300	M8–M16
PC3-225-2-560	244.5	9.625	16	17	300	11 13/16	24	60	5.9	800	800	800	800	580	460	360	M8–M16
PC3-225-3-560	244.5	9.625	20	20	300	11 13/16	30	80	9.5	1210	1210	1210	1180	1070	880	690	M12–M24
PC3-225-4-560	244.5	9.625	24	25	300	11 13/16	36	80	12.3	1830	1830	1830	1830	1670	1330	1040	M12–M36
PC3-225-5-560	244.5	9.625	30	29	300	11 13/16	45	100	20.9	2960	2960	2960	2960	2960	2860	2410	M12–M36
PC3-225-6-560	244.5	9.625	36	41	300	11 13/16	54	100	21.6	3810	3810	3810	3810	3810	3140	2490	M20–M64
PC3-225-0-600	244.5	9.625	12	15	300	11 13/16	18	50	4.9	390	390	390	390	390	380	290	M8–M16
PC3-225-1-600	244.5	9.625	16	17	300	11 13/16	24	70	8.2	800	800	800	800	800	760	590	M8–M16
PC3-225-2-600	244.5	9.625	16	17	300	11 13/16	24	70	8.2	800	800	800	800	800	760	590	M8–M16
PC3-225-3-600	244.5	9.625	20	20	300	11 13/16	30	80	12.2	1320	1320	1320	1320	1320	1310	1020	M12–M24
PC3-225-4-600	244.5	9.625	24	25	300	11 13/16	36	100	20.5	1830	1830	1830	1830	1830	1830	1830	M12–M36
PC3-225-5-600	244.5	9.625	30	29	300	11 13/16	45	100	20.9	2960	2960	2960	2960	2960	2860	2410	M12–M36
PC3-225-6-600	244.5	9.625	36	41	300	11 13/16	54	100	27.0	3810	3810	3810	3810	3810	3810	3810	M20–M64

PC3 PIPE CLAMP THREE BOLT TYPE

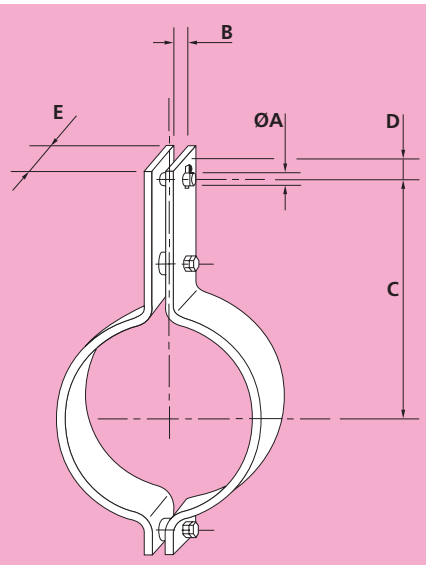

Material: Carbon Steel to 400°C Alloy Steel above 400°C

Part Number	Pipe O/D		A	B	C		D	E	Weight	Load Capacity (kgf) at Temperature C							Compatible with Rod
	mm	in	mm	mm	mm	in	mm	mm	kgf	350	400	490	530	560	580	600	Sizes
PC3-250-0-400	273	10.75	12	15	320	12 5/8	18	40	3.4	390	390						M8–M16
PC3-250-1-400	273	10.75	16	17	320	12 5/8	24	40	3.5	460	420						M8–M16
PC3-250-2-400	273	10.75	16	17	320	12 5/8	24	45	4.8	620	620						M8–M16
PC3-250-3-400	273	10.75	20	20	320	12 5/8	30	60	8.0	1320	1240						M12–M24
PC3-250-4-400	273	10.75	24	25	320	12 5/8	36	65	14.5	1590	1590						M12–M36
PC3-250-5-400	273	10.75	30	29	320	12 5/8	45	90	20.7	2670	2670						M12–M36
PC3-250-6-400	273	10.75	36	41	320	12 5/8	54	90	21.5	3810	3810						M20–M64
PC3-250-7-400	273	10.75	42	45	320	12 5/8	63	110	27.6	5470	5470						M30–M64
PC3-250-0-490	273	10.75	12	15	330	13	18	50	5.3	390	390	390	390	380	270	200	M8–M16
PC3-250-1-490	273	10.75	16	17	330	13	24	50	5.4	800	800	800	600	380	270	200	M8–M16
PC3-250-2-490	273	10.75	16	17	330	13	24	50	5.4	800	800	800	600	380	270	200	M8–M16
PC3-250-3-490	273	10.75	20	20	330	13	30	70	9.2	1120	1120	1120	1100	780	550	410	M12–M24
PC3-250-4-490	273	10.75	24	25	330	13	36	80	10.8	1830	1830	1670	1280	820	580	430	M12–M36
PC3-250-5-490	273	10.75	30	29	330	13	45	80	13.8	2480	2480	2480	2100	1380	970	700	M12–M36
PC3-250-6-490	273	10.75	36	41	330	13	54	100	23.5	3810	3810	3810	3810	3330	2320	1660	M20–M64
PC3-250-7-490	273	10.75	42	45	330	13	63	110	27.0	5470	5470	5470	5140	3480	2420	1730	M30–M64
PC3-250-0-530	273	10.75	12	15	330	13	18	50	5.3	390	390	390	390	380	270	200	M8–M16
PC3-250-1-530	273	10.75	16	17	330	13	24	50	5.4	800	800	800	600	380	270	200	M8–M16
PC3-250-2-530	273	10.75	16	17	330	13	24	50	5.4	800	800	800	600	380	270	200	M8–M16
PC3-250-3-530	273	10.75	20	20	330	13	30	70	9.2	1120	1120	1120	1100	780	550	410	M12–M24
PC3-250-4-530	273	10.75	24	25	330	13	36	80	13.5	1830	1830	1830	1830	1360	960	690	M12–M36
PC3-250-5-530	273	10.75	30	29	330	13	45	100	17.1	2480	2480	2480	2480	1720	1210	880	M12–M36
PC3-250-6-530	273	10.75	36	41	330	13	54	100	23.5	3810	3810	3810	3810	3330	2320	1660	M20–M64
PC3-250-7-530	273	10.75	42	45	330	13	63	110	33.4	5470	5470	5470	5470	5470	4260	3070	M30–M64
PC3-250-0-560	273	10.75	12	15	330	13	18	50	5.3	390	390	390	390	390	360	280	M8–M16
PC3-250-1-560	273	10.75	16	17	330	13	24	50	5.4	800	800	800	630	460	360	280	M8–M16
PC3-250-2-560	273	10.75	16	17	330	13	24	60	6.5	800	800	800	750	550	440	340	M8–M16
PC3-250-3-560	273	10.75	20	20	330	13	30	80	13.3	1320	1320	1320	1320	1320	1240	970	M12–M24
PC3-250-4-560	273	10.75	24	25	330	13	36	100	16.8	1830	1830	1830	1830	1830	1570	1230	M12–M36
PC3-250-5-560	273	10.75	30	29	330	13	45	100	22.8	2720	2720	2720	2720	2720	2640	2290	M12–M36
PC3-250-6-560	273	10.75	36	41	330	13	54	100	23.5	3810	3810	3810	3810	3750	2960	2350	M20–M64
PC3-250-7-560	273	10.75	42	45	330	13	63	110	33.4	5470	5470	5470	5470	5470	5260	4200	M30–M64
PC3-250-0-600	273	10.75	12	15	330	13	18	50	5.3	390	390	390	390	390	360	280	M8–M16
PC3-250-1-600	273	10.75	16	17	330	13	24	70	9.1	800	800	800	800	800	730	570	M8–M16
PC3-250-2-600	273	10.75	16	17	330	13	24	70	9.1	800	800	800	800	800	730	570	M8–M16
PC3-250-3-600	273	10.75	20	20	330	13	30	100	16.6	1320	1320	1320	1320	1320	1320	1210	M12–M24
PC3-250-4-600	273	10.75	24	25	330	13	36	100	22.4	1830	1830	1830	1830	1830	1830	1830	M12–M36
PC3-250-5-600	273	10.75	30	29	330	13	45	100	22.8	2720	2720	2720	2720	2720	2640	2290	M12–M36
PC3-250-6-600	273	10.75	36	41	330	13	54	100	29.4	3810	3810	3810	3810	3810	3810	3790	M20–M64
PC3-250-7-600	273	10.75	42	45	330	13	63	110	40.1	5470	5470	5470	5470	5470	5470	5470	M30–M64

Bold part numbers indicate a stocked item.

PC3 PIPE CLAMP THREE BOLT TYPE

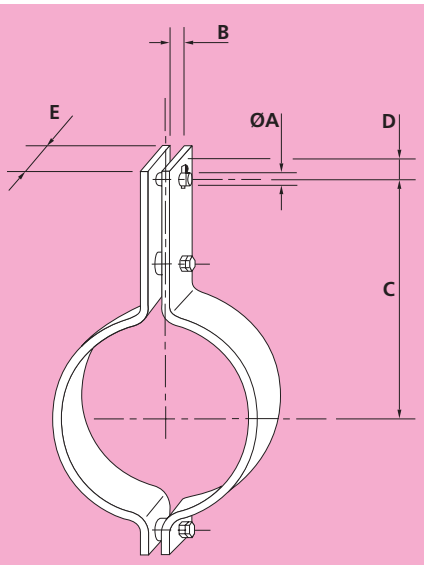

Material: Carbon Steel to 400°C Alloy Steel above 400°C

Part Number	Pipe O/D		A	B	C		D	E	Weight	Load Capacity (kgf) at Temperature C							Compatible with Rod Sizes
	mm	in	mm	mm	mm	in	mm	mm	kgf	350	400	490	530	560	580	600	
PC3-300-1-400	323.9	12.75	16	17	350	13 3/4	24	45	5.5	590	590						M8–M16
PC3-300-2-400	323.9	12.75	16	17	350	13 3/4	24	45	5.5	590	590						M8–M16
PC3-300-3-400	323.9	12.75	20	20	350	13 3/4	30	60	8.9	1180	1130						M12–M24
PC3-300-4-400	323.9	12.75	24	25	350	13 3/4	36	65	16.5	1830	1830						M12–M36
PC3-300-5-400	323.9	12.75	30	29	350	13 3/4	45	90	23.0	2340	2340						M12–M36
PC3-300-6-400	323.9	12.75	36	41	350	13 3/4	54	90	24.8	3810	3810						M20–M64
PC3-300-7-400	323.9	12.75	42	45	360	14 3/16	63	110	38.1	5470	5470						M30–M64
PC3-300-8-400	323.9	12.75	48	52	370	14 9/16	72	130	47.4	9820	9410						M42–M80
PC3-300-1-490	323.9	12.75	16	17	370	14 9/16	24	50	6.2	740	740	660	500	320	230	170	M8–M16
PC3-300-2-490	323.9	12.75	16	17	370	14 9/16	24	50	6.2	740	740	660	500	320	230	170	M8–M16
PC3-300-3-490	323.9	12.75	20	20	370	14 9/16	30	70	10.6	1320	1320	1320	1020	660	470	340	M12–M24
PC3-300-4-490	323.9	12.75	24	25	370	14 9/16	36	80	15.2	1830	1830	1830	1830	1270	890	640	M12–M36
PC3-300-5-490	323.9	12.75	30	29	370	14 9/16	45	100	19.7	3050	3050	2830	2240	1480	1040	740	M12–M36
PC3-300-6-490	323.9	12.75	36	41	370	14 9/16	54	100	26.6	3810	3810	3810	3810	2880	2000	1440	M20–M64
PC3-300-7-490	323.9	12.75	42	45	370	14 9/16	63	110	30.2	5470	5470	5470	4700	3200	2220	1600	M30–M64
PC3-300-8-490	323.9	12.75	48	52	370	14 9/16	72	120	42.8	9770	9770	9210	7760	5520	3930	2820	M42–M80
PC3-300-1-530	323.9	12.75	16	17	370	14 9/16	24	50	6.2	740	740	660	500	320	230	170	M8–M16
PC3-300-2-530	323.9	12.75	16	17	370	14 9/16	24	60	7.4	800	800	800	600	380	270	200	M8–M16
PC3-300-3-530	323.9	12.75	20	20	370	14 9/16	30	70	10.6	1320	1320	1320	1020	660	470	340	M12–M24
PC3-300-4-530	323.9	12.75	24	25	370	14 9/16	36	80	15.2	1830	1830	1830	1830	1270	890	640	M12–M36
PC3-300-5-530	323.9	12.75	30	29	370	14 9/16	45	100	26.1	3050	3050	3050	3050	2810	1950	1410	M12–M36
PC3-300-6-530	323.9	12.75	36	41	370	14 9/16	54	100	26.6	3810	3810	3810	3810	2880	2000	1440	M20–M64
PC3-300-7-530	323.9	12.75	42	45	370	14 9/16	63	110	37.5	5470	5470	5470	5470	5260	3740	2680	M30–M64
PC3-300-8-530	323.9	12.75	48	52	370	14 9/16	72	120	42.8	9770	9770	9210	7760	5520	3930	2820	M42–M80
PC3-300-1-560	323.9	12.75	16	17	390	15 3/8	24	50	6.4	740	740	670	520	380	300	240	M8–M16
PC3-300-2-560	323.9	12.75	16	17	390	15 3/8	24	70	10.6	800	800	800	800	800	680	530	M8–M16
PC3-300-3-560	323.9	12.75	20	20	390	15 3/8	30	80	15.3	1110	1110	1110	1110	1070	1000	890	M12–M24
PC3-300-4-560	323.9	12.75	24	25	390	15 3/8	36	100	19.4	1830	1830	1830	1830	1830	1450	1140	M12–M36
PC3-300-5-560	323.9	12.75	30	29	390	15 3/8	45	100	26.3	2390	2390	2390	2390	2390	2310	2120	M12–M36
PC3-300-6-560	323.9	12.75	36	41	390	15 3/8	54	90	30.5	3810	3810	3810	3810	3810	3810	3140	M20–M64
PC3-300-7-560	323.9	12.75	42	45	390	15 3/8	63	110	38.4	5470	5470	5470	5470	5470	4570	3650	M30–M64
PC3-300-8-560	323.9	12.75	48	52	390	15 3/8	72	120	52.2	10910	10910	10910	10910	8920	7190	5710	M42–M80
PC3-300-1-600	323.9	12.75	16	17	390	15 3/8	24	70	10.6	800	800	800	800	800	680	530	M8–M16
PC3-300-2-600	323.9	12.75	16	17	390	15 3/8	24	80	12.1	800	800	800	800	800	770	600	M8–M16
PC3-300-3-600	323.9	12.75	20	20	390	15 3/8	30	100	19.3	1320	1320	1320	1320	1320	1320	1130	M12–M24
PC3-300-4-600	323.9	12.75	24	25	390	15 3/8	36	100	25.9	1830	1830	1830	1830	1830	1830	1830	M12–M36
PC3-300-5-600	323.9	12.75	30	29	390	15 3/8	45	90	30.2	3050	3050	3050	3050	3050	3050	2900	M12–M36
PC3-300-6-600	323.9	12.75	36	41	390	15 3/8	54	110	37.0	3810	3810	3810	3810	3810	3810	3810	M20–M64
PC3-300-7-600	323.9	12.75	42	45	390	15 3/8	63	110	46.1	5470	5470	5470	5470	5470	5470	5420	M30–M64
PC3-300-8-600	323.9	12.75	48	52	390	15 3/8	72	160	68.7	10910	10910	10910	10910	10910	9590	7620	M42–M80

Bold part numbers indicate a stocked item.

PC3 PIPE CLAMP THREE BOLT TYPE

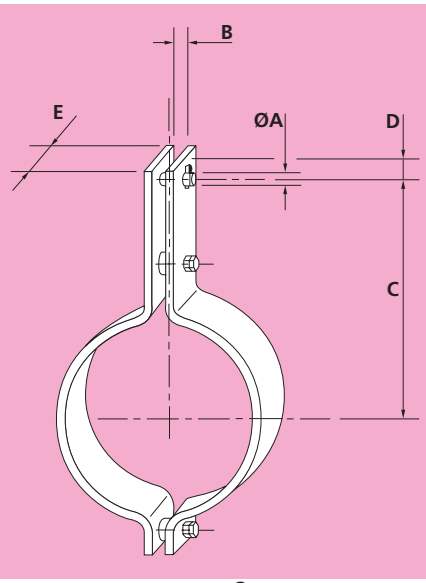

Material: Carbon Steel to 400°C Alloy Steel above 400°C

Part Number	Pipe O/D		A	B	C		D	E	Weight	Load Capacity (kgf) at Temperature C							Compatible with Rod Sizes
	mm	in	mm	mm	mm	in	mm	mm	kgf	350	400	490	530	560	580	600	
PC3-350-1-400	355.6	14	16	17	380	14 15/16	24	45	5.9	550	550						M8–M16
PC3-350-2-400	355.6	14	16	17	380	14 15/16	24	45	5.9	550	550						M8–M16
PC3-350-3-400	355.6	14	20	20	380	14 15/16	30	60	9.6	1100	1090						M12–M24
PC3-350-4-400	355.6	14	24	25	380	14 15/16	36	65	17.8	1830	1830						M12–M36
PC3-350-5-400	355.6	14	30	29	380	14 15/16	45	90	25.3	3050	3050						M12–M36
PC3-350-6-400	355.6	14	36	41	380	14 15/16	54	90	26.5	3810	3810						M20–M64
PC3-350-7-400	355.6	14	42	45	380	14 15/16	63	110	40.6	5470	5470						M30–M64
PC3-350-8-400	355.6	14	48	52	390	15 3/8	72	130	50.3	8900	8540						M42–M80
PC3-350-9-400	355.6	14	56	58	440	17 5/16	84	150	75.4	10000	10000						M42–M80
PC3-350-1-490	355.6	14	16	17	400	15 3/4	24	50	6.7	720	720	640	490	310	220	160	M8–M16
PC3-350-2-490	355.6	14	16	17	400	15 3/4	24	50	6.7	720	720	640	490	310	220	160	M8–M16
PC3-350-3-490	355.6	14	20	20	400	15 3/4	30	70	11.4	1320	1320	1270	990	640	450	330	M12–M24
PC3-350-4-490	355.6	14	24	25	400	15 3/4	36	80	16.5	1830	1830	1830	1710	1130	790	570	M12–M36
PC3-350-5-490	355.6	14	30	29	400	15 3/4	45	100	21.2	2980	2980	2710	2150	1430	1000	710	M12–M36
PC3-350-6-490	355.6	14	36	41	400	15 3/4	54	100	28.5	3810	3810	3810	3810	2760	1920	1390	M20–M64
PC3-350-7-490	355.6	14	42	45	400	15 3/4	63	110	40.4	5470	5470	5470	5470	4770	3400	2440	M30–M64
PC3-350-8-490	355.6	14	48	52	400	15 3/4	72	120	45.6	9280	9280	8750	7380	5260	3750	2690	M42–M80
PC3-350-9-490	355.6	14	56	58	410	16 1/8	84	140	54.8	10000	10000	10000	8690	6200	4420	3170	M42–M80
PC3-350-1-530	355.6	14	16	17	400	15 3/4	24	50	6.7	720	720	640	490	310	220	160	M8–M16
PC3-350-2-530	355.6	14	16	17	400	15 3/4	24	60	8.0	800	800	770	580	370	270	200	M8–M16
PC3-350-3-530	355.6	14	20	20	400	15 3/4	30	80	13.0	1320	1320	1320	1130	730	520	380	M12–M24
PC3-350-4-530	355.6	14	24	25	400	15 3/4	36	80	16.5	1830	1830	1830	1710	1130	790	570	M12–M36
PC3-350-5-530	355.6	14	30	29	400	15 3/4	45	100	28.1	3050	3050	3050	3050	2700	1880	1360	M12–M36
PC3-350-6-530	355.6	14	36	41	400	15 3/4	54	100	28.5	3810	3810	3810	3810	2760	1920	1390	M20–M64
PC3-350-7-530	355.6	14	42	45	400	15 3/4	63	110	40.4	5470	5470	5470	5470	4770	3400	2440	M30–M64
PC3-350-8-530	355.6	14	48	52	400	15 3/4	72	130	49.2	10050	10050	9480	7990	5700	4060	2910	M42–M80
PC3-350-9-530	355.6	14	56	58	420	16 9/16	84	140	66.1	10000	10000	10000	10000	9370	6870	4860	M42–M80
PC3-350-1-560	355.6	14	16	17	420	16 9/16	24	50	6.8	720	720	650	510	370	290	230	M8–M16
PC3-350-2-560	355.6	14	16	17	420	16 9/16	24	70	11.5	800	800	800	800	740	590	460	M8–M16
PC3-350-3-560	355.6	14	20	20	420	16 9/16	30	80	16.7	1320	1320	1320	1320	1280	1020	800	M12–M24
PC3-350-4-560	355.6	14	24	25	420	16 9/16	36	100	21.0	1830	1830	1830	1830	1620	1280	1010	M12–M36
PC3-350-5-560	355.6	14	30	29	420	16 9/16	45	100	28.4	2330	2330	2330	2330	2330	2290	1900	M12–M36
PC3-350-6-560	355.6	14	36	41	420	16 9/16	54	90	32.8	3810	3810	3810	3810	3810	3550	2830	M20–M64
PC3-350-7-560	355.6	14	42	45	420	16 9/16	63	120	44.9	5470	5470	5470	5470	5470	4520	3600	M30–M64
PC3-350-8-560	355.6	14	48	52	420	16 9/16	72	120	55.7	10910	10910	10910	10770	8490	6850	5440	M42–M80
PC3-350-9-560	355.6	14	56	58	420	16 9/16	84	140	66.1	10000	10000	10000	10000	10000	8070	6410	M42–M80
PC3-350-1-600	355.6	14	16	17	420	16 9/16	24	70	11.5	800	800	800	800	740	590	460	M8–M16
PC3-350-2-600	355.6	14	16	17	420	16 9/16	24	80	16.3	800	800	800	800	800	800	800	M8–M16
PC3-350-3-600	355.6	14	20	20	420	16 9/16	30	100	27.8	1320	1320	1320	1320	1320	1320	1320	M12–M24
PC3-350-4-600	355.6	14	24	25	420	16 9/16	36	100	28.0	1830	1830	1830	1830	1830	1830	1830	M12–M36
PC3-350-5-600	355.6	14	30	29	420	16 9/16	45	90	32.1	2520	2520	2520	2520	2520	2520	2490	M12–M36
PC3-350-6-600	355.6	14	36	41	420	16 9/16	54	120	43.4	3810	3810	3810	3810	3810	3810	3780	M20–M64
PC3-350-7-600	355.6	14	42	45	420	16 9/16	63	120	53.6	5470	5470	5470	5470	5470	5470	5470	M30–M64
PC3-350-8-600	355.6	14	48	52	420	16 9/16	72	120	74.3	10910	10910	10910	10910	10910	10910	10280	M42–M80
PC3-350-9-600	355.6	14	56	58	430	16 15/16	84	140	88.4	10000	10000	10000	10000	10000	10000	10000	M42–M80

PC3 PIPE CLAMP THREE BOLT TYPE

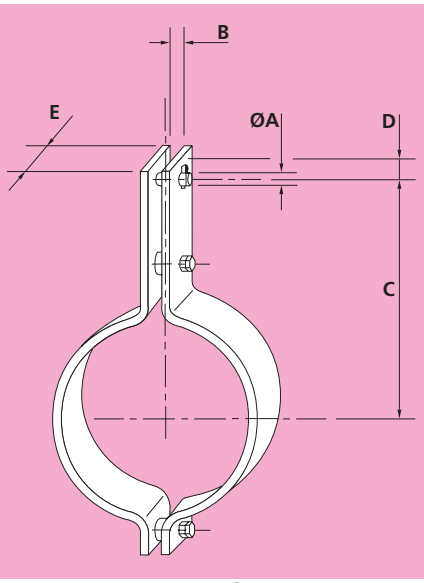

Material: Carbon Steel to 400°C Alloy Steel above 400°C

Part Number	Pipe O/D		A	B	C		D	E	Weight	Load Capacity (kgf) at Temperature C							Compatible with Rod Sizes
	mm	in	mm	mm	mm	in	mm	mm	kgf	350	400	490	530	560	580	600	
PC3-400-1-400	406.4	16	16	17	420	16 9/16	24	45	6.6	510	510						M8–M16
PC3-400-2-400	406.4	16	16	17	420	16 9/16	24	60	10.6	800	800						M8–M16
PC3-400-3-400	406.4	16	20	20	420	16 9/16	30	55	12.3	1130	1130						M12–M24
PC3-400-4-400	406.4	16	24	25	420	16 9/16	36	65	19.7	1830	1830						M12–M36
PC3-400-5-400	406.4	16	30	29	420	16 9/16	45	90	27.9	3000	3000						M12–M36
PC3-400-6-400	406.4	16	36	41	420	16 9/16	54	110	35.2	3810	3810						M20–M64
PC3-400-7-400	406.4	16	42	45	420	16 9/16	63	110	44.5	5470	5470						M30–M64
PC3-400-8-400	406.4	16	48	52	420	16 9/16	72	130	54.4	8150	7800						M42–M80
PC3-400-9-400	406.4	16	56	58	470	18 1/2	84	150	81.5	10000	10000						M42–M80
PC3-400-10-400	406.4	16	64	65	500	19 11/16	96	180	133.7	14730	14730						M42–M80
PC3-400-1-490	406.4	16	16	17	430	16 15/16	24	50	7.3	660	660	590	450	280	200	150	M8–M16
PC3-400-2-490	406.4	16	16	17	430	16 15/16	24	50	7.3	660	660	590	450	280	200	150	M8–M16
PC3-400-3-490	406.4	16	20	20	430	16 15/16	30	70	12.6	1200	1200	1070	830	530	380	280	M12–M24
PC3-400-4-490	406.4	16	24	25	430	16 15/16	36	80	18.1	1830	1830	1830	1560	1030	720	520	M12–M36
PC3-400-5-490	406.4	16	30	29	430	16 15/16	45	100	23.1	2750	2750	2490	1970	1290	910	650	M12–M36
PC3-400-6-490	406.4	16	36	41	430	16 15/16	54	100	31.6	3810	3810	3810	3470	2360	1640	1180	M20–M64
PC3-400-7-490	406.4	16	42	45	430	16 15/16	63	110	43.9	5470	5470	5470	5470	4330	3070	2210	M30–M64
PC3-400-8-490	406.4	16	48	52	430	16 15/16	72	120	49.7	8110	8110	7630	6420	4540	3220	2320	M42–M80
PC3-400-9-490	406.4	16	56	58	440	17 5/16	84	140	70.7	10000	10000	10000	10000	8510	6210	4400	M42–M80
PC3-400-10-490	406.4	16	64	65	470	18 1/2	96	160	86.2	15540	15540	14880	12660	9400	6860	4860	M42–M80
PC3-400-1-530	406.4	16	16	17	430	16 15/16	24	50	7.3	660	660	590	450	280	200	150	M8–M16
PC3-400-2-530	406.4	16	16	17	430	16 15/16	24	60	8.8	800	800	710	530	340	240	180	M8–M16
PC3-400-3-530	406.4	16	20	20	430	16 15/16	30	80	17.9	1320	1320	1320	1320	1010	710	510	M12–M24
PC3-400-4-530	406.4	16	24	25	430	16 15/16	36	100	22.5	1830	1830	1830	1830	1280	900	650	M12–M36
PC3-400-5-530	406.4	16	30	29	430	16 15/16	45	100	30.8	3050	3050	3050	3050	2300	1600	1150	M12–M36
PC3-400-6-530	406.4	16	36	41	430	16 15/16	54	110	34.7	3810	3810	3810	3810	2590	1800	1300	M20–M64
PC3-400-7-530	406.4	16	42	45	430	16 15/16	63	110	43.9	5470	5470	5470	5470	4330	3070	2210	M30–M64
PC3-400-8-530	406.4	16	48	52	430	16 15/16	72	140	57.5	9460	9460	8900	7490	5300	3760	2700	M42–M80
PC3-400-9-530	406.4	16	56	58	440	17 5/16	84	140	70.7	10000	10000	10000	10000	8510	6210	4400	M42–M80
PC3-400-10-530	406.4	16	64	65	490	19 5/16	96	160	116.3	17480	17480	17480	17480	17480	13980	9690	M42–M80
PC3-400-1-560	406.4	16	16	17	460	18 1/8	24	60	9.1	800	800	720	560	410	320	250	M8–M16
PC3-400-2-560	406.4	16	16	17	460	18 1/8	24	70	12.7	800	800	800	800	680	540	420	M8–M16
PC3-400-3-560	406.4	16	20	20	460	18 1/8	30	80	18.5	1320	1320	1320	1320	1170	930	730	M12–M24
PC3-400-4-560	406.4	16	24	25	460	18 1/8	36	100	30.9	1830	1830	1830	1830	1830	1830	1720	M12–M36
PC3-400-5-560	406.4	16	30	29	460	18 1/8	45	100	31.8	3050	3050	3050	3050	2580	2040	1620	M12–M36
PC3-400-6-560	406.4	16	36	41	460	18 1/8	54	90	36.1	3770	3770	3770	3770	3770	3240	2590	M20–M64
PC3-400-7-560	406.4	16	42	45	460	18 1/8	63	130	53.1	5470	5470	5470	5470	5470	4450	3550	M30–M64
PC3-400-8-560	406.4	16	48	52	460	18 1/8	72	130	66.0	10290	10290	10290	10210	8020	6460	5130	M42–M80
PC3-400-9-560	406.4	16	56	58	460	18 1/8	84	150	76.9	10000	10000	10000	10000	9750	7860	6250	M42–M80
PC3-400-10-560	406.4	16	64	65	490	19 5/16	96	160	116.3	17480	17480	17480	17480	17480	15520	12250	M42–M80
PC3-400-1-600	406.4	16	16	17	460	18 1/8	24	70	12.7	800	800	800	800	680	540	420	M8–M16
PC3-400-2-600	406.4	16	16	17	460	18 1/8	24	80	18.1	800	800	800	800	800	800	740	M8–M16
PC3-400-3-600	406.4	16	20	20	460	18 1/8	30	100	30.7	1320	1320	1320	1320	1320	1320	1320	M12–M24
PC3-400-4-600	406.4	16	24	25	460	18 1/8	36	100	30.9	1830	1830	1830	1830	1830	1830	1720	M12–M36
PC3-400-5-600	406.4	16	30	29	460	18 1/8	45	90	35.8	3050	3050	3050	3050	3050	3000	2390	M12–M36
PC3-400-6-600	406.4	16	36	41	460	18 1/8	54	100	48.0	3810	3810	3810	3810	3810	3810	3810	M20–M64
PC3-400-7-600	406.4	16	42	45	460	18 1/8	63	140	68.5	5470	5470	5470	5470	5470	5470	5470	M30–M64
PC3-400-8-600	406.4	16	48	52	460	18 1/8	72	120	81.0	10910	10910	10910	10910	10910	10910	9370	M42–M80
PC3-400-9-600	406.4	16	56	58	460	18 1/8	84	140	95.8	10000	10000	10000	10000	10000	10000	10000	M42–M80
PC3-400-10-600	406.4	16	64	65	490	19 5/16	96	180	130.1	17480	17480	17480	17480	17480	17460	13780	M42–M80

PC3 PIPE CLAMP THREE BOLT TYPE

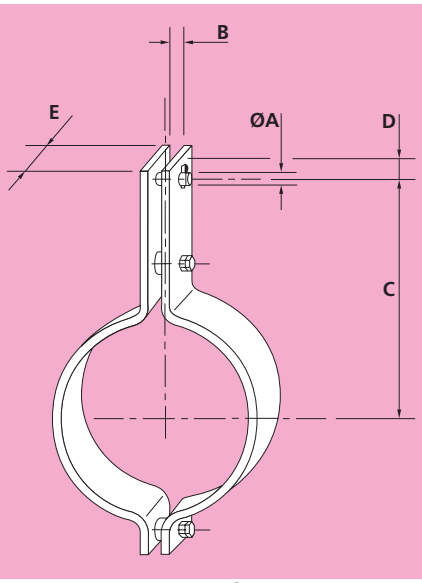

Material: Carbon Steel to 400°C Alloy Steel above 400°C

Part Number	Pipe O/D		A	B	C		D	E	Weight	Load Capacity (kgf) at Temperature C							Compatible with Rod Sizes
	mm	in	mm	mm	mm	in	mm	mm	kgf	350	400	490	530	560	580	600	
PC3-450-2-400	457.2	18	16	17	450	17 11/16	24	60	11.6	800	800						M8–M16
PC3-450-3-400	457.2	18	20	20	450	17 11/16	30	55	13.4	1040	1040						M12–M24
PC3-450-4-400	457.2	18	24	25	450	17 11/16	36	65	21.5	1830	1830						M12–M36
PC3-450-5-400	457.2	18	30	29	450	17 11/16	45	90	30.4	2870	2870						M12–M36
PC3-450-6-400	457.2	18	36	41	450	17 11/16	54	110	38.3	3810	3810						M20–M64
PC3-450-7-400	457.2	18	42	45	450	17 11/16	63	110	49.5	5470	5470						M30–M64
PC3-450-8-400	457.2	18	48	52	450	17 11/16	72	150	67.5	8220	8060						M42–M80
PC3-450-9-400	457.2	18	56	58	490	19 5/16	84	150	86.6	10000	10000						M42–M80
PC3-450-10-400	457.2	18	64	65	530	20 7/8	96	180	143.4	13670	13670						M42–M80
PC3-450-11-400	457.2	18	72	69	540	21 1/4	108	180	150.0	18610	18610						M42–M80
PC3-450-2-490	457.2	18	16	17	460	18 1/8	24	50	8.0	630	630	560	430	280	200	150	M8–M16
PC3-450-3-490	457.2	18	20	20	460	18 1/8	30	70	13.7	1130	1130	1020	790	520	360	270	M12–M24
PC3-450-4-490	457.2	18	24	25	460	18 1/8	36	80	19.6	1770	1770	1770	1490	990	700	490	M12–M36
PC3-450-5-490	457.2	18	30	29	460	18 1/8	45	100	33.5	3050	3050	3050	3050	2210	1530	1110	M12–M36
PC3-450-6-490	457.2	18	36	41	460	18 1/8	54	100	34.2	3810	3810	3810	3310	2260	1570	1130	M20–M64
PC3-450-7-490	457.2	18	42	45	460	18 1/8	63	110	48.8	5470	5470	5470	5220	3740	2670	1910	M30–M64
PC3-450-8-490	457.2	18	48	52	460	18 1/8	72	130	57.8	8210	8210	7750	6540	4690	3350	2400	M42–M80
PC3-450-9-490	457.2	18	56	58	480	18 1/8	84	140	78.7	10000	10000	10000	9870	7410	5450	3850	M42–M80
PC3-450-10-490	457.2	18	64	65	500	19 11/16	96	160	92.8	13890	13890	13350	11390	8550	6280	4440	M42–M80
PC3-450-11-490	457.2	18	72	69	540	21 1/4	108	180	147.3	23130	23130	23130	22490	18280	14050	9820	M42–M80
PC3-450-2-530	457.2	18	16	17	460	18 1/8	24	70	13.4	800	800	800	800	560	400	290	M8–M16
PC3-450-3-530	457.2	18	20	20	460	18 1/8	30	80	19.5	1320	1320	1320	1320	980	690	490	M12–M24
PC3-450-4-530	457.2	18	24	25	460	18 1/8	36	100	24.5	1770	1770	1770	1770	1240	870	620	M12–M36
PC3-450-5-530	457.2	18	30	29	460	18 1/8	45	100	33.5	3050	3050	3050	3050	2210	1530	1110	M12–M36
PC3-450-6-530	457.2	18	36	41	460	18 1/8	54	90	38.5	3810	3810	3810	3810	3360	2400	1720	M20–M64
PC3-450-7-530	457.2	18	42	45	460	18 1/8	63	120	53.0	5470	5470	5470	5470	4080	2910	2090	M30–M64
PC3-450-8-530	457.2	18	48	52	460	18 1/8	72	120	64.0	9370	9370	9370	8760	6570	4830	3410	M42–M80
PC3-450-9-530	457.2	18	56	58	480	18 7/8	84	140	78.7	10000	10000	10000	9870	7410	5450	3850	M42–M80
PC3-450-10-530	457.2	18	64	65	520	20 1/2	96	160	125.0	16240	16240	16240	16240	16240	12840	8970	M42–M80
PC3-450-11-530	457.2	18	72	69	540	21 1/4	108	180	147.3	23130	23130	23130	22490	18280	14050	9820	M42–M80
PC3-450-2-560	457.2	18	16	17	480	18 7/8	24	70	13.7	800	800	800	800	660	520	410	M8–M16
PC3-450-3-560	457.2	18	20	20	480	18 7/8	30	80	19.9	1320	1320	1320	1320	1120	890	700	M12–M24
PC3-450-4-560	457.2	18	24	25	480	18 7/8	36	100	33.2	1830	1830	1830	1830	1830	1830	1650	M12–M36
PC3-450-5-560	457.2	18	30	29	480	18 7/8	45	100	34.1	3050	3050	3050	3050	2460	1940	1550	M12–M36
PC3-450-6-560	457.2	18	36	41	480	18 7/8	54	90	39.2	3810	3810	3810	3810	3650	2920	2330	M20–M64
PC3-450-7-560	457.2	18	42	45	480	18 7/8	63	110	59.1	5470	5470	5470	5470	5470	5130	4080	M30–M64
PC3-450-8-560	457.2	18	48	52	480	18 7/8	72	130	70.4	9370	9370	9370	9370	7590	6130	4860	M42–M80
PC3-450-9-560	457.2	18	56	58	500	19 11/16	84	140	106.2	10000	10000	10000	10000	10000	10000	9730	M42–M80
PC3-450-10-560	457.2	18	64	65	520	20 1/2	96	160	125.0	16240	16240	16240	16240	16240	14160	11220	M42–M80
PC3-450-11-560	457.2	18	72	69	540	21 1/4	108	180	147.3	23130	23130	23130	22740	18890	15500	12280	M42–M80
PC3-450-2-600	457.2	18	16	17	480	18 7/8	24	80	19.5	800	800	800	800	800	770	680	M8–M16
PC3-450-3-600	457.2	18	20	20	480	18 7/8	30	100	33.1	1320	1320	1320	1320	1320	1320	1320	M12–M24
PC3-450-4-600	457.2	18	24	25	480	18 7/8	36	100	33.2	1830	1830	1830	1830	1830	1830	1650	M12–M36
PC3-450-5-600	457.2	18	30	29	480	18 7/8	45	90	38.4	3050	3050	3050	3050	3050	2870	2280	M12–M36
PC3-450-6-600	457.2	18	36	41	480	18 7/8	54	100	51.6	3810	3810	3810	3810	3810	3810	3810	M20–M64
PC3-450-7-600	457.2	18	42	45	480	18 7/8	63	140	73.3	5470	5470	5470	5470	5470	5470	5440	M30–M64
PC3-450-8-600	457.2	18	48	52	480	18 7/8	72	120	86.8	10410	10410	10410	10410	10410	10410	8580	M42–M80
PC3-450-9-600	457.2	18	56	58	490	19 5/16	84	140	103.4	10000	10000	10000	10000	10000	10000	10000	M42–M80
PC3-450-10-600	457.2	18	64	65	520	20 1/2	96	200	154.7	16240	16240	16240	16240	16240	16240	14020	M42–M80
PC3-450-11-600	457.2	18	72	69	550	21 5/8	108	180	184.5	24610	24610	24610	24610	24610	24610	21700	M42–M80

PC3 PIPE CLAMP THREE BOLT TYPE

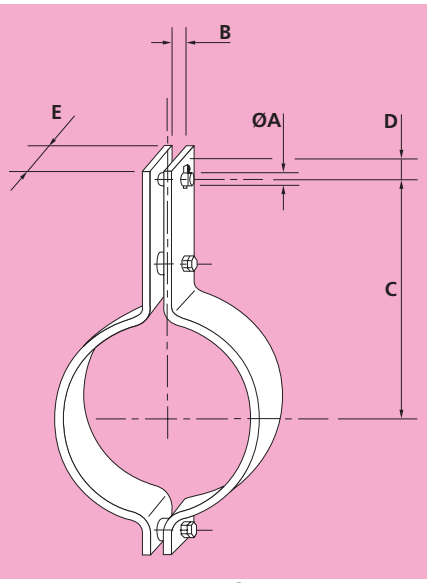

Material: Carbon Steel to 400°C Alloy Steel above 400°C

Part Number	Pipe O/D		A	B	C		D	E	Weight	Load Capacity (kgf) at Temperature C							Compatible with Rod
	mm	in	mm	mm	mm	in	mm	mm	kgf	350	400	490	530	560	580	600	Sizes
PC3-500-2-400	508.0	20	16	17	470	18 1/2	24	60	12.4	800	800						M8–M16
PC3-500-3-400	508.0	20	20	20	470	18 1/2	30	55	14.6	1200	1130						M12–M24
PC3-500-4-400	508.0	20	24	25	470	18 1/2	36	65	23.0	1750	1750						M12–M36
PC3-500-5-400	508.0	20	30	29	470	18 1/2	45	90	32.5	2660	2660						M12–M36
PC3-500-6-400	508.0	20	36	41	470	18 1/2	54	110	40.8	3810	3680						M20–M64
PC3-500-7-400	508.0	20	42	45	470	18 1/2	63	110	52.7	5470	5470						M30–M64
PC3-500-8-400	508.0	20	48	52	470	18 1/2	72	150	71.7	7580	7580						M42–M80
PC3-500-9-400	508.0	20	56	58	520	20 1/2	84	150	92.7	10000	10000						M42–M80
PC3-500-10-400	508.0	20	64	65	560	22 1/16	96	180	155.9	17240	17240						M42–M80
PC3-500-11-400	508.0	20	72	69	580	22 13/16	108	180	164.7	21590	21390						M42–M80
PC3-500-12-400	508.0	20	80	77	590	23 1/4	120	200	186.3	24240	24020						M72–M80
PC3-500-2-490	508.0	20	16	17	480	18 7/8	24	50	8.6	610	610	540	420	270	190	140	M8–M16
PC3-500-3-490	508.0	20	20	20	480	18 7/8	30	80	16.8	1230	1230	1120	880	580	410	290	M12–M24
PC3-500-4-490	508.0	20	24	25	480	18 7/8	36	80	21.0	1640	1640	1640	1450	970	680	480	M12–M36
PC3-500-5-490	508.0	20	30	29	480	18 7/8	45	100	35.8	2960	2960	2960	2960	2140	1490	1080	M12–M36
PC3-500-6-490	508.0	20	36	41	480	18 7/8	54	110	40.3	3810	3810	3810	3280	2260	1570	1140	M20–M64
PC3-500-7-490	508.0	20	42	45	480	18 7/8	63	110	51.9	5470	5470	5470	4960	3590	2580	1840	M30–M64
PC3-500-8-490	508.0	20	48	52	480	18 7/8	72	140	66.3	7940	7940	7530	6370	4620	3320	2370	M42–M80
PC3-500-9-490	508.0	20	56	58	510	20 1/16	84	140	84.5	10000	10000	10000	8980	6810	5030	3550	M42–M80
PC3-500-10-490	508.0	20	64	65	540	21 1/4	96	160	132.1	14900	14900	14900	14900	14900	12310	8670	M42–M80
PC3-500-11-490	508.0	20	72	69	560	22 1/16	108	180	155.3	21190	21190	21190	21190	17410	13440	9470	M42–M80
PC3-500-12-490	508.0	20	80	77	570	22 7/16	120	200	179.0	26440	26440	25930	23080	18920	14600	10290	M72–M80
PC3-500-2-530	508.0	20	16	17	480	18 7/8	24	70	14.4	760	760	760	760	550	390	280	M8–M16
PC3-500-3-530	508.0	20	20	20	480	18 7/8	30	80	20.9	1320	1320	1320	1320	960	670	470	M12–M24
PC3-500-4-530	508.0	20	24	25	480	18 7/8	36	100	26.2	1640	1640	1640	1640	1210	840	600	M12–M36
PC3-500-5-530	508.0	20	30	29	480	18 7/8	45	100	35.8	2960	2960	2960	2960	2140	1490	1080	M12–M36
PC3-500-6-530	508.0	20	36	41	480	18 7/8	54	90	41.3	3810	3810	3810	3810	3070	2210	1580	M20–M64
PC3-500-7-530	508.0	20	42	45	480	18 7/8	63	120	56.4	5470	5470	5470	5410	3920	2820	2010	M30–M64
PC3-500-8-530	508.0	20	48	52	480	18 7/8	72	120	68.4	8900	8900	8900	7950	6030	4460	3140	M42–M80
PC3-500-9-530	508.0	20	56	58	510	20 1/16	84	160	95.9	10000	10000	10000	10000	7780	5750	4050	M42–M80
PC3-500-10-530	508.0	20	64	65	540	21 1/4	96	160	132.1	14900	14900	14900	14900	14900	12310	8670	M42–M80
PC3-500-11-530	508.0	20	72	69	560	22 1/16	108	180	155.3	21190	21190	21190	21190	17410	13440	9470	M42–M80
PC3-500-12-530	508.0	20	80	77	570	22 7/16	120	200	179.0	26440	26440	25930	23080	18920	14600	10290	M72–M80
PC3-500-2-560	508.0	20	16	17	510	20 1/16	24	70	14.8	760	760	760	760	640	510	400	M8–M16
PC3-500-3-560	508.0	20	20	20	510	20 1/16	30	80	21.5	1320	1320	1320	1320	1090	860	680	M12–M24
PC3-500-4-560	508.0	20	24	25	510	20 1/16	36	100	36.0	1830	1830	1830	1830	1830	1830	1490	M12–M36
PC3-500-5-560	508.0	20	30	29	510	20 1/16	45	100	36.7	2960	2960	2960	2960	2370	1870	1500	M12–M36
PC3-500-6-560	508.0	20	36	41	510	20 1/16	54	100	46.9	3810	3810	3810	3810	3690	2950	2350	M20–M64
PC3-500-7-560	508.0	20	42	45	510	20 1/16	63	110	63.6	5470	5470	5470	5470	5470	4700	3730	M30–M64
PC3-500-8-560	508.0	20	48	52	510	20 1/16	72	140	81.3	8900	8900	8900	8900	7470	6040	4790	M42–M80
PC3-500-9-560	508.0	20	56	58	520	20 1/2	84	140	112.5	10000	10000	10000	10000	10000	10000	9310	M42–M80
PC3-500-10-560	508.0	20	64	65	540	21 1/4	96	160	132.1	14900	14900	14900	14900	14900	13500	10730	M42–M80
PC3-500-11-560	508.0	20	72	69	560	22 1/16	108	190	163.5	21190	21190	21190	21190	18920	15560	12370	M42–M80
PC3-500-12-560	508.0	20	80	77	570	22 7/16	120	240	212.4	29180	29180	29180	28000	23380	19220	15280	M72–M80
PC3-500-2-600	508.0	20	16	17	510	20 1/16	24	80	21.1	800	800	800	800	800	790	680	M8–M16
PC3-500-3-600	508.0	20	20	20	510	20 1/16	30	100	35.9	1320	1320	1320	1320	1320	1320	1320	M12–M24
PC3-500-4-600	508.0	20	24	25	510	20 1/16	36	110	39.6	1830	1830	1830	1830	1830	1830	1640	M12–M36
PC3-500-5-600	508.0	20	30	29	510	20 1/16	45	100	45.9	3050	3050	3050	3050	3050	3050	2440	M12–M36
PC3-500-6-600	508.0	20	36	41	510	20 1/16	54	110	61.7	3810	3810	3810	3810	3810	3810	3810	M20–M64
PC3-500-7-600	508.0	20	42	45	510	20 1/16	63	160	91.5	5470	5470	5470	5470	5470	5470	5430	M30–M64
PC3-500-8-600	508.0	20	48	52	510	20 1/16	72	120	93.3	9830	9830	9830	9830	9830	9830	7930	M42–M80
PC3-500-9-600	508.0	20	56	58	520	20 1/2	84	140	110.6	9760	9760	9760	9760	9760	9760	9670	M42–M80
PC3-500-10-600	508.0	20	64	65	540	21 1/4	96	200	163.6	14900	14900	14900	14900	14900	14900	13410	M42–M80
PC3-500-11-600	508.0	20	72	69	580	22 13/16	108	180	196.7	23020	23020	23020	23020	23020	23020	20110	M42–M80
PC3-500-12-600	508.0	20	80	77	580	22 13/16	120	200	220.2	23080	23080	23080	23080	23080	23080	23080	M72–M80

PC3 PIPE CLAMP THREE BOLT TYPE

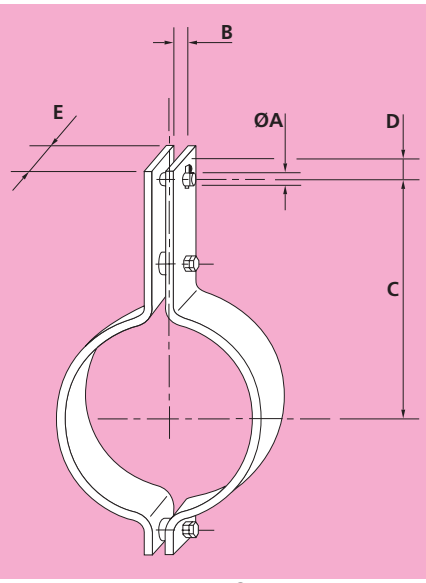

Material: Carbon Steel to 400°C Alloy Steel above 400°C

Part Number	Pipe O/D		A	B	C		D	E	Weight	Load Capacity (kgf) at Temperature C							Compatible with Rod Sizes
	mm	in	mm	mm	mm	in	mm	mm	kgf	350	400	490	530	560	580	600	
PC3-550-3-400	558.8	22	20	20	500	19 11/16	30	55	15.7	1130	1060						M12–M24
PC3-550-4-400	558.8	22	24	25	500	19 11/16	36	65	24.6	1650	1650						M12–M36
PC3-550-5-400	558.8	22	30	29	500	19 11/16	45	90	34.8	2510	2510						M12–M36
PC3-550-6-400	558.8	22	36	41	500	19 11/16	54	110	54.3	3810	3810						M20–M64
PC3-550-7-400	558.8	22	42	45	500	19 11/16	63	130	65.9	5470	5470						M30–M64
PC3-550-8-400	558.8	22	48	52	520	20 1/2	72	150	94.7	10160	9870						M42–M80
PC3-550-9-400	558.8	22	56	58	550	21 5/8	84	150	98.5	10000	9950						M42–M80
PC3-550-10-400	558.8	22	64	65	590	23 1/4	96	180	165.0	16090	16090						M42–M80
PC3-550-11-400	558.8	22	72	69	610	24	108	180	173.9	20280	20090						M42–M80
PC3-550-12-400	558.8	22	80	77	620	24 7/16	120	220	214.8	23470	23470						M72–M80
PC3-550-13-400	558.8	22	80	85	640	25 3/16	120	200	252.3	30830	30830						M72–M80
PC3-550-3-490	558.8	22	20	20	510	20 1/16	30	80	18.0	1170	1170	1050	820	540	380	270	M12–M24
PC3-550-4-490	558.8	22	24	25	510	20 1/16	36	100	28.5	1830	1830	1830	1560	1040	730	520	M12–M36
PC3-550-5-490	558.8	22	30	29	510	20 1/16	45	100	38.4	2790	2790	2790	2790	2000	1380	1000	M12–M36
PC3-550-6-490	558.8	22	36	41	510	20 1/16	54	110	43.1	3810	3810	3690	3070	2100	1460	1060	M20–M64
PC3-550-7-490	558.8	22	42	45	510	20 1/16	63	110	55.5	5470	5470	5470	4650	3340	2400	1710	M30–M64
PC3-550-8-490	558.8	22	48	52	510	20 1/16	72	120	73.0	8340	8340	8340	7460	5620	4140	2920	M42–M80
PC3-550-9-490	558.8	22	56	58	530	20 7/8	84	140	89.2	10000	10000	9850	8420	6340	4670	3290	M42–M80
PC3-550-10-490	558.8	22	64	65	580	22 13/16	96	160	144.1	19620	19620	19210	17050	13900	10700	7500	M42–M80
PC3-550-11-490	558.8	22	72	69	590	23 1/4	108	180	165.0	20230	20230	20230	19270	15700	12090	8470	M42–M80
PC3-550-12-490	558.8	22	80	77	600	23 5/8	120	200	189.8	24110	24110	23610	20960	17080	13150	9210	M72–M80
PC3-550-13-490	558.8	22	80	85	630	24 13/16	120	200	244.6	30830	30830	30830	30830	29060	23400	17390	M72–M80
PC3-550-3-530	558.8	22	20	20	510	20 1/16	30	80	22.5	1320	1320	1320	1320	890	620	440	M12–M24
PC3-550-4-530	558.8	22	24	25	510	20 1/16	36	100	38.0	1830	1830	1830	1830	1830	1380	1000	M12–M36
PC3-550-5-530	558.8	22	30	29	510	20 1/16	45	100	38.4	2790	2790	2790	2790	2000	1380	1000	M12–M36
PC3-550-6-530	558.8	22	36	41	510	20 1/16	54	90	44.2	3810	3810	3810	3810	2860	2050	1470	M20–M64
PC3-550-7-530	558.8	22	42	45	510	20 1/16	63	130	65.1	5470	5470	5470	5470	3950	2830	2020	M30–M64
PC3-550-8-530	558.8	22	48	52	510	20 1/16	72	120	73.0	8340	8340	8340	7460	5620	4140	2920	M42–M80
PC3-550-9-530	558.8	22	56	58	550	21 5/8	84	140	120.1	10000	10000	10000	10000	10000	9600	6730	M42–M80
PC3-550-10-530	558.8	22	64	65	570	22 7/16	96	160	140.8	14260	14260	14260	14260	14260	11060	7750	M42–M80
PC3-550-11-530	558.8	22	72	69	590	23 1/4	108	180	165.0	20230	20230	20230	19270	15700	12090	8470	M42–M80
PC3-550-12-530	558.8	22	80	77	600	23 1/4	120	220	207.6	26520	26520	25970	23050	18790	14460	10140	M72–M80
PC3-550-13-530	558.8	22	80	85	630	24 13/16	120	200	244.6	30830	30830	30830	30830	29060	23400	17390	M72–M80
PC3-550-3-560	558.8	22	20	20	540	21 1/4	30	80	23.0	1320	1320	1320	1320	1020	810	640	M12–M24
PC3-550-4-560	558.8	22	24	25	540	21 1/4	36	100	38.6	1770	1770	1770	1770	1770	1740	1390	M12–M36
PC3-550-5-560	558.8	22	30	29	540	21 1/4	45	110	43.2	2790	2790	2790	2790	2440	1930	1540	M12–M36
PC3-550-6-560	558.8	22	36	41	540	21 1/4	54	110	55.0	3810	3810	3810	3810	3790	3030	2420	M20–M64
PC3-550-7-560	558.8	22	42	45	540	21 1/4	63	110	67.9	5470	5470	5470	5470	5430	4390	3490	M30–M64
PC3-550-8-560	558.8	22	48	52	540	21 1/4	72	150	92.7	8340	8340	8340	8340	7480	6040	4800	M42–M80
PC3-550-9-560	558.8	22	56	58	550	21 5/8	84	140	120.1	10000	10000	10000	10000	10000	10000	8380	M42–M80
PC3-550-10-560	558.8	22	64	65	570	22 7/16	96	160	140.8	14260	14260	14260	14260	14260	12170	9650	M42–M80
PC3-550-11-560	558.8	22	72	69	590	23 1/4	108	200	182.4	20230	20230	20230	20230	18010	14790	11730	M42–M80
PC3-550-12-560	558.8	22	80	77	620	24 7/16	120	200	238.5	29380	29380	29380	29380	29380	25210	20440	M72–M80
PC3-550-13-560	558.8	22	80	85	630	24 13/16	120	200	244.6	30830	30830	30830	30830	29410	24760	20070	M72–M80
PC3-550-3-600	558.8	22	20	20	540	21 1/4	30	100	38.4	1320	1320	1320	1320	1320	1320	1320	M12–M24
PC3-550-4-600	558.8	22	24	25	540	21 1/4	36	90	43.5	1830	1830	1830	1830	1830	1830	1830	M12–M36
PC3-550-5-600	558.8	22	30	29	540	21 1/4	45	100	49.1	3000	3000	3000	3000	3000	2870	2290	M12–M36
PC3-550-6-600	558.8	22	36	41	540	21 1/4	54	120	71.8	3810	3810	3810	3810	3810	3810	3810	M20–M64
PC3-550-7-600	558.8	22	42	45	540	21 1/4	63	120	98.5	5470	5470	5470	5470	5470	5470	5470	M30–M64
PC3-550-8-600	558.8	22	48	52	540	21 1/4	72	130	107.5	9210	9210	9210	9210	9210	9210	8020	M42–M80
PC3-550-9-600	558.8	22	56	58	550	21 5/8	84	170	144.8	10000	10000	10000	10000	10000	10000	10000	M42–M80
PC3-550-10-600	558.8	22	64	65	590	23 1/4	96	180	199.3	15150	15150	15150	15150	15150	15150	15150	M42–M80
PC3-550-11-600	558.8	22	72	69	610	24	108	180	208.0	21450	21450	21450	21450	21450	21450	18770	M42–M80
PC3-550-12-600	558.8	22	80	77	620	24 7/16	120	230	272.5	29380	29380	29380	29380	29380	29000	23500	M72–M80
PC3-550-13-600	558.8	22	80	85	620	24 7/16	120	280	328.5	30030	30030	30030	30030	30030	30030	28840	M72–M80

PC3 PIPE CLAMP THREE BOLT TYPE

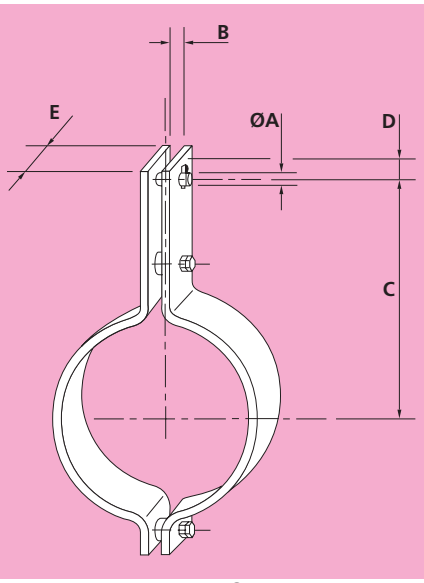

Material: Carbon Steel to 400°C Alloy Steel above 400°C

Part Number	Pipe O/D		A	B	C		D	E	Weight	Load Capacity (kgf) at Temperature C							Compatible with Rod Sizes
	mm	in	mm	mm	mm	in	mm	mm	kgf	350	400	490	530	560	580	600	
PC3-600-3-400	609.6	24	20	20	520	20 1/2	30	65	26.1	1320	1320						M12–M24
PC3-600-4-400	609.6	24	24	25	520	20 1/2	36	65	26.3	1620	1620						M12–M36
PC3-600-5-400	609.6	24	30	29	520	20 1/2	45	90	36.9	2360	2360						M12–M36
PC3-600-6-400	609.6	24	36	41	520	20 1/2	54	110	57.7	3810	3810						M20–M64
PC3-600-7-400	609.6	24	42	45	520	20 1/2	63	130	69.9	5470	5470						M30–M64
PC3-600-8-400	609.6	24	48	52	550	21 5/8	72	150	100.9	9320	9080						M42–M80
PC3-600-9-400	609.6	24	56	58	600	23 5/8	84	150	140.6	10000	10000						M42–M80
PC3-600-10-400	609.6	24	64	65	610	24	96	180	173.2	15020	15020						M42–M80
PC3-600-11-400	609.6	24	72	69	640	25 3/16	108	180	183.8	18700	18540						M42–M80
PC3-600-12-400	609.6	24	80	77	670	26 3/8	120	200	265.9	31290	31150						M72–M80
PC3-600-13-400	609.6	24	80	85	670	26 3/8	120	200	265.8	30830	30830						M72–M80
PC3-600-3-490	609.6	24	20	20	540	21 1/4	30	80	19.3	1130	1130	1020	810	530	370	270	M12–M24
PC3-600-4-490	609.6	24	24	25	540	21 1/4	36	100	30.5	1830	1830	1830	1530	1020	710	510	M12–M36
PC3-600-5-490	609.6	24	30	29	540	21 1/4	45	100	41.2	2730	2730	2730	2650	1830	1280	930	M12–M36
PC3-600-6-490	609.6	24	36	41	540	21 1/4	54	90	47.1	3810	3810	3810	3810	2790	2010	1440	M20–M64
PC3-600-7-490	609.6	24	42	45	540	21 1/4	63	120	64.2	5470	5470	5470	4880	3550	2560	1830	M30–M64
PC3-600-8-490	609.6	24	48	52	540	21 1/4	72	120	79.4	7970	7970	7690	6600	5020	3720	2620	M42–M80
PC3-600-9-490	609.6	24	56	58	560	22 1/16	84	150	101.1	10000	10000	10000	8650	6580	4880	3430	M42–M80
PC3-600-10-490	609.6	24	64	65	610	24	96	160	152.3	18660	18660	18310	16320	13410	10370	7330	M42–M80
PC3-600-11-490	609.6	24	72	69	620	24 7/16	108	180	174.3	18880	18880	18880	18430	15160	11720	8280	M42–M80
PC3-600-12-490	609.6	24	80	77	630	24 13/16	120	210	209.6	24030	24030	23570	21010	17280	13360	9440	M72–M80
PC3-600-13-490	609.6	24	80	85	660	26	120	200	258.1	30830	30830	30830	30830	27050	22000	16440	M72–M80
PC3-600-3-530	609.6	24	20	20	540	21 1/4	30	80	24.1	1320	1320	1320	1210	810	570	400	M12–M24
PC3-600-4-530	609.6	24	24	25	540	21 1/4	36	100	40.8	1830	1830	1830	1830	1820	1270	920	M12–M36
PC3-600-5-530	609.6	24	30	29	540	21 1/4	45	100	41.2	2730	2730	2730	2650	1830	1280	930	M12–M36
PC3-600-6-530	609.6	24	36	41	540	21 1/4	54	90	47.1	3810	3810	3810	3810	2790	2010	1440	M20–M64
PC3-600-7-530	609.6	24	42	45	540	21 1/4	63	110	70.9	5470	5470	5470	5470	4750	3520	2480	M30–M64
PC3-600-8-530	609.6	24	48	52	540	21 1/4	72	130	84.0	7810	7810	7810	7770	5910	4380	3080	M42–M80
PC3-600-9-530	609.6	24	56	58	580	22 13/16	84	140	127.3	10000	10000	10000	10000	10000	9320	6590	M42–M80
PC3-600-10-530	609.6	24	64	65	610	24	96	160	152.3	18660	18660	18310	16320	13410	10370	7330	M42–M80
PC3-600-11-530	609.6	24	72	69	620	24 7/16	108	180	174.3	18880	18880	18880	18430	15160	11720	8280	M42–M80
PC3-600-12-530	609.6	24	80	77	630	24 13/16	120	240	237.8	25880	25880	25880	24020	19740	15260	10790	M72–M80
PC3-600-13-530	609.6	24	80	85	660	26	120	200	258.1	30830	30830	30830	30830	27050	22000	16440	M72–M80
PC3-600-3-560	609.6	24	20	20	560	22 1/16	30	100	30.6	1320	1320	1320	1320	1150	910	720	M12–M24
PC3-600-4-560	609.6	24	24	25	560	22 1/16	36	100	40.9	1660	1660	1660	1660	1660	1650	1360	M12–M36
PC3-600-5-560	609.6	24	30	29	560	22 1/16	45	90	47.0	2920	2920	2920	2920	2920	2380	1890	M12–M36
PC3-600-6-560	609.6	24	36	41	560	22 1/16	54	110	58.2	3810	3810	3810	3810	3680	2950	2350	M20–M64
PC3-600-7-560	609.6	24	42	45	560	22 1/16	63	120	78.3	5470	5470	5470	5470	5470	4450	3530	M30–M64
PC3-600-8-560	609.6	24	48	52	560	22 1/16	72	160	104.2	7810	7810	7810	7810	7710	6250	4950	M42–M80
PC3-600-9-560	609.6	24	56	58	580	22 13/16	84	140	127.3	10000	10000	10000	10000	10000	10000	8120	M42–M80
PC3-600-10-560	609.6	24	64	65	610	24	96	160	152.3	18660	18660	18310	16500	13800	11350	9030	M42–M80
PC3-600-11-560	609.6	24	72	69	620	24 7/16	108	210	201.9	18880	18880	18880	18880	18190	14960	11910	M42–M80
PC3-600-12-560	609.6	24	80	77	650	25 9/16	120	200	252.0	27920	27920	27920	27920	27880	23610	19170	M72–M80
PC3-600-13-560	609.6	24	80	85	660	26	120	210	270.3	30830	30830	30830	30830	28750	24340	19770	M72–M80
PC3-600-3-600	609.6	24	20	20	560	22 1/16	30	100	40.8	1320	1320	1320	1320	1320	1320	1320	M12–M24
PC3-600-4-600	609.6	24	24	25	560	22 1/16	36	90	46.1	1780	1780	1780	1780	1780	1780	1780	M12–M36
PC3-600-5-600	609.6	24	30	29	560	22 1/16	45	110	57.3	2920	2920	2920	2920	2920	2900	2310	M12–M36
PC3-600-6-600	609.6	24	36	41	560	22 1/16	54	120	76.0	3810	3810	3810	3810	3810	3810	3810	M20–M64
PC3-600-7-600	609.6	24	42	45	560	22 1/16	63	120	104.4	5470	5470	5470	5470	5470	5470	5470	M30–M64
PC3-600-8-600	609.6	24	48	52	560	22 1/16	72	130	113.5	8620	8620	8620	8620	8620	8620	7780	M42–M80
PC3-600-9-600	609.6	24	56	58	580	22 13/16	84	170	153.6	10000	10000	10000	10000	10000	10000	9860	M42–M80
PC3-600-10-600	609.6	24	64	65	630	24 13/16	96	180	215.8	20230	20230	20230	20230	20230	20230	17540	M42–M80
PC3-600-11-600	609.6	24	72	69	640	25 3/16	108	190	232.0	20430	20430	20430	20430	20430	20430	18580	M42–M80
PC3-600-12-600	609.6	24	80	77	650	25 9/16	120	250	312.0	27920	27920	27920	27920	27920	27920	23960	M72–M80
PC3-600-13-600	609.6	24	80	85	660	26	120	300	379.8	30830	30830	30830	30830	30830	30830	28240	M72–M80

PC3 PIPE CLAMP THREE BOLT TYPE

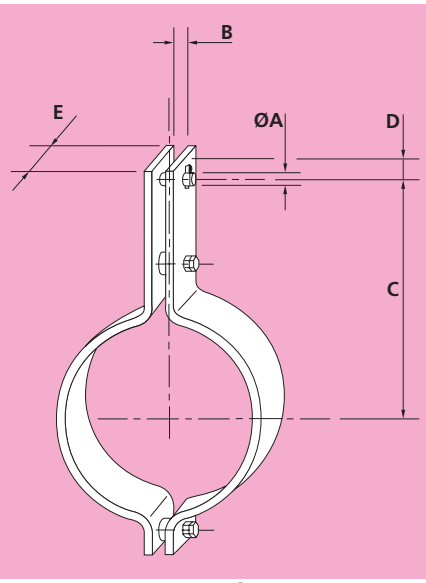

Material: Carbon Steel to 400°C Alloy Steel above 400°C

Part Number	Pipe O/D		A	B	C		D	E	Weight	Load Capacity (kgf) at Temperature C							Compatible with Rod Sizes
	mm	in	mm	mm	mm	in	mm	mm	kgf	350	400	490	530	560	580	600	
PC3-650-3-400	660.4	26	20	20	560	22 1/16	30	65	28.0	1320	1320						M12–M24
PC3-650-4-400	660.4	26	24	25	560	22 1/16	36	65	28.6	1830	1820						M12–M36
PC3-650-5-400	660.4	26	30	29	560	22 1/16	45	90	39.7	2340	2340						M12–M36
PC3-650-6-400	660.4	26	36	41	560	22 1/16	54	110	61.7	3810	3810						M20–M64
PC3-650-7-400	660.4	26	42	45	560	22 1/16	63	150	85.7	5470	5470						M30–M64
PC3-650-8-400	660.4	26	48	52	570	22 7/16	72	150	106.0	8870	8620						M42–M80
PC3-650-9-400	660.4	26	56	58	620	24 7/16	84	150	147.4	10000	10000						M42–M80
PC3-650-10-400	660.4	26	64	65	640	25 3/16	96	180	183.0	14530	14530						M42–M80
PC3-650-11-400	660.4	26	72	69	660	26	108	200	211.9	19740	19550						M42–M80
PC3-650-12-400	660.4	26	80	77	700	27 9/16	120	200	278.6	29700	29560						M72–M80
PC3-650-13-400	660.4	26	80	85	700	27 9/16	120	200	278.4	29940	29800						M72–M80
PC3-650-3-490	660.4	26	20	20	590	23 1/4	30	80	26.1	1320	1320	1320	1140	760	530	380	M12–M24
PC3-650-4-490	660.4	26	24	25	590	23 1/4	36	100	33.0	1830	1830	1800	1440	960	670	480	M12–M36
PC3-650-5-490	660.4	26	30	29	590	23 1/4	45	100	44.4	2600	2600	2600	2520	1730	1200	870	M12–M36
PC3-650-6-490	660.4	26	36	41	590	23 1/4	54	90	50.8	3810	3810	3810	3640	2630	1890	1350	M20–M64
PC3-650-7-490	660.4	26	42	45	590	23 1/4	63	130	74.9	5470	5470	5470	4780	3450	2480	1770	M30–M64
PC3-650-8-490	660.4	26	48	52	590	23 1/4	72	130	92.0	8220	8220	7910	6770	5120	3780	2660	M42–M80
PC3-650-9-490	660.4	26	56	58	590	23 1/4	84	160	114.1	10000	10000	9810	8400	6340	4680	3300	M42–M80
PC3-650-10-490	660.4	26	64	65	640	25 3/16	96	160	161.1	17180	17180	16840	14960	12230	9430	6630	M42–M80
PC3-650-11-490	660.4	26	72	69	650	25 9/16	108	180	186.9	18830	18830	18450	16400	13400	10330	7260	M42–M80
PC3-650-12-490	660.4	26	80	77	650	25 9/16	120	220	228.8	23920	23920	23440	20830	17030	13130	9230	M72–M80
PC3-650-13-490	660.4	26	80	85	690	27 3/16	120	200	270.7	30830	30830	30830	29420	25570	20660	15380	M72–M80
PC3-650-3-530	660.4	26	20	20	590	23 1/4	30	80	26.1	1320	1320	1320	1140	760	530	380	M12–M24
PC3-650-4-530	660.4	26	24	25	590	23 1/4	36	100	43.5	1580	1580	1580	1580	1580	1270	920	M12–M36
PC3-650-5-530	660.4	26	30	29	590	23 1/4	45	100	44.4	2600	2600	2600	2520	1730	1200	870	M12–M36
PC3-650-6-530	660.4	26	36	41	590	23 1/4	54	100	56.3	3810	3810	3810	3810	2920	2100	1500	M20–M64
PC3-650-7-530	660.4	26	42	45	590	23 1/4	63	110	76.2	5470	5470	5470	5470	4470	3300	2330	M30–M64
PC3-650-8-530	660.4	26	48	52	590	23 1/4	72	140	97.3	7630	7630	7630	7600	5740	4240	2990	M42–M80
PC3-650-9-530	660.4	26	56	58	610	24	84	140	135.0	10000	10000	10000	10000	10000	8460	5950	M42–M80
PC3-650-10-530	660.4	26	64	65	640	25 3/16	96	160	161.1	17180	17180	16840	14960	12230	9430	6630	M42–M80
PC3-650-11-530	660.4	26	72	69	650	25 9/16	108	200	206.6	20920	20920	20500	18220	14890	11480	8070	M42–M80
PC3-650-12-530	660.4	26	80	77	670	26 3/8	120	200	263.2	26340	26340	26340	26340	26070	21070	15680	M72–M80
PC3-650-13-530	660.4	26	80	85	690	27 3/16	120	200	270.7	30830	30830	30830	29420	25570	20660	15380	M72–M80
PC3-650-3-560	660.4	26	20	20	610	24	30	100	33.0	1320	1320	1320	1320	1090	860	680	M12–M24
PC3-650-4-560	660.4	26	24	25	610	24	36	100	44.2	1580	1580	1580	1580	1580	1580	1280	M12–M36
PC3-650-5-560	660.4	26	30	29	610	24	45	90	50.7	2780	2780	2780	2780	2780	2240	1790	M12–M36
PC3-650-6-560	660.4	26	36	41	610	24	54	120	68.2	3810	3810	3810	3810	3790	3040	2420	M20–M64
PC3-650-7-560	660.4	26	42	45	610	24	63	130	90.9	5470	5470	5470	5470	5470	4540	3600	M30–M64
PC3-650-8-560	660.4	26	48	52	610	24	72	120	113.0	8380	8380	8380	8380	8380	8210	6520	M42–M80
PC3-650-9-560	660.4	26	56	58	610	24	84	140	135.0	10000	10000	10000	10000	10000	9300	7380	M42–M80
PC3-650-10-560	660.4	26	64	65	640	25 3/16	96	170	170.7	18090	18090	17890	16080	13400	11010	8740	M42–M80
PC3-650-11-560	660.4	26	72	69	670	26 3/8	108	180	234.7	25850	25850	25850	25850	23580	19890	16130	M42–M80
PC3-650-12-560	660.4	26	80	77	670	26 3/8	120	200	263.2	26340	26340	26340	26340	26340	22260	18050	M72–M80
PC3-650-13-560	660.4	26	80	85	690	27 3/16	120	220	296.3	30830	30830	30830	30830	28470	24020	19480	M72–M80
PC3-650-3-600	660.4	26	20	20	610	24	30	100	44.0	1320	1320	1320	1320	1320	1320	1270	M12–M24
PC3-650-4-600	660.4	26	24	25	610	24	36	90	49.8	1700	1700	1700	1700	1700	1700	1700	M12–M36
PC3-650-5-600	660.4	26	30	29	610	24	45	120	67.3	2780	2780	2780	2780	2780	2780	2380	M12–M36
PC3-650-6-600	660.4	26	36	41	610	24	54	130	88.8	3810	3810	3810	3810	3810	3810	3750	M20–M64
PC3-650-7-600	660.4	26	42	45	610	24	63	120	112.0	5470	5470	5470	5470	5470	5470	5470	M30–M64
PC3-650-8-600	660.4	26	48	52	610	24	72	140	131.3	8380	8380	8380	8380	8380	8380	7600	M42–M80
PC3-650-9-600	660.4	26	56	58	610	24	84	190	181.5	10000	10000	10000	10000	10000	10000	10000	M42–M80
PC3-650-10-600	660.4	26	64	65	650	25 9/16	96	180	225.8	19130	19130	19130	19130	19130	19130	16540	M42–M80
PC3-650-11-600	660.4	26	72	69	660	26	108	200	254.8	19310	19310	19310	19310	19310	19310	18440	M42–M80
PC3-650-12-600	660.4	26	80	77	670	26 3/8	120	260	338.5	26340	26340	26340	26340	26340	26340	23470	M72–M80
PC3-650-13-600	660.4	26	80	85	690	27 3/16	120	320	424.3	30830	30830	30830	30830	30830	30830	28330	M72–M80

PC3 PIPE CLAMP THREE BOLT TYPE

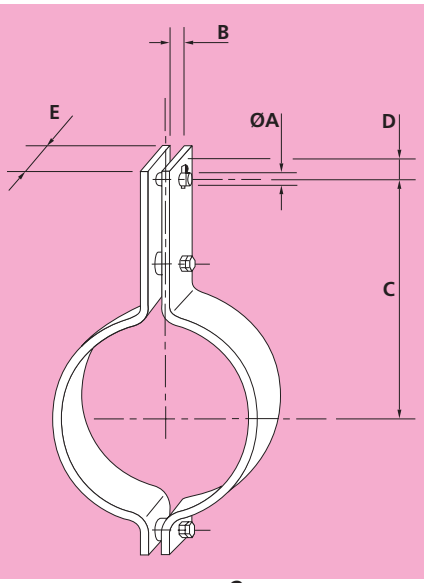

Material: Carbon Steel to 400°C Alloy Steel above 400°C

Part Number	Pipe O/D		A	B	C		D	E	Weight	Load Capacity (kgf) at Temperature C							Compatible with Rod
	mm	in	mm	mm	mm	in	mm	mm	kgf	350	400	490	530	560	580	600	Sizes
PC3-700-3-400	711.2	28	20	20	590	23 1/4	30	65	29.7	1320	1320						M12–M24
PC3-700-4-400	711.2	28	24	25	590	23 1/4	36	65	30.2	1830	1740						M12–M36
PC3-700-5-400	711.2	28	30	29	590	23 1/4	45	90	42.8	2420	2300						M12–M36
PC3-700-6-400	711.2	28	36	41	590	23 1/4	54	110	65.3	3810	3810						M20–M64
PC3-700-7-400	711.2	28	42	45	590	23 1/4	63	150	90.6	5470	5470						M30–M64
PC3-700-8-400	711.2	28	48	52	600	23 5/8	72	150	111.8	8470	8220						M42–M80
PC3-700-9-400	711.2	28	56	58	650	25 9/16	84	150	157.4	10000	10000						M42–M80
PC3-700-10-400	711.2	28	64	65	670	26 3/8	96	180	192.2	13810	13810						M42–M80
PC3-700-11-400	711.2	28	72	69	690	27 3/16	108	200	222.1	18830	18650						M42–M80
PC3-700-12-400	711.2	28	80	77	730	28 3/4	120	200	292.1	27670	27530						M72–M80
PC3-700-13-400	711.2	28	80	85	740	29 1/8	120	220	327.3	30000	29850						M72–M80
PC3-700-3-490	711.2	28	20	20	610	24	30	80	27.5	1320	1320	1320	1090	720	500	360	M12–M24
PC3-700-4-490	711.2	28	24	25	610	24	36	100	34.8	1750	1750	1600	1270	850	590	420	M12–M36
PC3-700-5-490	711.2	28	30	29	610	24	45	100	46.7	2490	2490	2490	2390	1630	1130	820	M12–M36
PC3-700-6-490	711.2	28	36	41	610	24	54	90	53.5	3810	3810	3810	3290	2360	1680	1210	M20–M64
PC3-700-7-490	711.2	28	42	45	610	24	63	130	78.6	5470	5470	5390	4550	3260	2330	1670	M30–M64
PC3-700-8-490	711.2	28	48	52	610	24	72	130	96.4	7850	7850	7550	6440	4830	3550	2510	M42–M80
PC3-700-9-490	711.2	28	56	58	630	24 13/16	84	140	141.2	10000	10000	10000	10000	10000	7980	5580	M42–M80
PC3-700-10-490	711.2	28	64	65	660	26	96	160	168.2	16410	16410	16060	14230	11560	8890	6210	M42–M80
PC3-700-11-490	711.2	28	72	69	680	26 3/4	108	190	206.4	18970	18970	18560	16450	13370	10270	7180	M42–M80
PC3-700-12-490	711.2	28	80	77	680	26 3/4	120	240	261.5	23700	23700	23630	20940	17020	13080	9140	M72–M80
PC3-700-13-490	711.2	28	80	85	720	28 3/8	120	200	284.2	30120	30120	29980	27280	23670	19000	14090	M72–M80
PC3-700-3-530	711.2	28	20	20	610	24	30	80	27.5	1320	1320	1320	1090	720	500	360	M12–M24
PC3-700-4-530	711.2	28	24	25	610	24	36	100	46.3	1830	1830	1830	1830	1620	1130	810	M12–M36
PC3-700-5-530	711.2	28	30	29	610	24	45	100	46.7	2490	2490	2490	2390	1630	1130	820	M12–M36
PC3-700-6-530	711.2	28	36	41	610	24	54	100	59.3	3810	3810	3810	3650	2620	1870	1340	M20–M64
PC3-700-7-530	711.2	28	42	45	610	24	63	110	80.0	5470	5470	5470	5470	4230	3110	2200	M30–M64
PC3-700-8-530	711.2	28	48	52	610	24	72	150	110.7	9060	9060	8710	7430	5580	4100	2900	M42–M80
PC3-700-9-530	711.2	28	56	58	630	24 13/16	84	140	141.2	10000	10000	10000	10000	10000	7980	5580	M42–M80
PC3-700-10-530	711.2	28	64	65	660	26	96	160	168.2	16410	16410	16060	14230	11560	8890	6210	M42–M80
PC3-700-11-530	711.2	28	72	69	680	26 3/4	108	210	227.1	20960	20960	20510	18180	14770	11350	7940	M42–M80
PC3-700-12-530	711.2	28	80	77	700	27 9/1	120	200	275.9	24990	24990	24990	24990	24770	19890	14750	M72–M80
PC3-700-13-530	711.2	28	80	85	720	28 3/8	120	210	297.7	30830	30830	30830	28640	24850	19950	14790	M72–M80
PC3-700-3-560	711.2	28	20	20	640	25 3/16	30	100	35.0	1320	1320	1320	1320	1030	820	640	M12–M24
PC3-700-4-560	711.2	28	24	25	640	25 3/16	36	100	47.2	1830	1830	1830	1830	1800	1420	1140	M12–M36
PC3-700-5-560	711.2	28	30	29	640	25 3/16	45	90	53.6	2660	2660	2660	2660	2660	2120	1690	M12–M36
PC3-700-6-560	711.2	28	36	41	640	25 3/16	54	100	72.5	3810	3810	3810	3810	3810	3440	2730	M20–M64
PC3-700-7-560	711.2	28	42	45	640	25 3/16	63	140	103.1	5470	5470	5470	5470	5470	4630	3680	M30–M64
PC3-700-8-560	711.2	28	48	52	640	25 3/16	72	120	120.8	10910	10910	10910	10910	9140	7510	5940	M42–M80
PC3-700-9-560	711.2	28	56	58	640	25 3/16	84	140	142.1	10000	10000	10000	10000	10000	8810	6980	M42–M80
PC3-700-10-560	711.2	28	64	65	660	26	96	180	188.4	17200	17200	17200	16190	13440	11030	8740	M42–M80
PC3-700-11-560	711.2	28	72	69	700	27 9/16	108	180	247.0	25030	25030	25030	25020	21810	18320	14840	M42–M80
PC3-700-12-560	711.2	28	80	77	700	27 9/16	120	200	275.9	24990	24990	24990	24990	24990	21070	17070	M72–M80
PC3-700-13-560	711.2	28	80	85	720	28 3/8	120	240	338.1	30830	30830	30830	30830	28750	24160	19570	M72–M80
PC3-700-3-600	711.2	28	20	20	640	25 3/16	30	100	46.6	1320	1320	1320	1320	1320	1320	1210	M12–M24
PC3-700-4-600	711.2	28	24	25	640	25 3/16	36	90	52.7	1630	1630	1630	1630	1630	1630	1620	M12–M36
PC3-700-5-600	711.2	28	30	29	640	25 3/16	45	100	71.4	2830	2830	2830	2830	2830	2830	2830	M12–M36
PC3-700-6-600	711.2	28	36	41	640	25 3/16	54	140	101.0	3810	3810	3810	3810	3810	3810	3810	M20–M64
PC3-700-7-600	711.2	28	42	45	640	25 3/16	63	120	118.2	5470	5470	5470	5470	5470	5470	5470	M30–M64
PC3-700-8-600	711.2	28	48	52	640	25 3/16	72	150	148.2	7980	7980	7980	7980	7980	7980	7700	M42–M80
PC3-700-9-600	711.2	28	56	58	640	25 3/16	84	200	201.0	10000	10000	10000	10000	10000	10000	9970	M42–M80
PC3-700-10-600	711.2	28	64	65	680	26 3/4	96	180	238.0	18540	18540	18540	18540	18540	18540	15200	M42–M80
PC3-700-11-600	711.2	28	72	69	690	27 3/16	108	220	294.5	18710	18710	18710	18710	18710	18710	18640	M42–M80
PC3-700-12-600	711.2	28	80	77	700	27 9/16	120	270	368.3	24990	24990	24990	24990	24990	24990	23040	M72–M80
PC3-700-13-600	711.2	28	80	85	720	28 3/8	120	350	486.3	30830	30830	30830	30830	30830	30830	28530	M72–M80

PC3 PIPE CLAMP THREE BOLT TYPE

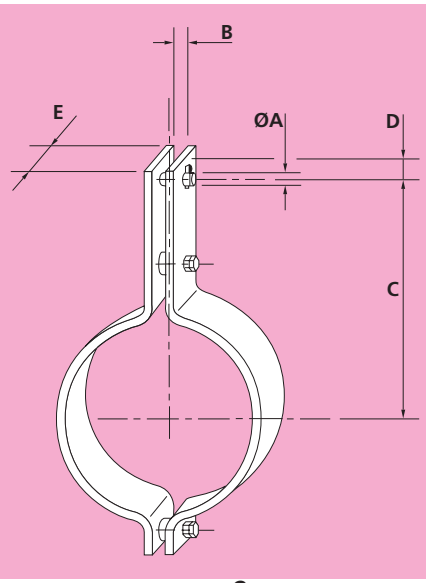

Material: Carbon Steel to 400°C Alloy Steel above 400°C

Part Number	Pipe O/D		A	B	C		D	E	Weight	Load Capacity (kgf) at Temperature C							Compatible with Rod Sizes
	mm	in	mm	mm	mm	in	mm	mm	kgf	350	400	490	530	560	580	600	
PC3-750-4-400	762	30	24	25	640	25 3/16	36	65	32.4	1780	1690						M12–M36
PC3-750-5-400	762	30	30	29	640	25 3/16	45	110	55.6	2870	2730						M12–M36
PC3-750-6-400	762	30	36	41	640	25 3/16	54	110	69.7	3810	3810						M20–M64
PC3-750-7-400	762	30	42	45	640	25 3/16	63	150	96.7	5470	5470						M30–M64
PC3-750-8-400	762	30	48	52	640	25 3/16	72	150	118.5	8160	7940						M42–M80
PC3-750-9-400	762	30	56	58	680	26 3/4	84	150	165.7	10000	10000						M42–M80
PC3-750-10-400	762	30	64	65	710	27 15/16	96	180	207.1	15770	15630						M42–M80
PC3-750-11-400	762	30	72	69	720	28 3/8	108	220	255.3	19030	19030						M42–M80
PC3-750-12-400	762	30	80	77	750	29 1/2	120	200	303.4	26550	26430						M72–M80
PC3-750-13-400	762	30	80	85	750	29 1/2	120	220	331.8	28280	28280						M72–M80
PC3-750-4-490	762	30	24	25	660	26	36	100	49.6	1830	1830	1830	1830	1610	1120	810	M12–M36
PC3-750-5-490	762	30	30	29	660	26	45	100	50.0	2370	2370	2370	2340	1620	1120	820	M12–M36
PC3-750-6-490	762	30	36	41	660	26	54	90	57.2	3810	3810	3790	3210	2320	1670	1190	M20–M64
PC3-750-7-490	762	30	42	45	660	26	63	110	85.4	5470	5470	5470	5470	4150	3070	2160	M30–M64
PC3-750-8-490	762	30	48	52	660	26	72	140	110.5	8160	8160	7860	6740	5110	3780	2660	M42–M80
PC3-750-9-490	762	30	56	58	660	26	84	140	148.5	10000	10000	10000	10000	10000	7850	5530	M42–M80
PC3-750-10-490	762	30	64	65	690	27 3/16	96	160	176.6	15800	15800	15490	13790	11300	8730	6150	M42–M80
PC3-750-11-490	762	30	72	69	700	27 9/16	108	200	226.0	19200	19200	18830	16760	13740	10610	7480	M42–M80
PC3-750-12-490	762	30	80	77	750	29 1/2	120	200	298.2	28010	28010	27940	25480	22170	17970	13400	M72–M80
PC3-750-13-490	762	30	80	85	740	29 1/8	120	200	295.6	28930	28930	28850	26310	22890	18560	13840	M72–M80
PC3-750-4-530	762	30	24	25	660	26	36	100	49.6	1830	1830	1830	1830	1610	1120	810	M12–M36
PC3-750-5-530	762	30	30	29	660	26	45	100	50.0	2370	2370	2370	2340	1620	1120	820	M12–M36
PC3-750-6-530	762	30	36	41	660	26	54	110	69.6	3810	3810	3810	3810	2840	2040	1460	M20–M64
PC3-750-7-530	762	30	42	45	660	26	63	110	85.4	5470	5470	5470	5470	4150	3070	2160	M30–M64
PC3-750-8-530	762	30	48	52	660	26	72	160	125.7	9320	9320	8980	7700	5840	4320	3040	M42–M80
PC3-750-9-530	762	30	56	58	660	26	84	140	148.5	10000	10000	10000	10000	10000	7850	5530	M42–M80
PC3-750-10-530	762	30	64	65	690	27 3/16	96	160	176.6	15800	15800	15490	13790	11300	8730	6150	M42–M80
PC3-750-11-530	762	30	72	69	700	27 9/16	108	220	247.6	21120	21120	20710	18440	15110	11670	8220	M42–M80
PC3-750-12-530	762	30	80	77	750	29 1/2	120	200	298.2	28010	28010	27940	25480	22170	17970	13400	M72–M80
PC3-750-13-530	762	30	80	85	740	29 1/8	120	220	323.6	30830	30830	30830	28940	25180	20410	15220	M72–M80
PC3-750-4-560	762	30	24	25	690	27 3/16	36	100	50.5	1830	1830	1830	1830	1780	1400	1120	M12–M36
PC3-750-5-560	762	30	30	29	690	27 3/16	45	90	57.3	2530	2530	2530	2530	2530	2090	1670	M12–M36
PC3-750-6-560	762	30	36	41	690	27 3/16	54	100	77.4	3810	3810	3810	3810	3810	3380	2680	M20–M64
PC3-750-7-560	762	30	42	45	690	27 3/16	63	140	110.0	5470	5470	5470	5470	5470	4540	3600	M30–M64
PC3-750-8-560	762	30	48	52	690	27 3/16	72	120	128.6	10910	10910	10910	10690	8920	7340	5830	M42–M80
PC3-750-9-560	762	30	56	58	690	27 3/16	84	140	151.2	10000	10000	10000	10000	10000	8610	6840	M42–M80
PC3-750-10-560	762	30	64	65	690	27 3/16	96	190	208.4	16320	16320	16320	16320	13820	11370	9030	M42–M80
PC3-750-11-560	762	30	72	69	720	28 3/8	108	180	257.2	23740	23740	23740	23740	21120	17850	14490	M42–M80
PC3-750-12-560	762	30	80	77	730	28 3/4	120	200	289.6	24140	24140	24140	24140	23630	19970	16210	M72–M80
PC3-750-13-560	762	30	80	85	740	29 1/8	120	250	365.7	30830	30830	30830	30830	28960	24480	19870	M72–M80
PC3-750-4-600	762	30	24	25	690	27 3/16	36	90	56.5	1610	1610	1610	1610	1610	1610	1610	M12–M36
PC3-750-5-600	762	30	30	29	690	27 3/16	45	100	76.3	2690	2690	2690	2690	2690	2690	2690	M12–M36
PC3-750-6-600	762	30	36	41	690	27 3/16	54	140	107.8	3810	3810	3810	3810	3810	3810	3760	M20–M64
PC3-750-7-600	762	30	42	45	690	27 3/16	63	120	125.9	5470	5470	5470	5470	5470	5470	5470	M30–M64
PC3-750-8-600	762	30	48	52	690	27 3/16	72	150	157.9	7580	7580	7580	7580	7580	7580	7560	M42–M80
PC3-750-9-600	762	30	56	58	690	27 3/16	84	200	214.0	10000	10000	10000	10000	10000	10000	9770	M42–M80
PC3-750-10-600	762	30	64	65	710	27 15/16	96	180	249.7	17590	17590	17590	17590	17590	17590	14850	M42–M80
PC3-750-11-600	762	30	72	69	720	28 3/8	108	230	326.0	23740	23740	23740	23740	23740	22810	18510	M42–M80
PC3-750-12-600	762	30	80	77	730	28 3/4	120	290	414.5	24140	24140	24140	24140	24140	24140	23500	M72–M80

PC3 PIPE CLAMP THREE BOLT TYPE

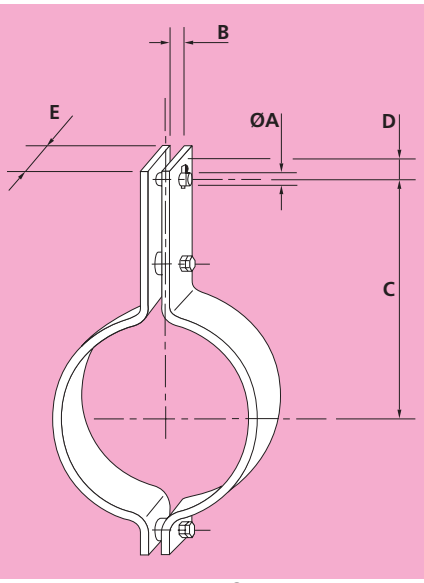

Material: Carbon Steel to 400°C Alloy Steel above 400°C

Part Number	Pipe O/D		A	B	C		D	E	Weight	Load Capacity (kgf) at Temperature C							Compatible with Rod Sizes
	mm	in	mm	mm	mm	in	mm	mm	kgf	350	400	490	530	560	580	600	
PC3-800-4-400	812.8	32	24	25	660	26	36	65	33.9	1730	1650						M12–M36
PC3-800-5-400	812.8	32	30	29	660	26	45	110	58.2	2790	2660						M12–M36
PC3-800-6-400	812.8	32	36	41	660	26	54	110	72.9	3650	3650						M20–M64
PC3-800-7-400	812.8	32	42	45	660	26	63	150	101.1	5470	5470						M30–M64
PC3-800-8-400	812.8	32	48	52	660	26	72	150	124.1	7610	7420						M42–M80
PC3-800-9-400	812.8	32	56	58	710	27 15/16	84	150	173.7	10000	10000						M42–M80
PC3-800-10-400	812.8	32	64	65	740	29 1/8	96	180	216.5	15200	15070						M42–M80
PC3-800-11-400	812.8	32	72	69	740	29 1/8	108	220	265.4	18120	18120						M42–M80
PC3-800-12-400	812.8	32	80	77	780	30 11/16	120	200	317.3	24970	24870						M72–M80
PC3-800-13-400	812.8	32	80	85	790	31 1/8	120	240	385.3	29520	29400						M72–M80
PC3-800-4-490	812.8	32	24	25	690	27 3/16	36	100	52.2	1830	1830	1830	1830	1600	1120	810	M12–M36
PC3-800-5-490	812.8	32	30	29	690	27 3/16	45	100	53.1	2760	2760	2580	2160	1510	1060	770	M12–M36
PC3-800-6-490	812.8	32	36	41	690	27 3/16	54	90	60.1	3710	3710	3700	3140	2300	1670	1180	M20–M64
PC3-800-7-490	812.8	32	42	45	690	27 3/16	63	110	89.7	5470	5470	5470	5350	4100	3050	2140	M30–M64
PC3-800-8-490	812.8	32	48	52	690	27 3/16	72	150	124.4	8130	8130	7850	6760	5180	3850	2710	M42–M80
PC3-800-9-490	812.8	32	56	58	690	27 3/16	84	140	156.4	10000	10000	10000	10000	9640	7470	5310	M42–M80
PC3-800-10-490	812.8	32	64	65	720	28 3/8	96	160	185.4	14780	14780	14520	12980	10730	8320	5910	M42–M80
PC3-800-11-490	812.8	32	72	69	730	28 3/4	108	210	248.4	18880	18880	18550	16580	13710	10630	7550	M42–M80
PC3-800-12-490	812.8	32	80	77	770	30 5/16	120	200	309.7	26990	26990	26980	24660	21510	17600	13200	M72–M80
PC3-800-13-490	812.8	32	80	85	770	30 5/16	120	210	324.1	28530	28530	28520	26070	22740	18610	13960	M72–M80
PC3-800-4-530	812.8	32	24	25	690	27 3/16	36	100	52.2	1830	1830	1830	1830	1600	1120	810	M12–M36
PC3-800-5-530	812.8	32	30	29	690	27 3/16	45	110	58.4	3030	3030	2840	2380	1660	1170	840	M12–M36
PC3-800-6-530	812.8	32	36	41	690	27 3/16	54	110	73.2	3710	3710	3710	3710	2810	2040	1450	M20–M64
PC3-800-7-530	812.8	32	42	45	690	27 3/16	63	110	89.7	5470	5470	5470	5350	4100	3050	2140	M30–M64
PC3-800-8-530	812.8	32	48	52	690	27 3/16	72	120	133.0	10910	10910	10910	9940	8210	6370	4520	M42–M80
PC3-800-9-530	812.8	32	56	58	690	27 3/16	84	140	156.4	10000	10000	10000	10000	9640	7470	5310	M42–M80
PC3-800-10-530	812.8	32	64	65	720	28 3/8	96	170	196.6	15700	15700	15430	13790	11400	8840	6280	M42–M80
PC3-800-11-530	812.8	32	72	69	750	29 1/2	108	180	269.7	23030	23030	23030	22620	19730	16150	12110	M42–M80
PC3-800-12-530	812.8	32	80	77	770	30 5/16	120	200	309.7	26990	26990	26980	24660	21510	17600	13200	M72–M80
PC3-800-13-530	812.8	32	80	85	770	30 5/16	120	230	353.6	30830	30830	30830	28550	24900	20380	15290	M72–M80
PC3-800-4-560	812.8	32	24	25	710	27 15/16	36	100	52.8	1830	1830	1830	1830	1750	1390	1110	M12–M36
PC3-800-5-560	812.8	32	30	29	710	27 15/16	45	90	60.1	2510	2510	2510	2510	2440	1960	1560	M12–M36
PC3-800-6-560	812.8	32	36	41	710	27 15/16	54	100	80.9	3810	3810	3810	3810	3810	3330	2640	M20–M64
PC3-800-7-560	812.8	32	42	45	710	27 15/16	63	140	114.8	5470	5470	5470	5470	5470	4470	3540	M30–M64
PC3-800-8-560	812.8	32	48	52	710	27 15/16	72	120	134.5	10910	10910	10910	10050	8430	6940	5540	M42–M80
PC3-800-9-560	812.8	32	56	58	710	27 15/16	84	140	158.1	10000	10000	10000	10000	9890	8150	6500	M42–M80
PC3-800-10-560	812.8	32	64	65	720	28 3/8	96	200	230.0	15890	15890	15890	15890	13770	11340	9040	M42–M80
PC3-800-11-560	812.8	32	72	69	750	29 1/2	108	180	269.7	23030	23030	23030	22770	19970	16980	13810	M42–M80
PC3-800-12-560	812.8	32	80	77	770	30 5/16	120	220	339.3	29690	29690	29670	27300	23950	20360	16550	M72–M80
PC3-800-13-560	812.8	32	80	85	770	30 5/16	120	260	397.8	30830	30830	30830	30830	28490	24220	19700	M72–M80
PC3-800-4-600	812.8	32	24	25	710	27 15/16	36	100	66.2	1830	1830	1830	1830	1830	1830	1720	M12–M36
PC3-800-5-600	812.8	32	30	29	710	27 15/16	45	100	80.0	2650	2650	2650	2650	2650	2650	2610	M12–M36
PC3-800-6-600	812.8	32	36	41	710	27 15/16	54	140	112.7	3810	3810	3810	3810	3810	3810	3700	M20–M64
PC3-800-7-600	812.8	32	42	45	710	27 15/16	63	120	131.9	5470	5470	5470	5470	5470	5470	5470	M30–M64
PC3-800-8-600	812.8	32	48	52	710	27 15/16	72	160	176.1	7410	7410	7410	7410	7410	7410	7410	M42–M80
PC3-800-9-600	812.8	32	56	58	710	27 15/16	84	210	234.9	10000	10000	10000	10000	10000	10000	9750	M42–M80
PC3-800-10-600	812.8	32	64	65	740	29 1/8	96	180	262.0	17090	17090	17090	17090	17090	17090	14140	M42–M80
PC3-800-11-600	812.8	32	72	69	750	29 1/2	108	240	356.3	23030	23030	23030	23030	23030	22640	18410	M42–M80
PC3-800-12-600	812.8	32	80	77	770	30 5/16	120	310	472.2	32900	32900	32900	32900	32900	28680	23330	M72–M80

PC3 PIPE CLAMP THREE BOLT TYPE

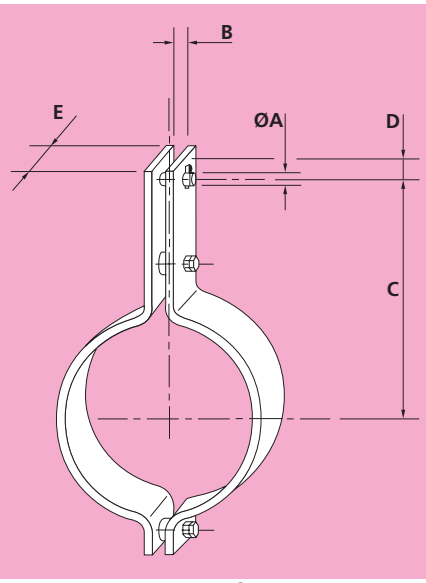

Material: Carbon Steel to 400°C Alloy Steel above 400°C

Part Number	Pipe O/D		A	B	C		D	E	Weight	Load Capacity (kgf) at Temperature C							Compatible with Rod Sizes
	mm	in	mm	mm	mm	in	mm	mm	kgf	350	400	490	530	560	580	600	
PC3-850-4-400	863.6	34	24	25	710	27 15/16	36	65	36.0	1670	1590						M12–M36
PC3-850-5-400	863.6	34	30	29	710	27 15/16	45	110	61.7	2690	2560						M12–M36
PC3-850-6-400	863.6	34	36	41	710	27 15/16	54	110	78.8	3810	3720						M20–M64
PC3-850-7-400	863.6	34	42	45	710	27 15/16	63	150	128.6	5470	5470						M30–M64
PC3-850-8-400	863.6	34	48	52	710	27 15/16	72	150	174.4	8920	8920						M42–M80
PC3-850-9-400	863.6	34	56	58	730	28 3/4	84	150	180.4	10000	10000						M42–M80
PC3-850-10-400	863.6	34	64	65	770	30 5/16	96	180	226.4	14240	14120						M42–M80
PC3-850-11-400	863.6	34	72	69	800	31 1/2	108	200	324.9	23870	23760						M42–M80
PC3-850-12-400	863.6	34	80	77	810	31 7/8	120	200	330.0	24030	23930						M72–M80
PC3-850-13-400	863.6	34	80	85	820	32 5/16	120	240	400.6	28390	28270						M72–M80
PC3-850-4-490	863.6	34	24	25	740	29 1/8	36	100	55.5	1830	1830	1830	1830	1520	1060	770	M12–M36
PC3-850-5-490	863.6	34	30	29	740	29 1/8	45	100	56.4	2660	2660	2480	2080	1440	1000	730	M12–M36
PC3-850-6-490	863.6	34	36	41	740	29 1/8	54	100	71.7	3810	3810	3760	3180	2310	1670	1190	M20–M64
PC3-850-7-490	863.6	34	42	45	740	29 1/8	63	110	95.3	5470	5470	5470	4920	3740	2770	1950	M30–M64
PC3-850-8-490	863.6	34	48	52	740	29 1/8	72	150	131.6	7840	7840	7560	6490	4940	3660	2580	M42–M80
PC3-850-9-490	863.6	34	56	58	740	29 1/8	84	140	165.3	10000	10000	10000	10000	9200	7110	5030	M42–M80
PC3-850-10-490	863.6	34	64	65	740	29 1/8	96	160	192.7	14240	14240	13970	12450	10240	7920	5590	M42–M80
PC3-850-11-490	863.6	34	72	69	760	29 15/16	108	220	271.1	19050	19050	18690	16660	13700	10590	7480	M42–M80
PC3-850-12-490	863.6	34	80	77	800	31 1/2	120	200	322.4	25990	25990	25940	23680	20610	16770	12530	M72–M80
PC3-850-13-490	863.6	34	80	85	800	31 1/2	120	220	352.8	28770	28770	28720	26210	22820	18560	13870	M72–M80
PC3-850-4-530	863.6	34	24	25	740	29 1/8	36	100	55.5	1830	1830	1830	1830	1520	1060	770	M12–M36
PC3-850-5-530	863.6	34	30	29	740	29 1/8	45	110	61.9	2930	2930	2730	2290	1580	1110	800	M12–M36
PC3-850-6-530	863.6	34	36	41	740	29 1/8	54	120	85.7	3810	3810	3810	3810	2780	2000	1430	M20–M64
PC3-850-7-530	863.6	34	42	45	740	29 1/8	63	120	103.7	5470	5470	5470	5360	4080	3020	2130	M30–M64
PC3-850-8-530	863.6	34	48	52	740	29 1/8	72	120	140.7	10630	10630	10630	9540	7840	6060	4280	M42–M80
PC3-850-9-530	863.6	34	56	58	740	29 1/8	84	140	165.3	10000	10000	10000	10000	9200	7110	5030	M42–M80
PC3-850-10-530	863.6	34	64	65	740	29 1/8	96	180	215.9	15280	15280	15280	14010	11520	8900	6290	M42–M80
PC3-850-11-530	863.6	34	72	69	780	30 11/16	108	180	281.1	22120	22120	22120	21730	18920	15390	11500	M42–M80
PC3-850-12-530	863.6	34	80	77	800	31 1/2	120	200	322.4	25990	25990	25940	23680	20610	16770	12530	M72–M80
PC3-850-13-530	863.6	34	80	85	800	31 1/2	120	240	383.6	30830	30830	30830	28600	24900	20250	15130	M72–M80
PC3-850-4-560	863.6	34	24	25	760	29 15/16	36	100	56.1	1830	1830	1830	1830	1680	1330	1060	M12–M36
PC3-850-5-560	863.6	34	30	29	760	29 15/16	45	90	63.7	2420	2420	2420	2420	2330	1870	1490	M12–M36
PC3-850-6-560	863.6	34	36	41	760	29 15/16	54	100	85.7	3790	3790	3790	3790	3790	3180	2520	M20–M64
PC3-850-7-560	863.6	34	42	45	760	29 15/16	63	150	130.5	5470	5470	5470	5470	5410	4380	3470	M30–M64
PC3-850-8-560	863.6	34	48	52	760	29 15/16	72	120	142.3	10630	10630	10630	9640	8070	6640	5280	M42–M80
PC3-850-9-560	863.6	34	56	58	760	29 15/16	84	150	178.7	10000	10000	10000	10000	10000	8340	6640	M42–M80
PC3-850-10-560	863.6	34	64	65	760	29 15/16	96	210	253.3	15280	15280	15280	15280	13820	11370	9050	M42–M80
PC3-850-11-560	863.6	34	72	69	780	30 11/16	108	180	281.1	22120	22120	22120	21880	19150	16220	13170	M42–M80
PC3-850-12-560	863.6	34	80	77	800	31 1/2	120	230	368.7	29890	29890	29830	27420	24000	20320	16500	M72–M80
PC3-850-13-560	863.6	34	80	85	800	31 1/2	120	270	429.7	30830	30830	30830	30830	28350	24010	19500	M72–M80
PC3-850-4-600	863.6	34	24	25	760	29 15/16	36	100	70.3	1830	1830	1830	1830	1830	1830	1640	M12–M36
PC3-850-5-600	863.6	34	30	29	760	29 15/16	45	100	84.8	2560	2560	2560	2560	2560	2560	2490	M12–M36
PC3-850-6-600	863.6	34	36	41	760	29 15/16	54	150	127.9	3790	3790	3790	3790	3790	3790	3790	M20–M64
PC3-850-7-600	863.6	34	42	45	760	29 15/16	63	120	139.6	5470	5470	5470	5470	5470	5470	5440	M30–M64
PC3-850-8-600	863.6	34	48	52	760	29 15/16	72	170	200.1	10630	10630	10630	10630	10630	9400	7480	M42–M80
PC3-850-9-600	863.6	34	56	58	760	29 15/16	84	220	260.0	10000	10000	10000	10000	10000	10000	9740	M42–M80
PC3-850-10-600	863.6	34	64	65	760	29 15/16	96	180	272.2	16420	16420	16420	16420	16420	16420	13500	M42–M80
PC3-850-11-600	863.6	34	72	69	780	30 11/16	108	250	386.7	22120	22120	22120	22120	22120	22120	18300	M42–M80
PC3-850-12-600	863.6	34	80	77	800	31 1/2	120	330	522.8	31580	31580	31580	31580	31580	29150	23680	M72–M80

PC3 PIPE CLAMP THREE BOLT TYPE

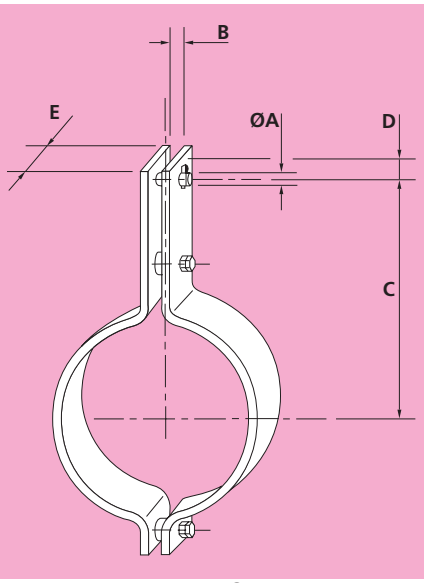

Material: Carbon Steel to 400°C Alloy Steel above 400°C

Part Number	Pipe O/D		A	B	C		D	E	Weight	Load Capacity (kgf) at Temperature C							Compatible with Rod Sizes
	mm	in	mm	mm	mm	in	mm	mm	kgf	350	400	490	530	560	580	600	
PC3-900-4-400	914.4	36	24	25	740	29 1/8	36	90	52.0	1830	1830						M12–M36
PC3-900-5-400	914.4	36	30	29	740	29 1/8	45	110	64.8	2490	2380						M12–M36
PC3-900-6-400	914.4	36	36	41	740	29 1/8	54	130	97.0	3810	3810						M20–M64
PC3-900-7-400	914.4	36	42	45	740	29 1/8	63	150	136.3	5470	5470						M30–M64
PC3-900-8-400	914.4	36	48	52	740	29 1/8	72	150	182.2	8560	8560						M42–M80
PC3-900-9-400	914.4	36	56	58	760	29 15/16	84	150	188.3	10000	10000						M42–M80
PC3-900-10-400	914.4	36	64	65	790	31 1/8	96	180	234.7	13800	13690						M42–M80
PC3-900-11-400	914.4	36	72	69	830	32 11/16	108	200	338.8	22580	22490						M42–M80
PC3-900-12-400	914.4	36	80	77	830	32 11/16	120	200	341.5	23260	23170						M72–M80
PC3-900-13-400	914.4	36	80	85	850	33 7/16	120	260	450.2	29100	28990						M72–M80
PC3-900-4-490	914.4	36	24	25	760	29 15/16	36	100	58.0	1830	1830	1830	1830	1430	1000	720	M12–M36
PC3-900-5-490	914.4	36	30	29	760	29 15/16	45	100	58.7	2600	2600	2440	2050	1430	1010	730	M12–M36
PC3-900-6-490	914.4	36	36	41	760	29 15/16	54	110	82.1	3810	3810	3810	3280	2410	1750	1240	M20–M64
PC3-900-7-490	914.4	36	42	45	760	29 15/16	63	110	99.1	5470	5470	5470	4820	3700	2760	1940	M30–M64
PC3-900-8-490	914.4	36	48	52	760	29 15/16	72	160	145.7	8130	8130	7860	6780	5210	3880	2730	M42–M80
PC3-900-9-490	914.4	36	56	58	760	29 15/16	84	140	173.8	10000	10000	10000	10000	8770	6810	4850	M42–M80
PC3-900-10-490	914.4	36	64	65	770	30 5/16	96	160	201.1	13820	13820	13590	12170	10090	7830	5580	M42–M80
PC3-900-11-490	914.4	36	72	69	780	30 11/16	108	220	281.3	18480	18480	18170	16260	13480	10470	7460	M42–M80
PC3-900-12-490	914.4	36	80	77	830	32 11/16	120	200	336.3	24550	24550	24550	22460	19610	16100	12100	M72–M80
PC3-900-13-490	914.4	36	80	85	820	32 5/16	120	230	381.4	29140	29140	29140	26670	23280	19110	14360	M72–M80
PC3-900-4-530	914.4	36	24	25	760	29 15/16	36	100	58.0	1830	1830	1830	1830	1430	1000	720	M12–M36
PC3-900-5-530	914.4	36	30	29	760	29 15/16	45	90	66.2	3050	3050	3050	2770	2040	1480	1050	M12–M36
PC3-900-6-530	914.4	36	36	41	760	29 15/16	54	100	89.5	3810	3810	3810	3810	3350	2500	1750	M20–M64
PC3-900-7-530	914.4	36	42	45	760	29 15/16	63	130	116.7	5470	5470	5470	5470	4380	3260	2290	M30–M64
PC3-900-8-530	914.4	36	48	52	760	29 15/16	72	120	146.3	10190	10190	10190	9330	7730	6010	4280	M42–M80
PC3-900-9-530	914.4	36	56	58	760	29 15/16	84	140	171.8	10000	10000	10000	10000	9070	7040	5020	M42–M80
PC3-900-10-530	914.4	36	64	65	770	30 5/16	96	180	225.4	14640	14640	14640	13690	11350	8810	6270	M42–M80
PC3-900-11-530	914.4	36	72	69	800	31 1/2	108	180	291.5	21200	21200	21200	21170	18480	15170	11400	M42–M80
PC3-900-12-530	914.4	36	80	77	830	32 11/16	120	210	352.4	25780	25780	25780	23590	20590	16900	12700	M72–M80
PC3-900-13-530	914.4	36	80	85	820	32 5/16	120	250	413.3	30680	30680	30680	28980	25300	20770	15610	M72–M80
PC3-900-4-560	914.4	36	24	25	790	31 1/8	36	110	64.8	1830	1830	1830	1830	1720	1370	1090	M12–M36
PC3-900-5-560	914.4	36	30	29	790	31 1/8	45	90	66.7	2320	2320	2320	2320	2310	1850	1480	M12–M36
PC3-900-6-560	914.4	36	36	41	790	31 1/8	54	100	89.9	3740	3740	3740	3740	3700	3000	2380	M20–M64
PC3-900-7-560	914.4	36	42	45	790	31 1/8	63	160	145.4	5470	5470	5470	5470	5470	4610	3660	M30–M64
PC3-900-8-560	914.4	36	48	52	790	31 1/8	72	120	148.5	10190	10190	10190	9430	7930	6540	5220	M42–M80
PC3-900-9-560	914.4	36	56	58	790	31 1/8	84	150	186.5	10000	10000	10000	10000	9970	8210	6560	M42–M80
PC3-900-10-560	914.4	36	64	65	790	31 1/8	96	210	264.4	14640	14640	14640	14640	13580	11190	8930	M42–M80
PC3-900-11-560	914.4	36	72	69	800	31 1/2	108	180	291.5	21200	21200	21200	21200	18700	15930	12960	M42–M80
PC3-900-12-560	914.4	36	80	77	830	32 11/16	120	240	400.7	29460	29460	29460	27130	23820	20280	16510	M72–M80
PC3-900-13-560	914.4	36	80	85	820	32 5/16	120	280	461.1	30680	30680	30680	30680	28680	24430	19880	M72–M80
PC3-900-4-600	914.4	36	24	25	790	31 1/8	36	100	73.6	1830	1830	1830	1830	1830	1830	1630	M12–M36
PC3-900-5-600	914.4	36	30	29	790	31 1/8	45	100	88.8	2460	2460	2460	2460	2460	2460	2460	M12–M36
PC3-900-6-600	914.4	36	36	41	790	31 1/8	54	160	143.0	3740	3740	3740	3740	3740	3740	3740	M20–M64
PC3-900-7-600	914.4	36	42	45	790	31 1/8	63	120	145.9	5470	5470	5470	5470	5470	5470	5380	M30–M64
PC3-900-8-600	914.4	36	48	52	790	31 1/8	72	180	221.0	10190	10190	10190	10190	10190	9800	7830	M42–M80
PC3-900-9-600	914.4	36	56	58	790	31 1/8	84	180	278.8	10000	10000	10000	10000	10000	10000	10000	M42–M80
PC3-900-10-600	914.4	36	64	65	790	31 1/8	96	190	299.3	15740	15740	15740	15740	15740	15740	14030	M42–M80
PC3-900-11-600	914.4	36	72	69	800	31 1/2	108	250	401.0	21200	21200	21200	21200	21200	21200	18000	M42–M80
PC3-900-12-600	914.4	36	80	77	830	32 11/16	120	340	561.7	30780	30780	30780	30780	30780	28730	23380	M72–M80

PC3 PIPE CLAMP THREE BOLT TYPE

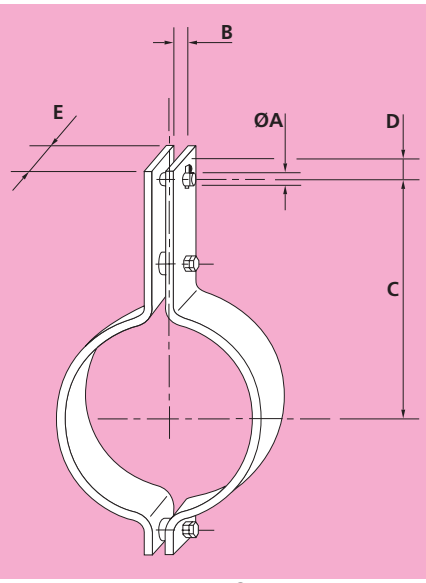

Material: Carbon Steel to 400°C Alloy Steel above 400°C

Part Number	Pipe O/D		A	B	C		D	E	Weight	Load Capacity (kgf) at Temperature C							Compatible with Rod Sizes
	mm	in	mm	mm	mm	in	mm	mm	kgf	350	400	490	530	560	580	600	
PC3-950-4-400	965.2	38	24	25	770	30 5/16	36	90	54.5	1830	1830						M12–M36
PC3-950-5-400	965.2	38	30	29	770	30 5/16	45	110	67.8	2440	2340						M12–M36
PC3-950-6-400	965.2	38	36	41	770	30 5/16	54	130	101.3	3810	3810						M20–M64
PC3-950-7-400	965.2	38	42	45	770	30 5/16	63	150	142.6	5470	5470						M30–M64
PC3-950-8-400	965.2	38	48	52	770	30 5/16	72	150	190.6	8410	8410						M42–M80
PC3-950-9-400	965.2	38	56	58	790	31 1/8	84	150	196.7	10000	10000						M42–M80
PC3-950-10-400	965.2	38	64	65	820	32 5/16	96	200	270.1	14900	14780						M42–M80
PC3-950-11-400	965.2	38	72	69	850	33 7/16	108	200	350.3	21900	21830						M42–M80
PC3-950-12-400	965.2	38	80	77	860	33 7/8	120	220	389.2	24170	24170						M72–M80
PC3-950-13-400	965.2	38	80	85	870	34 1/4	120	280	499.3	30380	30280						M72–M80
PC3-950-4-490	965.2	38	24	25	790	31 1/8	36	100	60.6	1830	1830	1830	1830	1430	1020	730	M12–M36
PC3-950-5-490	965.2	38	30	29	790	31 1/8	45	110	67.6	2650	2650	2490	2100	1490	1060	760	M12–M36
PC3-950-6-490	965.2	38	36	41	790	31 1/8	54	110	85.7	3810	3810	3790	3220	2400	1760	1240	M20–M64
PC3-950-7-490	965.2	38	42	45	790	31 1/8	63	110	103.5	5470	5470	5470	4740	3680	2760	1930	M30–M64
PC3-950-8-490	965.2	38	48	52	790	31 1/8	72	160	152.1	7930	7930	7680	6660	5180	3880	2720	M42–M80
PC3-950-9-490	965.2	38	56	58	790	31 1/8	84	140	181.7	10000	10000	10000	10000	8400	6560	4710	M42–M80
PC3-950-10-490	965.2	38	64	65	790	31 1/8	96	170	221.0	14070	14070	14070	12660	10610	8270	5940	M42–M80
PC3-950-11-490	965.2	38	72	69	830	32 11/16	108	180	303.9	20740	20740	20740	20120	17620	14620	11050	M42–M80
PC3-950-12-490	965.2	38	80	77	850	33 7/16	120	200	347.7	23830	23830	23830	21920	19190	15930	12040	M72–M80
PC3-950-13-490	965.2	38	80	85	850	33 7/16	120	240	414.0	28770	28770	28770	26470	23170	19230	14540	M72–M80
PC3-950-4-530	965.2	38	24	25	790	31 1/8	36	100	60.6	1830	1830	1830	1830	1430	1020	730	M12–M36
PC3-950-5-530	965.2	38	30	29	790	31 1/8	45	90	69.2	3050	3050	3050	2730	2030	1490	1050	M12–M36
PC3-950-6-530	965.2	38	36	41	790	31 1/8	54	100	93.5	3810	3810	3810	3810	3340	2500	1750	M20–M64
PC3-950-7-530	965.2	38	42	45	790	31 1/8	63	130	121.9	5470	5470	5470	5470	4350	3270	2290	M30–M64
PC3-950-8-530	965.2	38	48	52	790	31 1/8	72	120	153.0	9970	9970	9830	8830	7400	5780	4150	M42–M80
PC3-950-9-530	965.2	38	56	58	790	31 1/8	84	140	179.2	9910	9910	9910	9910	8990	7010	5040	M42–M80
PC3-950-10-530	965.2	38	64	65	790	31 1/8	96	180	233.6	14070	14070	14070	13400	11230	8760	6290	M42–M80
PC3-950-11-530	965.2	38	72	69	830	32 11/16	108	180	303.9	20740	20740	20740	20120	17620	14620	11050	M42–M80
PC3-950-12-530	965.2	38	80	77	850	33 7/16	120	220	381.1	26210	26210	26210	24110	21110	17520	13240	M72–M80
PC3-950-13-530	965.2	38	80	85	850	33 7/16	120	260	447.2	29960	29960	29960	28670	25100	20830	15750	M72–M80
PC3-950-4-560	965.2	38	24	25	820	32 5/16	36	110	67.7	1830	1830	1830	1830	1710	1370	1090	M12–M36
PC3-950-5-560	965.2	38	30	29	820	32 5/16	45	100	78.0	3050	3050	3050	3050	2420	1950	1550	M12–M36
PC3-950-6-560	965.2	38	36	41	820	32 5/16	54	110	104.2	3810	3810	3810	3810	3810	3140	2480	M20–M64
PC3-950-7-560	965.2	38	42	45	820	32 5/16	63	160	151.8	5470	5470	5470	5470	5470	4580	3630	M30–M64
PC3-950-8-560	965.2	38	48	52	820	32 5/16	72	120	155.2	9970	9970	9830	8930	7560	6250	5010	M42–M80
PC3-950-9-560	965.2	38	56	58	820	32 5/16	84	150	194.5	9910	9910	9910	9910	9840	8130	6510	M42–M80
PC3-950-10-560	965.2	38	64	65	820	32 5/16	96	210	275.4	14070	14070	14070	14070	13390	11060	8860	M42–M80
PC3-950-11-560	965.2	38	72	69	830	32 11/16	108	190	320.3	20740	20740	20740	20740	18820	16130	13160	M42–M80
PC3-950-12-560	965.2	38	80	77	850	33 7/16	120	240	414.5	28600	28600	28600	26450	23310	19980	16300	M72–M80
PC3-950-13-560	965.2	38	80	85	850	33 7/16	120	290	497.1	29960	29960	29960	29960	28340	24290	19810	M72–M80
PC3-950-4-600	965.2	38	24	25	820	32 5/16	36	100	76.9	1830	1830	1830	1830	1830	1830	1620	M12–M36
PC3-950-5-600	965.2	38	30	29	820	32 5/16	45	100	92.8	2360	2360	2360	2360	2360	2360	2360	M12–M36
PC3-950-6-600	965.2	38	36	41	820	32 5/16	54	120	151.7	3810	3810	3810	3810	3810	3810	3810	M20–M64
PC3-950-7-600	965.2	38	42	45	820	32 5/16	63	130	165.1	5470	5470	5470	5470	5470	5470	5470	M30–M64
PC3-950-8-600	965.2	38	48	52	820	32 5/16	72	180	231.1	10020	10020	10020	10020	10020	9370	7510	M42–M80
PC3-950-9-600	965.2	38	56	58	820	32 5/16	84	180	291.2	10000	10000	10000	10000	10000	10000	10000	M42–M80
PC3-950-10-600	965.2	38	64	65	820	32 5/16	96	190	312.5	15410	15410	15410	15410	15410	15410	13480	M42–M80
PC3-950-11-600	965.2	38	72	69	830	32 11/16	108	260	434.6	20740	20740	20740	20740	20740	20740	18010	M42–M80
PC3-950-12-600	965.2	38	80	77	850	33 7/16	120	340	581.2	29550	29550	29550	29550	29550	28300	23080	M72–M80

PC3 PIPE CLAMP THREE BOLT TYPE

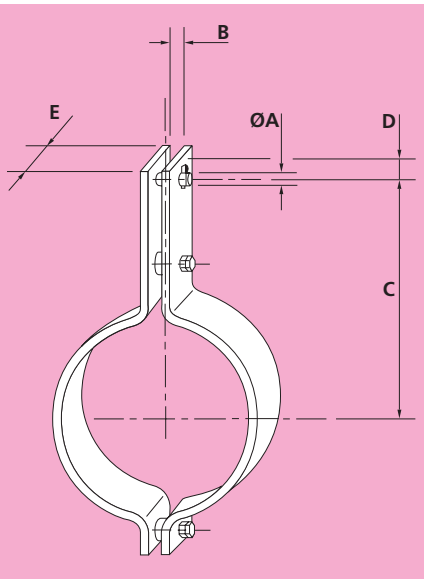

Material: Carbon Steel to 400°C Alloy Steel above 400°C

Part Number	Pipe O/D		A	B	C		D	E	Weight	Load Capacity (kgf) at Temperature C							Compatible with Rod Sizes
	mm	in	mm	mm	mm	in	mm	mm	kgf	350	400	490	530	560	580	600	
PC3-1000-4-400	1016	40	24	25	790	31 1/8	36	90	56.6	1810	1810						M12–M36
PC3-1000-5-400	1016	40	30	29	790	31 1/8	45	110	87.6	3050	3050						M12–M36
PC3-1000-6-400	1016	40	36	41	790	31 1/8	54	130	105.0	3810	3810						M20–M64
PC3-1000-7-400	1016	40	42	45	790	31 1/8	63	150	147.7	5470	5470						M30–M64
PC3-1000-8-400	1016	40	48	52	790	31 1/8	72	150	197.4	8150	8150						M42–M80
PC3-1000-9-400	1016	40	56	58	810	31 7/8	84	150	203.5	10000	10000						M42–M80
PC3-1000-10-400	1016	40	64	65	840	33 1/16	96	200	279.3	14440	14320						M42–M80
PC3-1000-11-400	1016	40	72	69	880	34 5/8	108	200	363.1	21220	21140						M42–M80
PC3-1000-12-400	1016	40	80	77	890	35 1/16	120	220	403.4	23370	23370						M72–M80
PC3-1000-13-400	1016	40	80	85	900	35 7/16	120	280	517.4	29410	29300						M72–M80
PC3-1000-4-490	1016	40	24	25	820	32 5/16	36	100	63.2	1830	1830	1830	1830	1370	960	690	M12–M36
PC3-1000-5-490	1016	40	30	29	820	32 5/16	45	110	70.5	2570	2570	2410	2030	1430	1010	730	M12–M36
PC3-1000-6-490	1016	40	36	41	820	32 5/16	54	110	89.3	3810	3810	3660	3110	2300	1670	1190	M20–M64
PC3-1000-7-490	1016	40	42	45	820	32 5/16	63	120	117.4	5470	5470	5470	4990	3850	2870	2010	M30–M64
PC3-1000-8-490	1016	40	48	52	820	32 5/16	72	160	158.3	7690	7690	7440	6420	4950	3700	2590	M42–M80
PC3-1000-9-490	1016	40	56	58	820	32 5/16	84	140	186.8	9810	9810	9810	9810	8320	6470	4620	M42–M80
PC3-1000-10-490	1016	40	64	65	820	32 5/16	96	180	243.6	13910	13910	13910	12530	10410	8100	5780	M42–M80
PC3-1000-11-490	1016	40	72	69	860	33 7/8	108	180	315.5	20070	20070	20070	19430	16980	13980	10520	M42–M80
PC3-1000-12-490	1016	40	80	77	880	34 5/8	120	200	360.6	23090	23090	23090	21160	18490	15230	11460	M72–M80
PC3-1000-13-490	1016	40	80	85	880	34 5/8	120	250	446.7	28960	28960	28960	26610	23250	19150	14410	M72–M80
PC3-1000-4-530	1016	40	24	25	820	32 5/16	36	100	63.2	1830	1830	1830	1830	1370	960	690	M12–M36
PC3-1000-5-530	1016	40	30	29	820	32 5/16	45	90	72.1	3050	3050	3050	2640	1950	1420	1010	M12–M36
PC3-1000-6-530	1016	40	36	41	820	32 5/16	54	100	97.4	3810	3810	3810	3810	3190	2380	1670	M20–M64
PC3-1000-7-530	1016	40	42	45	820	32 5/16	63	130	127.0	5470	5470	5470	5400	4170	3110	2180	M30–M64
PC3-1000-8-530	1016	40	48	52	820	32 5/16	72	120	159.2	9670	9670	9520	8530	7090	5520	3940	M42–M80
PC3-1000-9-530	1016	40	56	58	820	32 5/16	84	140	186.8	9810	9810	9810	9810	8320	6470	4620	M42–M80
PC3-1000-10-530	1016	40	64	65	820	32 5/16	96	200	269.9	13910	13910	13910	13910	11570	9000	6420	M42–M80
PC3-1000-11-530	1016	40	72	69	860	33 7/8	108	180	315.5	20070	20070	20070	19430	16980	13980	10520	M42–M80
PC3-1000-12-530	1016	40	80	77	880	34 5/8	120	220	395.3	25400	25400	25400	23280	20340	16750	12610	M72–M80
PC3-1000-13-530	1016	40	80	85	880	34 5/8	120	270	481.3	28960	28960	28960	28740	25110	20680	15560	M72–M80
PC3-1000-4-560	1016	40	24	25	840	33 1/16	36	110	70.2	1830	1830	1830	1830	1650	1310	1040	M12–M36
PC3-1000-5-560	1016	40	30	29	840	33 1/16	45	100	80.8	3050	3050	3050	2960	2320	1870	1480	M12–M36
PC3-1000-6-560	1016	40	36	41	840	33 1/16	54	110	108.0	3810	3810	3810	3810	3700	3010	2380	M20–M64
PC3-1000-7-560	1016	40	42	45	840	33 1/16	63	160	157.3	5470	5470	5470	5470	5410	4390	3480	M30–M64
PC3-1000-8-560	1016	40	48	52	840	33 1/16	72	130	173.8	9710	9710	9710	9340	7870	6490	5190	M42–M80
PC3-1000-9-560	1016	40	56	58	840	33 1/16	84	160	214.9	9810	9810	9810	9810	9740	8030	6420	M42–M80
PC3-1000-10-560	1016	40	64	65	840	33 1/16	96	180	306.7	14910	14910	14910	14910	14910	14910	12240	M42–M80
PC3-1000-11-560	1016	40	72	69	860	33 7/8	108	190	332.5	20070	20070	20070	20070	18140	15480	12600	M42–M80
PC3-1000-12-560	1016	40	80	77	880	34 5/8	120	250	447.3	28580	28580	28580	26610	23390	19960	16250	M72–M80
PC3-1000-13-560	1016	40	80	85	880	34 5/8	120	300	533.1	28960	28960	28960	28960	28240	24090	19620	M72–M80
PC3-1000-4-600	1016	40	24	25	840	33 1/16	36	110	87.7	1830	1830	1830	1830	1830	1830	1710	M12–M36
PC3-1000-5-600	1016	40	30	29	840	33 1/16	45	100	96.2	2290	2290	2290	2290	2290	2290	2290	M12–M36
PC3-1000-6-600	1016	40	36	41	840	33 1/16	54	120	157.2	3810	3810	3810	3810	3810	3810	3810	M20–M64
PC3-1000-7-600	1016	40	42	45	840	33 1/16	63	140	184.1	5470	5470	5470	5470	5470	5470	5470	M30–M64
PC3-1000-8-600	1016	40	48	52	840	33 1/16	72	190	252.4	9710	9710	9710	9710	9710	9480	7580	M42–M80
PC3-1000-9-600	1016	40	56	58	840	33 1/16	84	180	301.4	10000	10000	10000	10000	10000	10000	10000	M42–M80
PC3-1000-10-600	1016	40	64	65	840	33 1/16	96	200	340.0	14910	14910	14910	14910	14910	14910	13600	M42–M80
PC3-1000-11-600	1016	40	72	69	860	33 7/8	108	280	485.4	20070	20070	20070	20070	20070	20070	18570	M42–M80

RC4 PRESSED RISER CLAMP FOUR BOLT TYPE

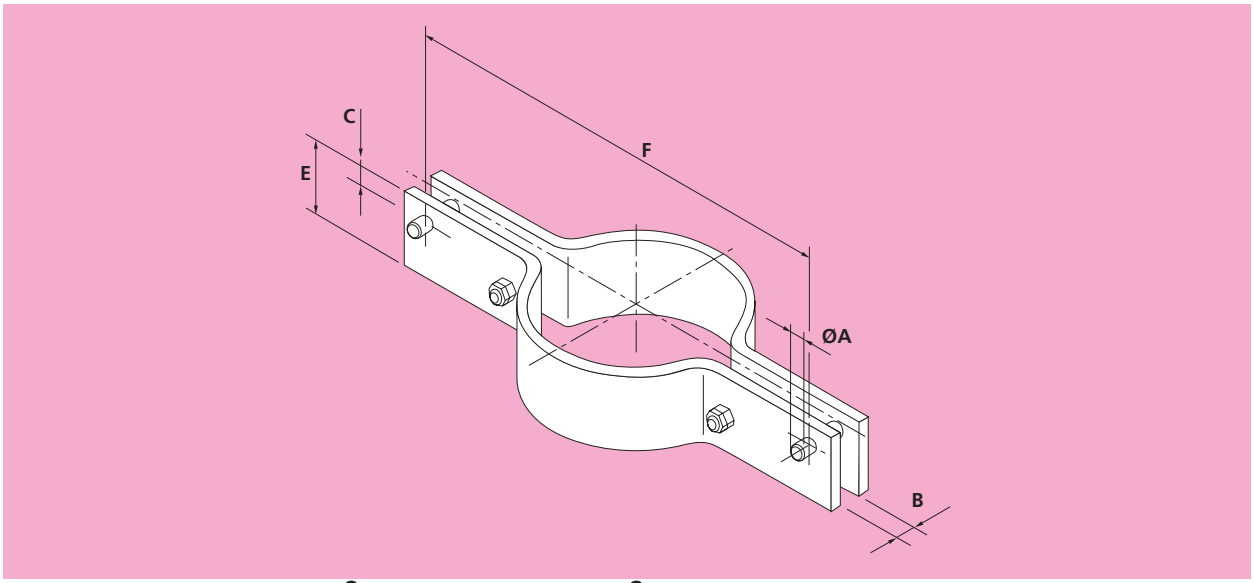

Material: Carbon Steel to 400°C Alloy Steel above 400°C ***Order by Part No. and Rod Centres "F"***

Part Number	Pipe O/D		A	B	C		E		F		Weight kgf		Load Capacity (kgf) at Temperature C							Compatible with Rod Sizes
	mm	in	mm	mm	mm	in	Min.	Max.	Min.	Max.	Min.	Max.	350	400	490	530	560	580	600	
RC4-15-0-400	21.3	0.84	12	15	18	11/16	50	90	200	800	2.0	18.0	510	470						M8–M16
RC4-15-0-490	21.3	0.84	12	15	18	11/16	50	90	200	800	2.0	18.0	520	520	460	340	210	150	120	M8–M16
RC4-15-0-530	21.3	0.84	12	15	18	11/16	70	120	200	800	2.8	24.0	720	720	640	490	300	220	160	M8–M16
RC4-15-0-560	21.3	0.84	12	15	18	11/16	70	90	200	800	3.3	24.0	780	780	780	670	490	390	310	M8–M16
RC4-15-0-600	21.3	0.84	12	15	18	11/16	70	130	200	800	4.1	34.6	780	780	780	780	750	590	470	M8–M16
RC4-20-0-400	26.7	1.05	12	15	18	11/16	50	90	200	800	2.0	18.0	510	470						M8–M16
RC4-20-0-490	26.7	1.05	12	15	18	11/16	50	90	200	800	2.0	18.0	530	530	470	340	210	150	120	M8–M16
RC4-20-0-530	26.7	1.05	12	15	18	11/16	70	120	200	800	2.8	24.0	720	720	640	490	300	220	170	M8–M16
RC4-20-0-560	26.7	1.05	12	15	18	11/16	70	90	200	800	3.3	24.0	780	780	780	670	490	390	310	M8–M16
RC4-20-0-600	26.7	1.05	12	15	18	11/16	70	130	200	800	4.1	34.6	780	780	780	780	750	590	460	M8–M16
RC4-25-0-400	33.4	1.31	12	15	18	11/16	50	90	200	800	2.1	18.1	510	480						M8–M16
RC4-25-0-490	33.4	1.31	12	15	18	11/16	50	90	200	800	2.1	18.1	530	530	480	360	220	160	120	M8–M16
RC4-25-0-530	33.4	1.31	12	15	18	11/16	70	120	200	800	2.8	24.1	730	730	650	500	320	230	170	M8–M16
RC4-25-0-560	33.4	1.31	12	15	18	11/16	60	90	200	800	2.9	24.1	780	780	780	660	480	380	300	M8–M16
RC4-25-0-600	33.4	1.31	12	15	18	11/16	90	130	200	800	4.3	34.7	780	780	780	780	750	600	470	M8–M16
RC4-32-0-400	42.2	1.66	12	15	18	11/16	50	90	200	800	2.1	18.1	520	480						M12–M24
RC4-32-0-490	42.2	1.66	12	15	18	11/16	50	90	200	800	2.1	18.1	530	530	480	360	220	160	120	M12–M24
RC4-32-0-530	42.2	1.66	12	15	18	11/16	70	120	200	800	2.9	24.1	730	730	650	500	320	230	170	M12–M24
RC4-32-0-560	42.2	1.66	12	15	18	11/16	80	90	200	800	3.3	24.1	780	780	780	640	460	370	280	M12–M24
RC4-32-0-600	42.2	1.66	12	15	18	11/16	90	130	200	800	4.4	34.8	780	780	780	780	760	600	470	M12–M24
RC4-40-0-400	48.3	1.90	12	15	18	11/16	60	90	250	800	3.0	18.2	520	470						M8–M16
RC4-40-0-490	48.3	1.90	12	15	18	11/16	60	90	250	800	3.0	18.2	540	540	470	340	210	150	120	M8–M16
RC4-40-0-530	48.3	1.90	12	15	18	11/16	80	120	250	800	3.9	24.2	740	740	640	470	290	210	160	M8–M16
RC4-40-0-560	48.3	1.90	12	15	18	11/16	80	90	250	800	4.7	24.2	780	780	780	680	500	400	310	M8–M16
RC4-40-0-600	48.3	1.90	12	15	18	11/16	80	130	250	800	5.8	34.9	780	780	780	780	760	610	480	M8–M16
RC4-50-0-400	60.3	2.38	12	15	18	11/16	60	120	250	1000	3.0	30.0	530	480						M8–M16
RC4-50-1-400	60.3	2.38	16	17	24	15/16	70	100	250	1000	4.4	33.8	800	750						M8–M16
RC4-50-2-400	60.3	2.38	16	17	24	15/16	90	140	250	1000	5.7	47.3	1170	1090						M12–M24
RC4-50-0-490	60.3	2.38	12	15	18	11/16	60	120	250	1000	3.0	30.0	550	550	480	350	210	150	120	M8–M16
RC4-50-1-490	60.3	2.38	16	17	24	15/16	70	100	250	1000	4.4	33.8	830	830	750	600	380	270	200	M8–M16
RC4-50-2-490	60.3	2.38	16	17	24	15/16	90	140	250	1000	5.6	47.2	1210	1210	1090	800	500	360	270	M12–M24
RC4-50-0-530	60.3	2.38	12	15	18	11/16	80	80	250	1000	4.0	26.6	640	640	580	460	290	210	150	M8–M16
RC4-50-1-530	60.3	2.38	16	17	24	15/16	90	120	250	1000	5.6	40.5	1020	1020	930	740	490	340	240	M8–M16
RC4-50-2-530	60.3	2.38	16	17	24	15/16	80	110	250	1000	6.2	46.3	1390	1390	1290	1070	730	510	370	M12–M24
RC4-50-0-560	60.3	2.38	12	15	18	11/16	70	110	250	1000	4.2	36.6	780	780	780	640	460	370	280	M8–M16
RC4-50-1-560	60.3	2.38	16	17	24	15/16	70	160	250	1000	5.5	53.9	1390	1390	1280	1020	740	590	460	M8–M16
RC4-50-2-560	60.3	2.38	16	17	24	15/16	100	140	250	1000	7.8	59.0	1600	1600	1600	1430	1070	850	680	M12–M24
RC4-50-0-600	60.3	2.38	12	15	18	11/16	80	160	250	1000	5.9	53.1	780	780	780	780	770	610	480	M8–M16
RC4-50-1-600	60.3	2.38	16	17	24	15/16	110	150	250	1000	8.5	63.2	1600	1600	1600	1550	1160	920	730	M8–M16
RC4-50-2-600	60.3	2.38	16	17	24	15/16	110	150	300	1000	13	75.7	1600	1600	1600	1600	1600	1380	1100	M12–M24

RC4 PRESSED RISER CLAMP FOUR BOLT TYPE

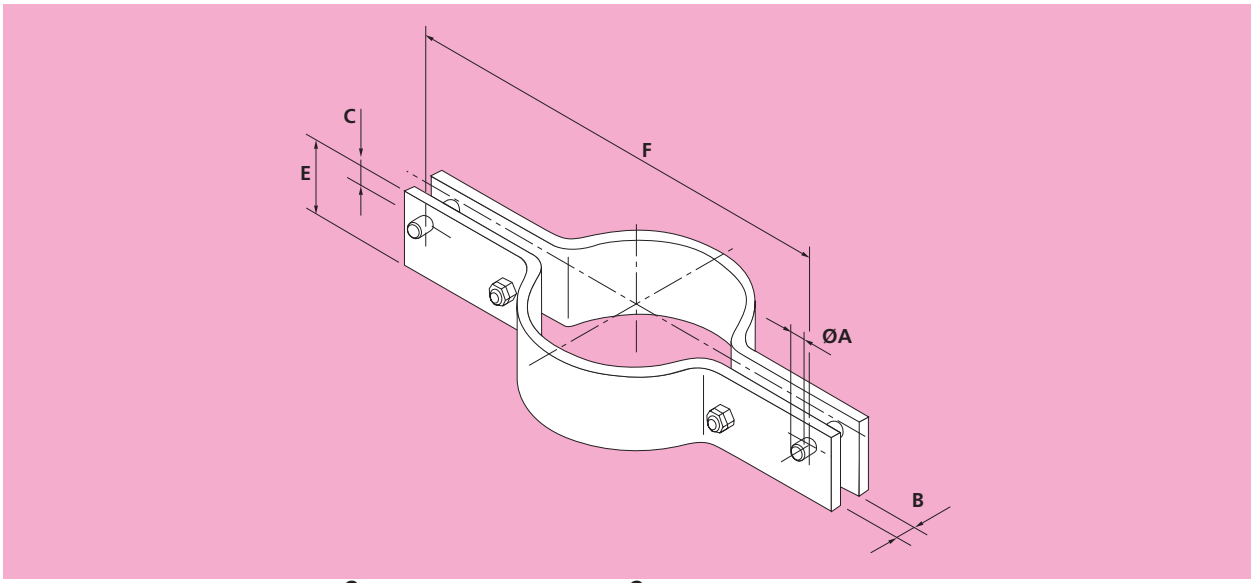

Material: Carbon Steel to 400°C Alloy Steel above 400°C ***Order by Part No. and Rod Centres "F"***

Part Number	Pipe O/D		A	B	C		E		F		Weight kgf		Load Capacity (kgf) at Temperature C							Compatible with Rod Sizes
	mm	in	mm	mm	mm	in	Min.	Max.	Min.	Max.	Min.	Max.	350	400	490	530	560	580	600	
RC4-65-0-400	73.0	2.88	12	15	18	11/16	60	120	250	1000	3.2	30.3	520	490						M8–M16
RC4-65-1-400	73.0	2.88	16	17	24	15/16	80	100	300	1000	6.0	34.1	770	730						M8–M16
RC4-65-2-400	73.0	2.88	16	17	24	15/16	70	140	300	1000	6.5	47.6	1120	1060						M8–M16
RC4-65-0-490	73.0	2.88	12	15	18	11/16	60	120	250	1000	3.1	30.2	530	530	490	390	260	180	130	M8–M16
RC4-65-1-490	73.0	2.88	16	17	24	15/16	80	100	250	1000	4.3	34.0	790	790	720	550	350	250	190	M8–M16
RC4-65-2-490	73.0	2.88	16	17	24	15/16	70	140	300	1000	6.5	47.6	1150	1150	1070	870	580	400	290	M8–M16
RC4-65-0-530	73.0	2.88	12	15	18	11/16	70	80	250	1000	3.6	26.8	610	610	570	470	310	220	160	M8–M16
RC4-65-1-530	73.0	2.88	16	17	24	15/16	60	120	300	1000	5.5	40.8	950	950	900	730	480	340	240	M8–M16
RC4-65-2-530	73.0	2.88	16	17	24	15/16	90	110	300	1000	8.2	46.6	1390	1390	1320	1110	760	530	380	M8–M16
RC4-65-0-560	73.0	2.88	12	15	18	11/16	70	100	250	1000	4.3	33.5	780	780	730	620	460	360	290	M8–M16
RC4-65-1-560	73.0	2.88	16	17	24	15/16	80	150	300	1000	7.4	51.0	1240	1240	1160	970	730	580	460	M8–M16
RC4-65-2-560	73.0	2.88	16	17	24	15/16	110	140	300	1000	10.0	59.3	1600	1600	1600	1470	1090	860	680	M8–M16
RC4-65-0-600	73.0	2.88	12	15	18	11/16	80	160	300	1000	7.0	53.5	780	780	780	780	760	600	480	M8–M16
RC4-65-1-600	73.0	2.88	16	17	24	15/16	120	140	300	1000	11	59.3	1600	1600	1600	1480	1140	910	720	M8–M16
RC4-65-2-600	73.0	2.88	16	17	24	15/16	100	200	300	1000	12	84.6	1600	1600	1600	1600	1600	1350	1070	M8–M16
RC4-80-0-400	88.9	3.5	12	15	18	11/16	70	120	300	1000	4.3	30.4	510	470						M12–M24
RC4-80-1-400	88.9	3.5	16	17	24	15/16	80	110	300	1000	6.0	37.6	840	790						M8–M16
RC4-80-2-400	88.9	3.5	16	17	24	15/16	90	150	350	1000	9.5	51.3	1180	1110						M12–M36
RC4-80-0-490	88.9	3.5	12	15	18	11/16	70	120	300	1000	4.2	30.4	520	520	470	360	230	160	120	M12–M24
RC4-80-1-490	88.9	3.5	16	17	24	15/16	80	110	300	1000	6.0	37.6	870	870	790	620	390	280	210	M12–M36
RC4-80-2-490	88.9	3.5	16	17	24	15/16	70	150	300	1000	6.6	51.2	1220	1220	1110	860	560	390	290	M8–M16
RC4-80-0-530	88.9	3.5	12	15	18	11/16	70	90	300	1000	5.0	30.3	680	680	630	510	340	240	170	M12–M24
RC4-80-1-530	88.9	3.5	16	17	24	15/16	60	130	300	1000	5.7	44.4	1040	1040	930	720	470	330	240	M12–M36
RC4-80-2-530	88.9	3.5	16	17	24	15/16	90	120	300	1000	8.4	51.1	1500	1500	1400	1140	740	520	380	M8–M16
RC4-80-0-560	88.9	3.5	12	15	18	11/16	80	110	300	1000	5.7	37.0	710	710	710	650	470	380	290	M12–M24
RC4-80-1-560	88.9	3.5	16	17	24	15/16	80	160	300	1000	7.5	54.6	1300	1300	1200	980	730	580	460	M12–M36
RC4-80-2-560	88.9	3.5	16	17	24	15/16	110	140	300	1000	10	59.6	1600	1600	1600	1410	1060	840	670	M8–M16
RC4-80-0-600	88.9	3.5	12	15	18	11/16	80	110	300	1000	7.1	46.2	780	780	780	780	760	600	470	M12–M24
RC4-80-1-600	88.9	3.5	16	17	24	15/16	120	150	300	1000	11	63.8	1600	1600	1600	1520	1150	910	720	M12–M36
RC4-80-2-600	88.9	3.5	16	17	24	15/16	100	150	300	1000	12	76.4	1600	1600	1600	1600	1600	1410	1120	M8–M16
RC4-90-0-400	101.6	4	12	15	18	11/16	70	120	300	1000	4.3	30.6	500	470						M8–M16
RC4-90-1-400	101.6	4	16	17	24	15/16	70	110	300	1000	5.4	37.8	820	760						M8–M16
RC4-90-2-400	101.6	4	16	17	24	15/16	80	150	350	1000	8.6	51.5	1160	1080						M8–M16
RC4-90-0-490	101.6	4	12	15	18	11/16	70	120	300	1000	4.3	30.5	520	520	470	360	230	160	120	M8–M16
RC4-90-1-490	101.6	4	16	17	24	15/16	70	110	300	1000	5.4	37.8	850	850	750	560	350	250	190	M8–M16
RC4-90-2-490	101.6	4	16	17	24	15/16	70	150	300	1000	6.6	51.4	1200	1200	1100	880	580	410	290	M8–M16
RC4-90-0-530	101.6	4	12	15	18	11/16	60	90	300	1000	4.4	30.5	600	600	600	470	300	210	160	M8–M16
RC4-90-1-530	101.6	4	16	17	24	15/16	90	130	300	1000	6.9	44.6	1030	1030	940	740	470	330	250	M8–M16
RC4-90-2-530	101.6	4	16	17	24	15/16	90	120	300	1000	8.5	51.3	1480	1480	1370	1150	760	540	400	M8–M16
RC4-90-0-560	101.6	4	12	15	18	11/16	80	110	300	1000	5.9	37.3	780	780	780	640	470	370	290	M8–M16
RC4-90-1-560	101.6	4	16	17	24	15/16	80	110	300	1000	7.6	47.1	1340	1340	1250	1050	790	620	490	M8–M16
RC4-90-2-560	101.6	4	16	17	24	15/16	110	150	300	1000	10	64.1	1580	1580	1580	1490	1120	880	690	M8–M16
RC4-90-0-600	101.6	4	12	15	18	11/16	80	110	300	1000	7.2	46.4	780	780	780	780	780	620	490	M8–M16
RC4-90-1-600	101.6	4	16	17	24	15/16	120	160	300	1000	11	68.4	1580	1580	1580	1560	1200	950	760	M8–M16
RC4-90-2-600	101.6	4	16	17	24	15/16	120	150	350	1000	16	76.7	1600	1600	1600	1600	1580	1370	1090	M8–M16

RC4 PRESSED RISER CLAMP FOUR BOLT TYPE

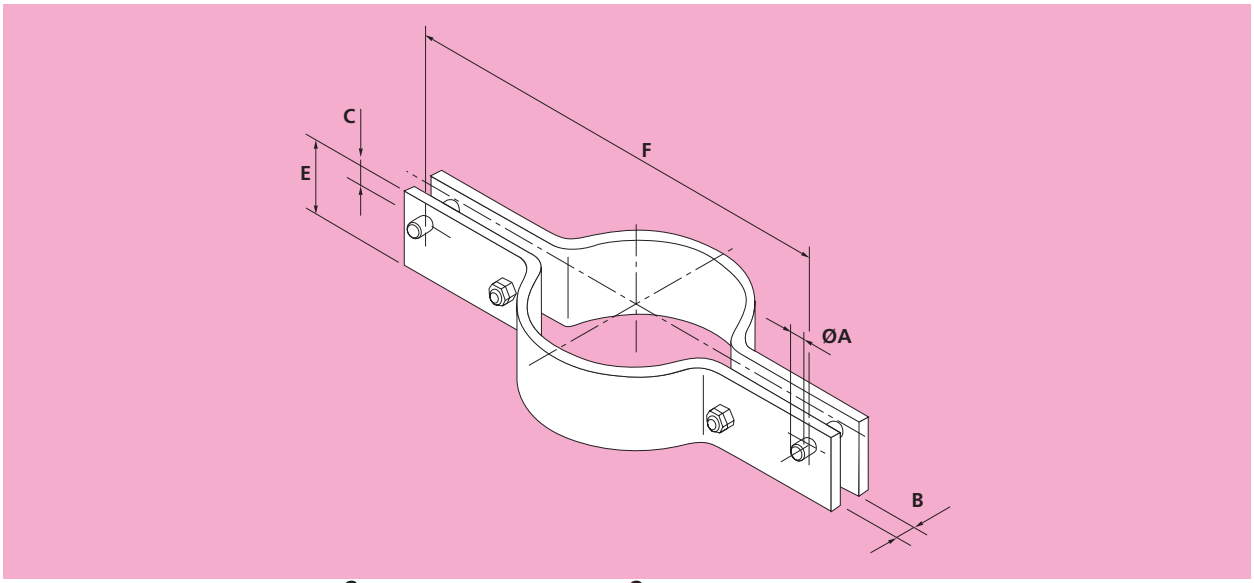

Material: Carbon Steel to 400°C Alloy Steel above 400°C ***Order by Part No. and Rod Centres "F"***

Part Number	Pipe O/D		A	B	C		E		F		Weight kgf		Load Capacity (kgf) at Temperature C							Compatible with Rod Sizes
	mm	in	mm	mm	mm	in	Min.	Max.	Min.	Max.	Min.	Max.	350	400	490	530	560	580	600	
RC4-100-0-400	114.3	4.5	12	15	18	11/16	60	90	300	1200	3.8	36.3	530	480						M12–M24
RC4-100-1-400	114.3	4.5	16	17	24	15/16	80	130	350	1200	7.1	53.1	800	740						M12–M36
RC4-100-2-400	114.3	4.5	16	17	24	15/16	80	120	350	1200	8.7	61.2	1160	1110						M12–M36
RC4-100-3-400	114.3	4.5	20	20	30	13/16	100	150	400	1200	16.5	92.6	2170	2090						M8–M16
RC4-100-0-490	114.3	4.5	12	15	18	11/16	60	90	300	1200	3.8	36.3	540	540	480	360	220	160	120	M12–M24
RC4-100-1-490	114.3	4.5	16	17	24	15/16	80	130	350	1200	7.0	53.0	830	830	740	560	350	250	190	M12–M36
RC4-100-2-490	114.3	4.5	16	17	24	15/16	80	120	350	1200	8.6	61.1	1190	1190	1120	890	580	410	300	M12–M36
RC4-100-3-490	114.3	4.5	20	20	30	13/16	100	150	400	1200	16.3	92.5	2240	2240	2130	1740	1170	820	580	M8–M16
RC4-100-0-530	114.3	4.5	12	15	18	11/16	80	100	300	1200	5.0	40.4	620	620	570	460	300	220	150	M12–M24
RC4-100-1-530	114.3	4.5	16	17	24	15/16	70	150	350	1200	7.6	61.1	970	970	890	720	480	340	240	M12–M36
RC4-100-2-530	114.3	4.5	16	17	24	15/16	100	140	350	1200	10.7	71.2	1330	1330	1330	1110	740	520	380	M12–M36
RC4-100-3-530	114.3	4.5	20	20	30	13/16	120	170	400	1200	19.5	104.7	2570	2570	2450	2070	1430	1000	710	M8–M16
RC4-100-0-560	114.3	4.5	12	15	18	11/16	70	130	300	1200	5.2	52.4	780	780	760	630	470	370	290	M12–M24
RC4-100-1-560	114.3	4.5	16	17	24	15/16	90	130	350	1200	9.7	66.1	1310	1310	1230	1040	770	610	480	M12–M36
RC4-100-2-560	114.3	4.5	16	17	24	15/16	70	180	350	1200	10.0	91.4	1360	1360	1360	1360	1060	840	670	M12–M36
RC4-100-3-560	114.3	4.5	20	20	30	13/16	150	210	400	1200	24.2	129.2	2630	2630	2630	2630	2060	1630	1290	M8–M16
RC4-100-0-600	114.3	4.5	12	15	18	11/16	90	130	350	1200	9.3	65.4	780	780	780	780	770	610	480	M12–M24
RC4-100-1-600	114.3	4.5	16	17	24	15/16	80	190	350	1200	11.4	96.5	1360	1360	1360	1360	1190	940	750	M12–M36
RC4-100-2-600	114.3	4.5	16	17	24	15/16	110	180	350	1200	15.6	109.6	1600	1600	1600	1600	1600	1380	1100	M12–M36
RC4-100-3-600	114.3	4.5	20	20	30	13/16	150	220	400	1200	30.0	157.6	2630	2630	2630	2630	2630	2550	2020	M8–M16
RC4-125-0-400	141.3	5.56	12	15	18	11/16	70	90	350	1200	5.1	36.7	530	500						M8–M16
RC4-125-1-400	141.3	5.56	16	17	24	15/16	90	130	400	1200	9.0	53.6	800	750						M8–M16
RC4-125-2-400	141.3	5.56	16	17	24	15/16	90	120	400	1200	11.3	61.8	1150	1090						M12–M24
RC4-125-3-400	141.3	5.56	20	20	30	13/16	110	150	450	1200	20.5	93.7	2130	2050						M8–M16
RC4-125-0-490	141.3	5.56	12	15	18	11/16	70	90	350	1200	5.1	36.7	550	550	500	370	230	160	130	M8–M16
RC4-125-1-490	141.3	5.56	16	17	24	15/16	80	130	350	1200	7.2	53.5	830	830	760	610	390	280	200	M8–M16
RC4-125-2-490	141.3	5.56	16	17	24	15/16	90	120	400	1200	11.1	61.7	1180	1180	1100	900	580	410	300	M12–M24
RC4-125-3-490	141.3	5.56	20	20	30	13/16	110	150	450	1200	20.2	93.4	2200	2200	2080	1740	1160	810	580	M12–M36
RC4-125-0-530	141.3	5.56	12	15	18	11/16	70	110	350	1200	6.1	44.8	690	690	630	500	340	230	170	M8–M16
RC4-125-1-530	141.3	5.56	16	17	24	15/16	70	160	350	1200	7.8	65.8	1030	1030	950	760	510	350	250	M8–M16
RC4-125-2-530	141.3	5.56	16	17	24	15/16	110	140	400	1200	13.5	71.9	1400	1400	1310	1090	720	510	380	M12–M24
RC4-125-3-530	141.3	5.56	20	20	30	13/16	130	170	450	1200	23.7	105.8	2530	2530	2400	2030	1400	980	690	M12–M36
RC4-125-0-560	141.3	5.56	12	15	18	11/16	80	140	350	1200	6.9	57.0	780	780	780	650	470	370	290	M8–M16
RC4-125-1-560	141.3	5.56	16	17	24	15/16	80	130	350	1200	8.9	66.7	1030	1030	1030	1020	740	590	460	M8–M16
RC4-125-2-560	141.3	5.56	16	17	24	15/16	80	180	400	1200	13.0	92.3	1600	1600	1600	1460	1090	860	690	M12–M24
RC4-125-3-560	141.3	5.56	20	20	30	13/16	110	220	450	1200	25.0	136.7	2630	2630	2630	2630	2100	1680	1340	M12–M36
RC4-125-0-600	141.3	5.56	12	15	18	11/16	80	130	350	1200	8.6	66.0	780	780	780	780	740	590	460	M8–M16
RC4-125-1-600	141.3	5.56	16	17	24	15/16	90	190	400	1200	14.6	97.4	1600	1600	1600	1540	1160	920	730	M8–M16
RC4-125-2-600	141.3	5.56	16	17	24	15/16	120	180	400	1200	19.3	110.6	1600	1600	1600	1600	1600	1340	1070	M12–M24
RC4-125-3-600	141.3	5.56	20	20	30	13/16	160	230	450	1200	36.1	166.3	2630	2630	2630	2630	2630	2580	2050	M12–M36

RC6 PRESSED RISER CLAMP SIX BOLT TYPE

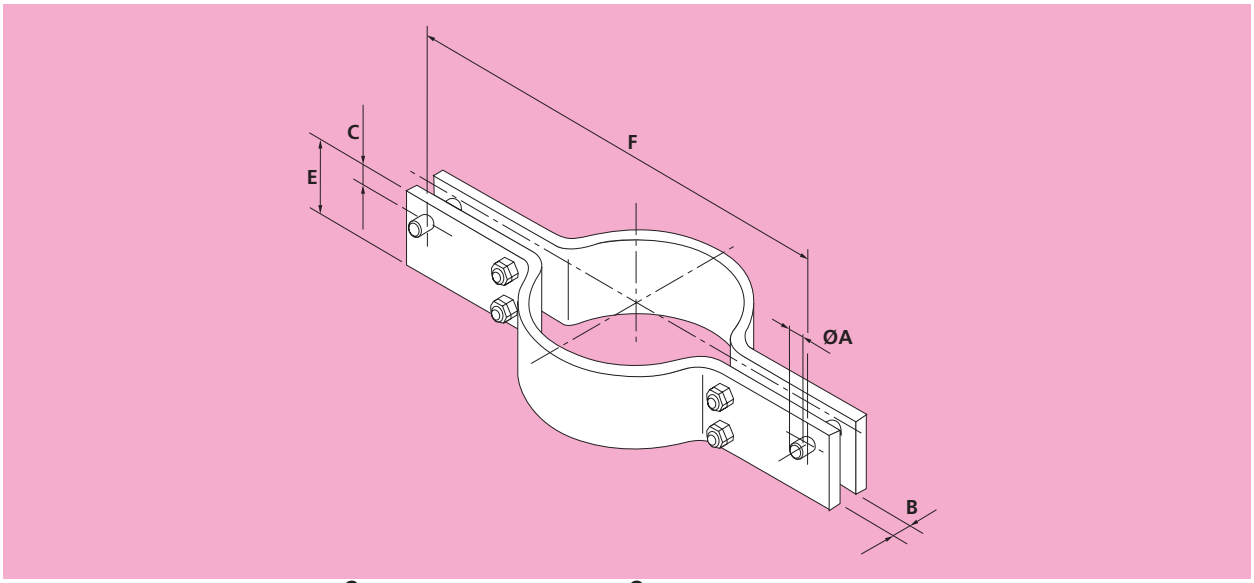

Material: Carbon Steel to 400°C Alloy Steel above 400°C ***Order by Part No. and Rod Centres "F"***

Part Number	Pipe O/D		A	B	C		E		F		Weight kgf		Load Capacity (kgf) at Temperature C							Compatible with Rod Sizes
	mm	in	mm	mm	mm	in	Min.	Max.	Min.	Max.	Min.	Max.	350	400	490	530	560	580	600	
RC6-150-0-400	168.3	6.63	12	15	18	11/16	80	90	350	1200	6.0	37.1	540	500						M8–M16
RC6-150-1-400	168.3	6.63	16	17	24	15/16	80	130	400	1200	8.1	54.1	810	750						M8–M16
RC6-150-2-400	168.3	6.63	16	17	24	15/16	100	120	400	1200	12.7	62.4	1150	1100						M8–M16
RC6-150-3-400	168.3	6.63	20	20	30	1 3/16	100	150	450	1200	18.7	94.1	2130	2050						M12–M24
RC6-150-4-400	168.3	6.63	24	25	36	1 7/16	150	230	450	1200	28.6	145.7	3430	3310						M12–M36
RC6-150-0-490	168.3	6.63	12	15	18	11/16	80	90	350	1200	6.0	37.1	550	550	510	410	280	190	140	M8–M16
RC6-150-1-490	168.3	6.63	16	17	24	15/16	80	130	400	1200	8.1	54.1	830	830	750	560	360	250	190	M8–M16
RC6-150-2-490	168.3	6.63	16	17	24	15/16	80	120	400	1200	10.1	62.2	1180	1180	1110	890	580	410	300	M8–M16
RC6-150-3-490	168.3	6.63	20	20	30	1 3/16	100	150	450	1200	18.7	94.1	2190	2190	2090	1740	1170	810	580	M12–M24
RC6-150-4-490	168.3	6.63	24	25	36	1 7/16	150	220	450	1200	28.6	139.2	3370	3370	3200	2710	1820	1270	900	M12–M36
RC6-150-0-530	168.3	6.63	12	15	18	11/16	80	100	350	1200	6.0	41.2	620	620	570	460	290	210	150	M8–M16
RC6-150-1-530	168.3	6.63	16	17	24	15/16	80	150	400	1200	10.1	62.4	970	970	890	720	480	340	240	M8–M16
RC6-150-2-530	168.3	6.63	16	17	24	15/16	100	140	400	1200	12.5	72.6	1410	1410	1310	1100	740	520	380	M8–M16
RC6-150-3-530	168.3	6.63	20	20	30	1 3/16	120	170	450	1200	22.2	106.5	2520	2520	2400	2030	1430	1000	710	M12–M24
RC6-150-4-530	168.3	6.63	24	25	36	1 7/16	120	190	450	1200	28.4	140.0	3660	3660	3660	3240	2370	1660	1200	M12–M36
RC6-150-0-560	168.3	6.63	12	15	18	11/16	80	130	350	1200	7.1	53.5	780	780	770	630	470	370	290	M8–M16
RC6-150-1-560	168.3	6.63	16	17	24	15/16	90	130	400	1200	11.3	67.4	1300	1300	1220	1030	770	610	480	M8–M16
RC6-150-2-560	168.3	6.63	16	17	24	15/16	80	180	400	1200	13.3	93.2	1600	1600	1600	1470	1110	880	700	M8–M16
RC6-150-3-560	168.3	6.63	20	20	30	1 3/16	150	220	450	1200	27.7	137.6	2630	2630	2630	2630	2060	1630	1290	M12–M24
RC6-150-4-560	168.3	6.63	24	25	36	1 7/16	150	230	450	1200	35.4	169.3	3660	3660	3660	3660	3230	2620	2080	M12–M36
RC6-150-0-600	168.3	6.63	12	15	18	11/16	90	130	400	1200	11.0	66.6	780	780	780	780	770	610	480	M8–M16
RC6-150-1-600	168.3	6.63	16	17	24	15/16	80	190	400	1200	13.3	98.4	1600	1600	1600	1560	1180	930	740	M8–M16
RC6-150-2-600	168.3	6.63	16	17	24	15/16	110	180	400	1200	18.1	111.5	1600	1600	1600	1600	1600	1360	1080	M8–M16
RC6-150-3-600	168.3	6.63	20	20	30	1 3/16	150	230	450	1200	34.3	167.6	2630	2630	2630	2630	2630	2600	2060	M12–M24
RC6-150-4-600	168.3	6.63	24	25	36	1 7/16	180	260	500	1200	54.6	218.2	3660	3660	3660	3660	3660	3660	3300	M12–M36

RC6 PRESSED RISER CLAMP SIX BOLT TYPE

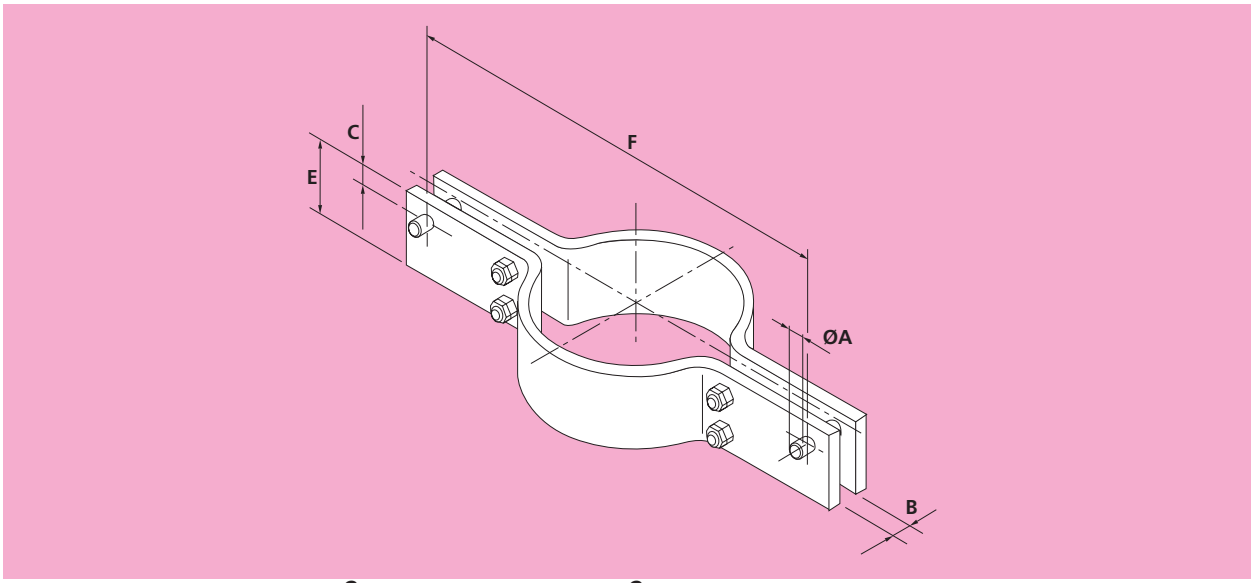

Material: Carbon Steel to 400°C Alloy Steel above 400°C ***Order by Part No. and Rod Centres "F"***

Part Number	Pipe O/D		A	B	C		E		F		Weight kgf		Load Capacity (kgf) at Temperature C							Compatible with Rod Sizes
	mm	in	mm	mm	mm	in	Min.	Max.	Min.	Max.	Min.	Max.	350	400	490	530	560	580	600	
RC6-175-0-400	193.7	7.63	12	15	18	11/16	80	90	400	1200	6.8	37.4	540	510						M8–M16
RC6-175-1-400	193.7	7.63	16	17	24	15/16	80	130	400	1200	8.4	54.6	820	770						M8–M16
RC6-175-2-400	193.7	7.63	16	17	24	15/16	100	120	450	1200	14.2	62.9	1160	1110						M8–M16
RC6-175-3-400	193.7	7.63	20	20	30	1 3/16	120	150	500	1200	25.0	95.2	2140	2070						M12–M24
RC6-175-4-400	193.7	7.63	24	25	36	1 7/16	160	220	500	1200	33.8	140.6	3280	3170						M12–M36
RC6-175-5-400	193.7	7.63	30	29	45	1 3/4	170	230	550	1200	49.5	174.0	4720	4610						M12–M36
RC6-175-0-490	193.7	7.63	12	15	18	11/16	80	90	400	1200	6.8	37.4	560	560	510	420	260	190	140	M8–M16
RC6-175-1-490	193.7	7.63	16	17	24	15/16	80	130	400	1200	8.4	54.6	840	840	770	610	390	280	200	M8–M16
RC6-175-2-490	193.7	7.63	16	17	24	15/16	80	120	400	1200	10.3	62.8	1200	1200	1120	940	620	440	320	M8–M16
RC6-175-3-490	193.7	7.63	20	20	30	1 3/16	100	150	450	1200	19.1	95.0	2210	2210	2110	1790	1260	880	630	M12–M24
RC6-175-4-490	193.7	7.63	24	25	36	1 7/16	160	220	500	1200	33.6	140.4	3380	3380	3230	2690	1810	1260	900	M12–M36
RC6-175-5-490	193.7	7.63	30	29	45	1 3/4	150	230	500	1200	40.6	173.8	4870	4870	4700	4040	2820	1980	1430	M12–M36
RC6-175-0-530	193.7	7.63	12	15	18	11/16	80	100	400	1200	8.1	41.6	630	630	580	470	320	220	160	M8–M16
RC6-175-1-530	193.7	7.63	16	17	24	15/16	80	150	400	1200	10.3	63.0	980	980	900	740	500	350	250	M8–M16
RC6-175-2-530	193.7	7.63	16	17	24	15/16	90	140	400	1200	11.6	73.2	1420	1420	1330	1090	710	500	360	M8–M16
RC6-175-3-530	193.7	7.63	20	20	30	1 3/16	110	170	450	1200	21.0	107.6	2540	2540	2420	2050	1400	980	700	M12–M24
RC6-175-4-530	193.7	7.63	24	25	36	1 7/16	130	190	500	1200	33.9	141.3	3660	3660	3660	3260	2400	1690	1220	M12–M36
RC6-175-5-530	193.7	7.63	30	29	45	1 3/4	170	260	500	1200	45.9	196.3	5560	5560	5370	4630	3240	2270	1640	M12–M36
RC6-175-0-560	193.7	7.63	12	15	18	11/16	80	130	400	1200	8.1	54.0	780	780	780	630	460	370	290	M8–M16
RC6-175-1-560	193.7	7.63	16	17	24	15/16	80	120	400	1200	10.3	62.8	1200	1200	1130	950	720	570	450	M8–M16
RC6-175-2-560	193.7	7.63	16	17	24	15/16	120	170	400	1200	15.4	88.8	1600	1600	1600	1400	1060	840	670	M8–M16
RC6-175-3-560	193.7	7.63	20	20	30	1 3/16	140	210	450	1200	26.4	132.7	2630	2630	2630	2620	2040	1630	1300	M12–M24
RC6-175-4-560	193.7	7.63	24	25	36	1 7/16	160	230	500	1200	41.6	170.8	3660	3660	3660	3660	3260	2640	2100	M12–M36
RC6-175-5-560	193.7	7.63	30	29	45	1 3/4	150	240	500	1200	48.3	206.7	6060	6060	6060	5760	4590	3690	2930	M12–M36
RC6-175-0-600	193.7	7.63	12	15	18	11/16	90	130	400	1200	11.2	67.3	780	780	780	780	780	630	500	M8–M16
RC6-175-1-600	193.7	7.63	16	17	24	15/16	90	190	450	1200	16.7	99.3	1600	1600	1600	1580	1200	950	760	M8–M16
RC6-175-2-600	193.7	7.63	16	17	24	15/16	120	180	450	1200	22.1	112.6	1600	1600	1600	1600	1600	1380	1090	M8–M16
RC6-175-3-600	193.7	7.63	20	20	30	1 3/16	140	230	450	1200	32.7	169.1	2630	2630	2630	2630	2630	2630	2080	M12–M24
RC6-175-4-600	193.7	7.63	24	25	36	1 7/16	170	250	500	1200	52.5	211.7	3660	3660	3660	3660	3660	3660	3180	M12–M36
RC6-175-5-600	193.7	7.63	30	29	45	1 3/4	230	320	500	1100	73.4	255.1	6090	6090	6090	6090	6090	5860	4630	M12–M36

RC6 PRESSED RISER CLAMP SIX BOLT TYPE

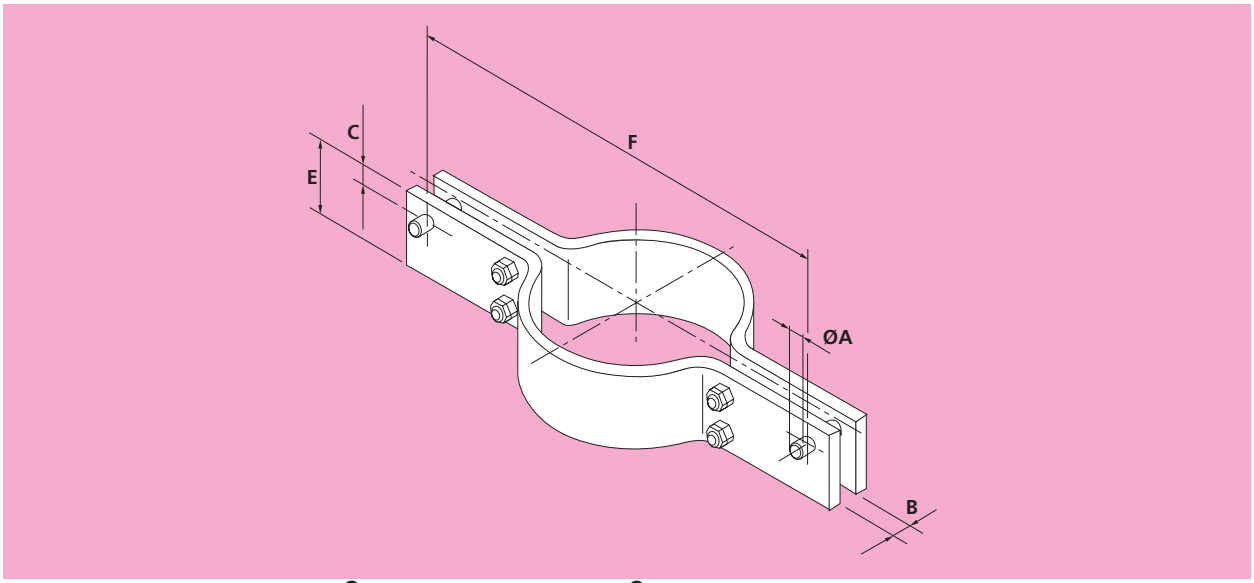

Material: Carbon Steel to 400°C Alloy Steel above 400°C ***Order by Part No. and Rod Centres "F"***

Part Number	Pipe O/D		A	B	C		E		F		Weight kgf		Load Capacity (kgf) at Temperature C							Compatible with Rod Sizes
	mm	in	mm	mm	mm	in	Min.	Max.	Min.	Max.	Min.	Max.	350	400	490	530	560	580	600	
RC6-200-0-400	219.1	8.63	12	15	18	11/16	80	110	400	1500	7.0	56.5	530	500						M8–M16
RC6-200-1-400	219.1	8.63	16	17	24	15/16	90	160	450	1500	10.5	83.0	790	750						M8–M16
RC6-200-2-400	219.1	8.63	16	17	24	15/16	100	150	450	1500	14.5	97.0	1150	1100						M8–M16
RC6-200-3-400	219.1	8.63	20	20	30	1 3/16	120	190	500	1500	25.5	148.4	2160	2080						M12–M24
RC6-200-4-400	219.1	8.63	24	25	36	1 7/16	150	210	500	1500	32.4	192.7	3290	3220						M12–M36
RC6-200-5-400	219.1	8.63	30	29	45	1 3/4	160	230	550	1500	47.8	243.7	4770	4720						M12–M36
RC6-200-6-400	219.1	8.63	36	41	54	2 1/8	200	320	600	1400	77.2	322.0	7520	7430						M20–M64
RC6-200-0-490	219.1	8.63	12	15	18	11/16	80	110	400	1500	7.0	56.5	540	540	500	410	280	190	140	M8–M16
RC6-200-1-490	219.1	8.63	16	17	24	15/16	90	160	450	1500	10.5	82.9	820	820	750	620	400	280	210	M8–M16
RC6-200-2-490	219.1	8.63	16	17	24	15/16	80	150	450	1500	11.5	96.9	1190	1190	1100	860	560	400	290	M8–M16
RC6-200-3-490	219.1	8.63	20	20	30	1 3/16	100	190	500	1500	21.1	148.2	2220	2220	2100	1720	1160	810	580	M12–M24
RC6-200-4-490	219.1	8.63	24	25	36	1 7/16	150	210	500	1500	32.2	192.1	3390	3390	3280	2690	1810	1260	900	M12–M36
RC6-200-5-490	219.1	8.63	30	29	45	1 3/4	160	220	550	1500	47.2	232.6	4680	4680	4570	4010	2820	1990	1430	M12–M36
RC6-200-6-490	219.1	8.63	36	41	54	2 1/8	200	310	600	1400	76.9	311.6	7490	7490	7300	6430	4810	3500	2480	M20–M64
RC6-200-0-530	219.1	8.63	12	15	18	11/16	80	130	450	1500	9.1	66.8	650	650	600	490	330	230	170	M8–M16
RC6-200-1-530	219.1	8.63	16	17	24	15/16	80	120	450	1500	11.5	77.6	930	930	870	730	510	360	260	M8–M16
RC6-200-2-530	219.1	8.63	16	17	24	15/16	100	170	450	1500	14.4	109.8	1360	1360	1280	1070	720	510	370	M8–M16
RC6-200-3-530	219.1	8.63	20	20	30	1 3/16	120	220	500	1500	25.2	171.5	2600	2600	2490	2100	1420	990	710	M12–M24
RC6-200-4-530	219.1	8.63	24	25	36	1 7/16	130	240	550	1500	37.1	219.4	3660	3660	3660	3180	2240	1580	1140	M12–M36
RC6-200-5-530	219.1	8.63	30	29	45	1 3/4	180	250	550	1500	53.0	264.4	5390	5390	5260	4560	3210	2260	1630	M12–M36
RC6-200-6-530	219.1	8.63	36	41	54	2 1/8	230	310	600	1250	88.0	282.4	7620	7620	7620	7340	5600	4070	2890	M20–M64
RC6-200-0-560	219.1	8.63	12	15	18	11/16	90	160	450	1500	10.2	82.2	780	780	760	630	470	370	290	M8–M16
RC6-200-1-560	219.1	8.63	16	17	24	15/16	90	150	450	1500	12.9	96.9	1190	1190	1120	950	720	570	460	M8–M16
RC6-200-2-560	219.1	8.63	16	17	24	15/16	80	150	450	1500	15.2	116.0	1310	1310	1310	1310	1090	880	700	M8–M16
RC6-200-3-560	219.1	8.63	20	20	30	1 3/16	150	190	500	1500	31.3	172.5	2510	2510	2510	2510	2040	1610	1280	M12–M24
RC6-200-4-560	219.1	8.63	24	25	36	1 7/16	170	210	550	1500	48.3	219.0	3660	3660	3660	3660	3160	2590	2040	M12–M36
RC6-200-5-560	219.1	8.63	30	29	45	1 3/4	160	300	550	1500	56.1	316.8	5480	5480	5480	5480	4580	3690	2930	M12–M36
RC6-200-6-560	219.1	8.63	36	41	54	2 1/8	200	320	600	1100	89.1	261.2	7620	7620	7620	7620	7310	5930	4700	M20–M64
RC6-200-0-600	219.1	8.63	12	15	18	11/16	90	160	450	1500	12.6	102.4	780	780	780	780	750	590	460	M8–M16
RC6-200-1-600	219.1	8.63	16	17	24	15/16	80	160	450	1500	15.2	123.7	1310	1310	1310	1310	1180	930	740	M8–M16
RC6-200-2-600	219.1	8.63	16	17	24	15/16	110	220	450	1500	20.8	170.0	1600	1600	1600	1600	1600	1340	1060	M8–M16
RC6-200-3-600	219.1	8.63	20	20	30	1 3/16	150	210	500	1500	38.9	217.4	2630	2630	2630	2630	2630	2570	2030	M12–M24
RC6-200-4-600	219.1	8.63	24	25	36	1 7/16	180	320	550	1500	60.9	333.4	3660	3660	3660	3660	3660	3660	3240	M12–M36
RC6-200-5-600	219.1	8.63	30	29	45	1 3/4	240	320	550	1100	83.6	257.3	6090	6090	6090	6090	6090	5750	4570	M12–M36
RC6-200-6-600	219.1	8.63	36	41	54	2 1/8	230	310	600	750	115.8	184.6	7620	7620	7620	7620	7620	7620	7460	M20–M64

RC6 PRESSED RISER CLAMP SIX BOLT TYPE

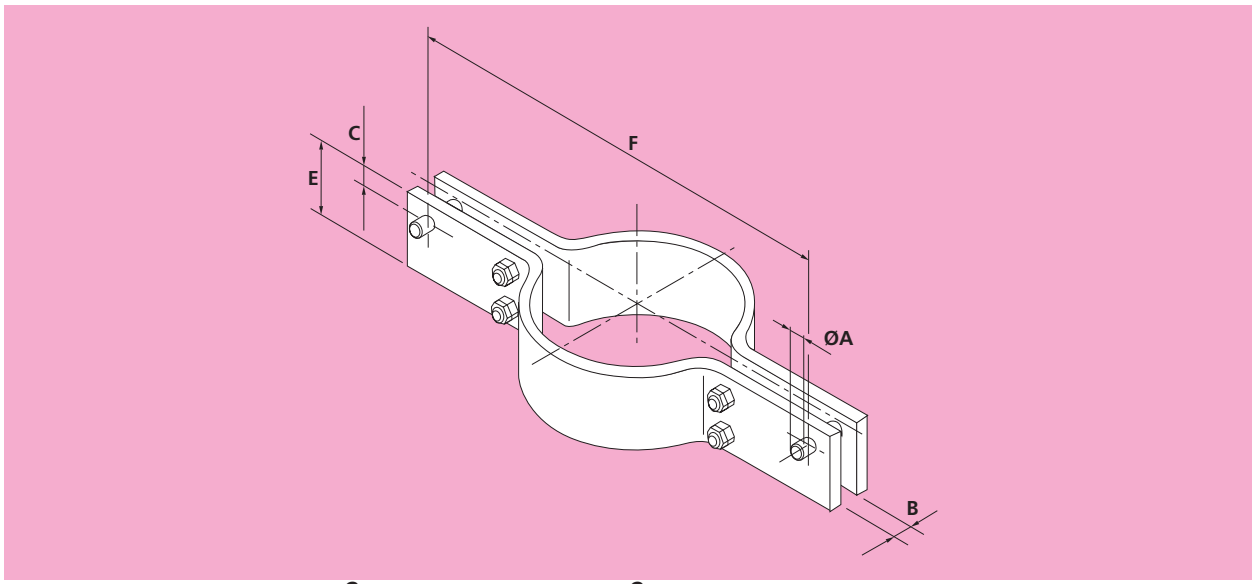

Material: Carbon Steel to 400°C Alloy Steel above 400°C ***Order by Part No. and Rod Centres "F"***

Part Number	Pipe O/D		A	B	C		E		F		Weight kgf		Load Capacity (kgf) at Temperature C							Compatible with Rod Sizes
	mm	in	mm	mm	mm	in	Min.	Max.	Min.	Max.	Min.	Max.	350	400	490	530	560	580	600	
RC6-225-0-400	244.5	9.63	12	15	18	11/16	80	110	450	1500	7.8	57.0	530	500						M8–M16
RC6-225-1-400	244.5	9.63	16	17	24	15/16	100	160	500	1500	16.0	83.7	800	760						M8–M16
RC6-225-2-400	244.5	9.63	16	17	24	15/16	100	150	500	1500	16.0	97.7	1170	1110						M8–M16
RC6-225-3-400	244.5	9.63	20	20	30	1 3/16	120	190	550	1500	27.8	149.5	2170	2090						M12–M24
RC6-225-4-400	244.5	9.63	24	25	36	1 7/16	160	210	550	1500	37.6	193.9	3310	3190						M12–M36
RC6-225-5-400	244.5	9.63	30	29	45	1 3/4	170	230	600	1500	54.7	245.3	4790	4650						M12–M36
RC6-225-6-400	244.5	9.63	36	41	54	2 1/8	210	320	650	1400	87.9	325.0	7550	7400						M20–M64
RC6-225-0-490	244.5	9.63	12	15	18	11/16	80	110	450	1500	7.8	57.0	550	550	500	390	250	180	130	M8–M16
RC6-225-1-490	244.5	9.63	16	17	24	15/16	80	160	450	1500	9.5	83.6	830	830	750	570	360	260	190	M8–M16
RC6-225-2-490	244.5	9.63	16	17	24	15/16	100	150	500	1500	16.0	97.7	1200	1200	1120	940	630	450	330	M8–M16
RC6-225-3-490	244.5	9.63	20	20	30	1 3/16	100	190	500	1500	21.5	149.3	2240	2240	2130	1770	1190	830	590	M12–M24
RC6-225-4-490	244.5	9.63	24	25	36	1 7/16	160	210	550	1500	37.4	193.6	3410	3410	3200	2590	1740	1210	860	M12–M36
RC6-225-5-490	244.5	9.63	30	29	45	1 3/4	170	220	600	1500	54.4	234.4	4700	4700	4570	3930	2720	1900	1380	M12–M36
RC6-225-6-490	244.5	9.63	36	41	54	2 1/8	190	310	600	1400	74.2	313.7	7510	7510	7310	6400	4680	3380	2410	M20–M64
RC6-225-0-530	244.5	9.63	12	15	18	11/16	80	130	450	1500	9.2	67.3	660	660	610	490	330	230	160	M8–M16
RC6-225-1-530	244.5	9.63	16	17	24	15/16	80	120	450	1500	11.8	78.1	940	940	880	730	510	360	260	M8–M16
RC6-225-2-530	244.5	9.63	16	17	24	15/16	100	170	450	1500	14.6	110.7	1380	1380	1290	1080	750	520	380	M8–M16
RC6-225-3-530	244.5	9.63	20	20	30	1 3/16	120	220	500	1500	25.7	172.8	2630	2630	2500	2110	1460	1020	720	M12–M24
RC6-225-4-530	244.5	9.63	24	25	36	1 7/16	130	240	550	1500	37.7	220.9	3660	3660	3660	3270	2280	1600	1150	M12–M36
RC6-225-5-530	244.5	9.63	30	29	45	1 3/4	200	250	600	1500	63.7	266.1	5410	5410	5270	4610	3250	2270	1640	M12–M36
RC6-225-6-530	244.5	9.63	36	41	54	2 1/8	220	310	600	1250	85.6	284.5	7620	7620	7620	7340	5490	3970	2830	M20–M64
RC6-225-0-560	244.5	9.63	12	15	18	11/16	90	160	450	1500	10.4	82.8	780	780	760	630	470	370	290	M8–M16
RC6-225-1-560	244.5	9.63	16	17	24	15/16	90	160	450	1500	13.2	104.1	1290	1290	1210	1020	770	610	480	M8–M16
RC6-225-2-560	244.5	9.63	16	17	24	15/16	120	150	450	1500	17.5	116.8	1600	1600	1600	1400	1060	840	660	M8–M16
RC6-225-3-560	244.5	9.63	20	20	30	1 3/16	150	190	500	1500	32.0	173.6	2630	2630	2630	2550	2030	1650	1310	M12–M24
RC6-225-4-560	244.5	9.63	24	25	36	1 7/16	160	220	550	1500	46.3	231.1	3660	3660	3660	3660	3170	2510	2010	M12–M36
RC6-225-5-560	244.5	9.63	30	29	45	1 3/4	180	300	600	1500	68.5	319.1	6090	6090	6090	5680	4650	3800	3000	M12–M36
RC6-225-6-560	244.5	9.63	36	41	54	2 1/8	220	320	650	1100	105.1	263.4	7620	7620	7620	7620	7360	6010	4750	M20–M64
RC6-225-0-600	244.5	9.63	12	15	18	11/16	90	160	450	1500	12.9	103.2	780	780	780	780	770	610	480	M8–M16
RC6-225-1-600	244.5	9.63	16	17	24	15/16	90	160	500	1500	18.8	124.6	1310	1310	1310	1310	1170	940	750	M8–M16
RC6-225-2-600	244.5	9.63	16	17	24	15/16	130	230	500	1500	27.1	179.0	1600	1600	1600	1600	1600	1390	1110	M8–M16
RC6-225-3-600	244.5	9.63	20	20	30	1 3/16	170	220	550	1500	48.0	229.2	2550	2550	2550	2550	2550	2510	2120	M12–M24
RC6-225-4-600	244.5	9.63	24	25	36	1 7/16	170	320	550	1500	58.6	335.8	3660	3660	3660	3660	3660	3660	3200	M12–M36
RC6-225-5-600	244.5	9.63	30	29	45	1 3/4	190	320	600	1100	83.4	259.5	5770	5770	5770	5770	5770	5750	4560	M12–M36
RC6-225-6-600	244.5	9.63	36	41	54	2 1/8	250	300	650	750	135.5	181.1	7620	7620	7620	7620	7620	7620	7420	M20–M64

RC6 PRESSED RISER CLAMP SIX BOLT TYPE

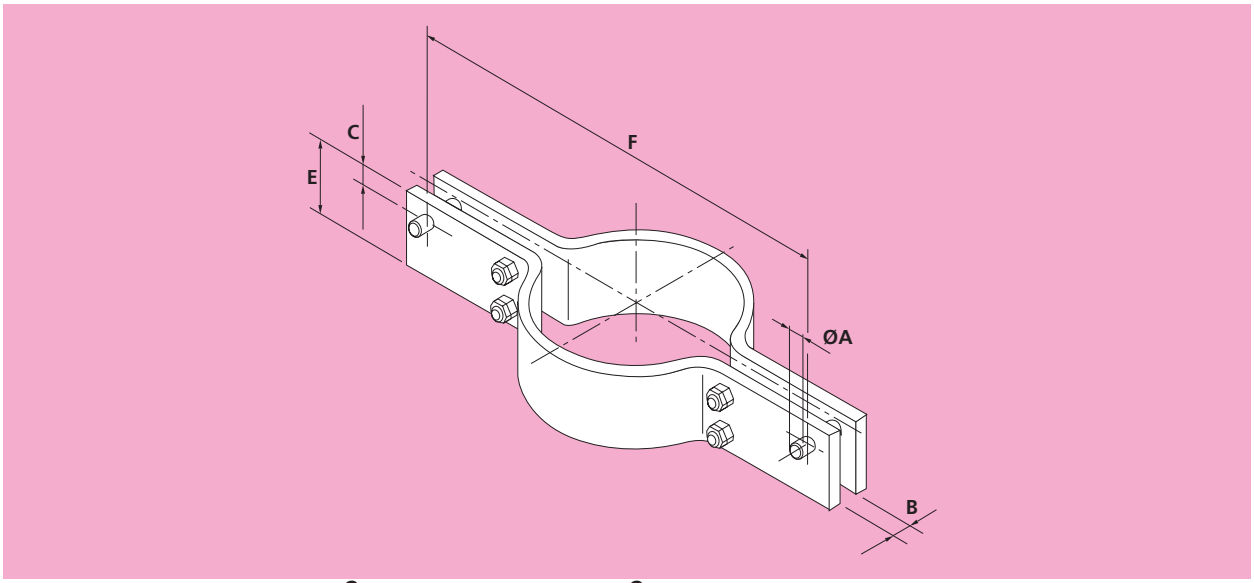

Material: Carbon Steel to 400°C Alloy Steel above 400°C ***Order by Part No. and Rod Centres "F"***

Part Number	Pipe O/D		A	B	C		E		F		Weight kgf		Load Capacity (kgf) at Temperature C							Compatible with Rod Sizes
	mm	in	mm	mm	mm	in	Min.	Max.	Min.	Max.	Min.	Max.	350	400	490	530	560	580	600	
RC6-250-0-400	273	10.75	12	15	18	11/16	80	100	450	1500	8.0	52.3	490	460						M8–M16
RC6-250-1-400	273	10.75	16	17	24	15/16	100	150	500	1500	16.4	79.2	760	720						M8–M16
RC6-250-2-400	273	10.75	16	17	24	15/16	100	150	500	1500	16.4	98.7	1190	1130						M8–M16
RC6-250-3-400	273	10.75	20	20	30	1 3/16	120	190	550	1500	28.4	150.8	2210	2130						M12–M24
RC6-250-4-400	273	10.75	24	25	36	1 7/16	150	210	600	1500	47.8	195.7	3360	3280						M12–M36
RC6-250-5-400	273	10.75	30	29	45	1 3/4	180	220	650	1500	62.5	236.7	4610	4560						M12–M36
RC6-250-6-400	273	10.75	36	41	54	2 1/8	220	320	700	1400	98.6	327.6	7620	7430						M20–M64
RC6-250-7-400	273	10.75	42	45	63	2 1/2	240	320	700	1050	127.7	262.2	10930	10930						M30–M64
RC6-250-0-490	273	10.75	12	15	18	11/16	80	100	450	1500	8.0	52.3	500	500	470	380	260	180	130	M8–M16
RC6-250-1-490	273	10.75	16	17	24	15/16	90	150	500	1500	11.8	79.1	790	790	730	590	380	270	200	M8–M16
RC6-250-2-490	273	10.75	16	17	24	15/16	100	140	500	1500	16.4	92.1	1130	1130	1060	890	630	440	320	M8–M16
RC6-250-3-490	273	10.75	20	20	30	1 3/16	100	180	550	1500	23.6	142.7	2140	2140	2030	1660	1120	780	560	M12–M24
RC6-250-4-490	273	10.75	24	25	36	1 7/16	150	200	550	1500	35.8	186.1	3280	3280	3170	2600	1760	1230	880	M12–M36
RC6-250-5-490	273	10.75	30	29	45	1 3/4	160	280	600	1500	52.3	263.5	4740	4740	4580	3900	2740	1940	1390	M12–M36
RC6-250-6-490	273	10.75	36	41	54	2 1/8	200	320	650	1450	84.0	336.5	7530	7530	7340	6440	4760	3460	2460	M20–M64
RC6-250-7-490	273	10.75	42	45	63	2 1/2	230	310	700	1050	121.7	253.2	10930	10930	10750	9310	7180	5360	3760	M30–M64
RC6-250-0-530	273	10.75	12	15	18	11/16	80	120	500	1500	10.3	62.8	620	620	570	470	310	220	160	M8–M16
RC6-250-1-530	273	10.75	16	17	24	15/16	80	120	500	1500	13.0	78.9	960	960	900	750	530	370	270	M8–M16
RC6-250-2-530	273	10.75	16	17	24	15/16	100	170	500	1500	16.2	111.8	1270	1270	1270	1060	700	490	350	M8–M16
RC6-250-3-530	273	10.75	20	20	30	1 3/16	120	210	550	1500	28.2	166.4	2540	2540	2420	2040	1380	960	690	M12–M24
RC6-250-4-530	273	10.75	24	25	36	1 7/16	140	230	600	1500	44.4	213.8	3660	3660	3660	3190	2370	1670	1200	M12–M36
RC6-250-5-530	273	10.75	30	29	45	1 3/4	190	250	600	1500	61.8	268.3	5470	5470	5340	4700	3310	2340	1680	M12–M36
RC6-250-6-530	273	10.75	36	41	54	2 1/8	230	320	650	1300	96.3	306.7	7620	7620	7620	7400	5540	4030	2860	M20–M64
RC6-250-7-530	273	10.75	42	45	63	2 1/2	270	310	700	950	142.3	233.7	10930	10930	10930	10850	8550	6380	4480	M30–M64
RC6-250-0-560	273	10.75	12	15	18	11/16	80	160	500	1500	12.7	83.6	780	780	780	650	480	380	300	M8–M16
RC6-250-1-560	273	10.75	16	17	24	15/16	100	150	500	1500	16.2	98.5	1220	1220	1150	980	740	590	470	M8–M16
RC6-250-2-560	273	10.75	16	17	24	15/16	100	150	550	1500	23.1	118.0	1600	1600	1600	1440	1120	900	720	M8–M16
RC6-250-3-560	273	10.75	20	20	30	1 3/16	160	190	550	1500	37.4	175.2	2630	2630	2630	2610	2090	1680	1330	M12–M24
RC6-250-4-560	273	10.75	24	25	36	1 7/16	170	280	600	1500	53.5	259.9	3660	3660	3660	3660	3210	2550	2040	M12–M36
RC6-250-5-560	273	10.75	30	29	45	1 3/4	190	290	650	1500	78.0	311.1	6090	6090	6090	5580	4600	3760	2970	M12–M36
RC6-250-6-560	273	10.75	36	41	54	2 1/8	210	310	650	1100	102.1	257.8	7620	7620	7620	7620	7390	6050	4780	M20–M64
RC6-250-7-560	273	10.75	42	45	63	2 1/2	240	320	700	850	144.0	221.1	10930	10930	10930	10930	10710	8770	6920	M30–M64
RC6-250-0-600	273	10.75	12	15	18	11/16	100	150	500	1500	15.8	97.7	780	780	780	780	740	590	470	M8–M16
RC6-250-1-600	273	10.75	16	17	24	15/16	90	160	500	1500	19.2	125.7	1150	1150	1150	1150	1130	970	770	M8–M16
RC6-250-2-600	273	10.75	16	17	24	15/16	120	220	500	1500	25.6	172.8	1530	1530	1530	1530	1510	1380	1090	M8–M16
RC6-250-3-600	273	10.75	20	20	30	1 3/16	160	280	550	1500	46.4	258.0	2630	2630	2630	2630	2630	2590	2050	M12–M24
RC6-250-4-600	273	10.75	24	25	36	1 7/16	180	310	600	1500	67.4	328.0	3660	3660	3660	3660	3660	3660	3180	M12–M36
RC6-250-5-600	273	10.75	30	29	45	1 3/4	200	320	650	1150	95.1	272.7	6090	6090	6090	6090	6090	5830	4620	M12–M36
RC6-250-6-600	273	10.75	36	41	54	2 1/8	260	310	700	800	151.2	199.3	7620	7620	7620	7620	7620	7620	7480	M20–M64

RC6 PRESSED RISER CLAMP SIX BOLT TYPE

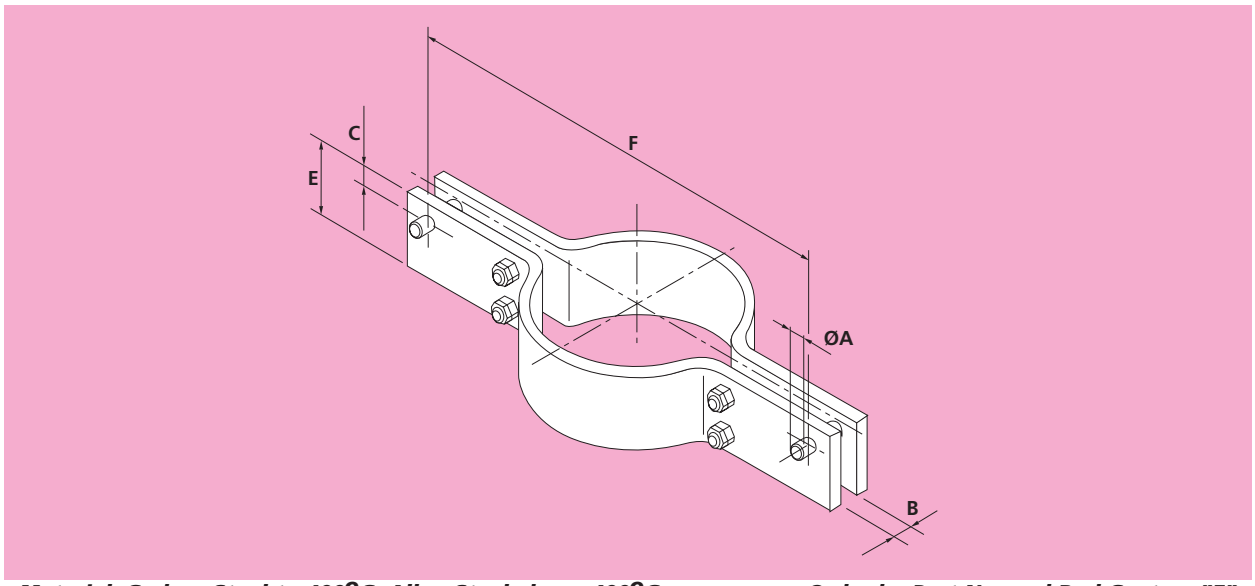

Material: Carbon Steel to 400°C Alloy Steel above 400°C ***Order by Part No. and Rod Centres "F"***

Part Number	Pipe O/D		A	B	C		E		F		Weight kgf		Load Capacity (kgf) at Temperature C							Compatible with Rod Sizes
	mm	in	mm	mm	mm	in	Min.	Max.	Min.	Max.	Min.	Max.	350	400	490	530	560	580	600	
RC6-300-1-400	323.9	12.75	16	17	24	15/16	100	130	550	1900	18.2	107.4	780	750						M8–M16
RC6-300-2-400	323.9	12.75	16	17	24	15/16	120	180	600	1900	23.4	148.7	1110	1060						M8–M16
RC6-300-3-400	323.9	12.75	20	20	30	1 3/16	150	230	650	1850	41.7	223.5	2150	2080						M12–M24
RC6-300-4-400	323.9	12.75	24	25	36	1 7/16	150	260	650	1850	52.4	295.7	3350	3280						M12–M36
RC6-300-5-400	323.9	12.75	30	29	45	1 3/4	190	280	700	1850	72.3	367.7	4750	4700						M12–M36
RC6-300-6-400	323.9	12.75	36	41	54	2 1/8	230	320	750	1450	111.2	342.7	7510	7430						M20–M64
RC6-300-7-400	323.9	12.75	42	45	63	2 1/2	260	320	800	1100	157.1	278.4	10930	10810						M30–M64
RC6-300-8-400	323.9	12.75	48	52	72	2 13/16	300	300	850	850	218.6	218.6	15170	15020						M42–M80
RC6-300-1-490	323.9	12.75	16	17	24	15/16	90	130	550	1900	13.1	107.4	800	800	750	580	380	270	200	M8–M16
RC6-300-2-490	323.9	12.75	16	17	24	15/16	100	180	550	1900	18.2	148.5	1140	1140	1080	910	650	460	330	M8–M16
RC6-300-3-490	323.9	12.75	20	20	30	1 3/16	120	220	600	1850	31.3	213.5	2110	2110	2030	1730	1290	940	670	M12–M24
RC6-300-4-490	323.9	12.75	24	25	36	1 7/16	120	250	650	1850	41.8	284.1	3300	3300	3200	2760	1960	1400	1000	M12–M36
RC6-300-5-490	323.9	12.75	30	29	45	1 3/4	170	270	650	1850	60.5	353.9	4700	4700	4590	4060	2890	2060	1480	M12–M36
RC6-300-6-490	323.9	12.75	36	41	54	2 1/8	220	310	750	1450	105.7	331.3	7470	7470	7310	6340	4730	3460	2450	M20–M64
RC6-300-7-490	323.9	12.75	42	45	63	2 1/2	260	320	800	1100	155.9	277.2	10930	10930	10930	9560	7430	5580	3900	M30–M64
RC6-300-8-490	323.9	12.75	48	52	72	2 13/16	300	320	850	900	217.4	241.6	15280	15280	14930	13200	10670	8180	5690	M42–M80
RC6-300-1-530	323.9	12.75	16	17	24	15/16	100	150	550	1900	18.2	123.8	940	940	890	750	530	380	270	M8–M16
RC6-300-2-530	323.9	12.75	16	17	24	15/16	110	150	550	1900	20.0	148.2	1340	1340	1290	1100	760	530	380	M8–M16
RC6-300-3-530	323.9	12.75	20	20	30	1 3/16	130	200	600	1900	33.7	231.5	2500	2500	2420	2100	1480	1030	740	M12–M24
RC6-300-4-530	323.9	12.75	24	25	36	1 7/16	140	220	650	1850	48.6	285.1	3660	3660	3660	3240	2330	1660	1190	M12–M36
RC6-300-5-530	323.9	12.75	30	29	45	1 3/4	190	310	650	1850	67.5	406.0	5460	5460	5330	4590	3260	2320	1670	M12–M36
RC6-300-6-530	323.9	12.75	36	41	54	2 1/8	190	320	750	1350	106.1	321.8	7620	7620	7620	7340	5750	4320	3020	M20–M64
RC6-300-7-530	323.9	12.75	42	45	63	2 1/2	270	310	750	1000	153.4	249.2	10930	10930	10930	10840	8460	6350	4450	M30–M64
RC6-300-1-560	323.9	12.75	16	17	24	15/16	100	190	550	1900	18.1	156.8	1050	1050	1050	980	750	600	480	M8–M16
RC6-300-2-560	323.9	12.75	16	17	24	15/16	100	180	600	1900	25.5	177.7	1600	1600	1570	1360	1070	860	680	M8–M16
RC6-300-3-560	323.9	12.75	20	20	30	1 3/16	160	240	600	1900	41.3	277.4	2630	2630	2630	2590	2070	1640	1310	M12–M24
RC6-300-4-560	323.9	12.75	24	25	36	1 7/16	180	260	650	1850	62.2	336.8	3660	3660	3660	3660	3250	2670	2110	M12–M36
RC6-300-5-560	323.9	12.75	30	29	45	1 3/4	190	320	700	1650	84.8	378.5	6090	6090	6090	5680	4710	3830	3040	M12–M36
RC6-300-6-560	323.9	12.75	36	41	54	2 1/8	230	310	750	1150	127.9	272.8	7620	7620	7620	7620	7390	6060	4790	M20–M64
RC6-300-7-560	323.9	12.75	42	45	63	2 1/2	270	320	800	900	182.8	236.1	10930	10930	10930	10930	10930	9020	7130	M30–M64
RC6-300-1-600	323.9	12.75	16	17	24	15/16	100	190	600	1900	25.4	187.4	1050	1050	1050	1050	1050	910	730	M8–M16
RC6-300-2-600	323.9	12.75	16	17	24	15/16	140	200	600	1900	35.4	229.8	1480	1480	1480	1480	1480	1390	1100	M8–M16
RC6-300-3-600	323.9	12.75	20	20	30	1 3/16	160	260	600	1900	51.2	342.7	2630	2630	2630	2630	2630	2570	2030	M12–M24
RC6-300-4-600	323.9	12.75	24	25	36	1 7/16	180	320	650	1600	73.9	363.7	3660	3660	3660	3660	3660	3660	3160	M12–M36
RC6-300-5-600	323.9	12.75	30	29	45	1 3/4	210	320	700	1200	108.5	288.0	6090	6090	6090	6090	6090	5880	4640	M12–M36
RC6-300-6-600	323.9	12.75	36	41	54	2 1/8	260	300	750	850	163.8	207.5	7620	7620	7620	7620	7620	7620	7320	M20–M64

RC6 PRESSED RISER CLAMP SIX BOLT TYPE

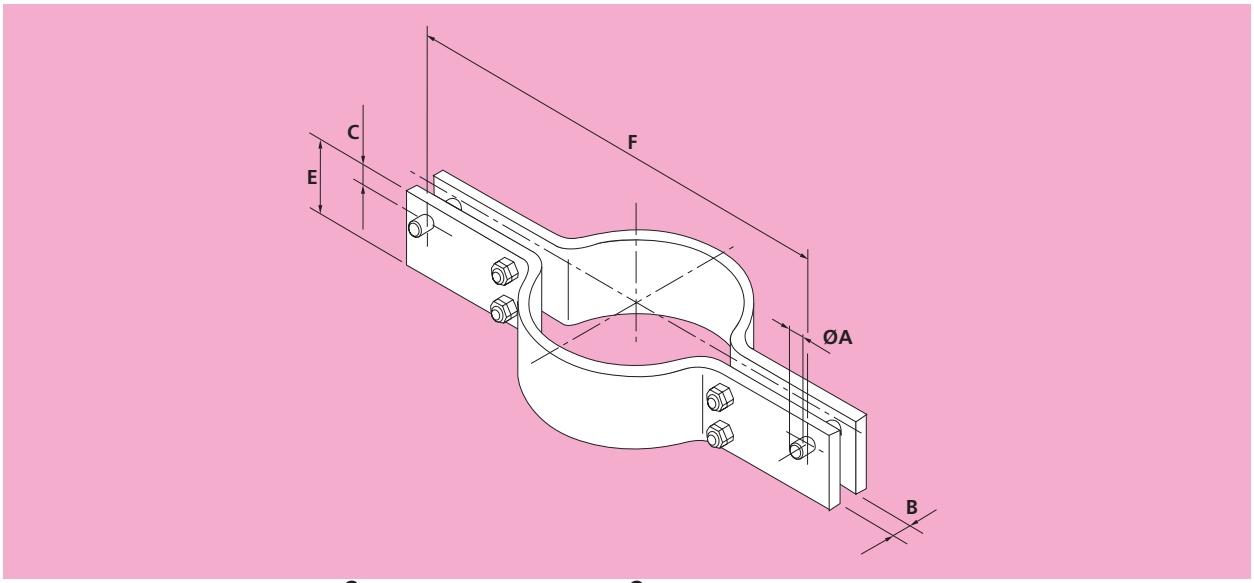

Material: Carbon Steel to 400°C Alloy Steel above 400°C ***Order by Part No. and Rod Centres "F"***

Part Number	Pipe O/D		A	B	C		E		F		Weight kgf		Load Capacity (kgf) at Temperature C							Compatible with Rod Sizes
	mm	in	mm	mm	mm	in	Min.	Max.	Min.	Max.	Min.	Max.	350	400	490	530	560	580	600	
RC6-350-1-400	355.6	14	16	17	24	15/16	120	130	600	1850	23.9	105.9	820	790						M8–M16
RC6-350-2-400	355.6	14	16	17	24	15/16	120	180	600	1850	23.9	146.4	1170	1120						M8–M16
RC6-350-3-400	355.6	14	20	20	30	1 3/16	150	220	650	1850	42.5	215.6	2080	2020						M12–M24
RC6-350-4-400	355.6	14	24	25	36	1 7/16	180	250	700	1850	68.0	287.3	3260	3190						M12–M36
RC6-350-5-400	355.6	14	30	29	45	1 3/4	190	270	750	1850	77.3	357.3	4630	4560						M12–M36
RC6-350-6-400	355.6	14	36	41	54	2 1/8	240	310	800	1450	124.5	336.4	7420	7350						M20–M64
RC6-350-7-400	355.6	14	42	45	63	2 1/2	270	310	850	1100	172.7	272.8	10930	10770						M30–M64
RC6-350-8-400	355.6	14	48	52	72	2 13/16	310	310	900	900	238.4	238.4	15170	15030						M42–M80
RC6-350-1-490	355.6	14	16	17	24	15/16	100	120	600	1850	19.8	97.6	770	770	730	610	440	310	220	M8–M16
RC6-350-2-490	355.6	14	16	17	24	15/16	100	170	600	1850	19.8	138.1	1130	1130	1070	900	630	440	320	M8–M16
RC6-350-3-490	355.6	14	20	20	30	1 3/16	120	220	650	1850	33.9	215.3	2150	2150	2060	1760	1270	880	640	M12–M24
RC6-350-4-490	355.6	14	24	25	36	1 7/16	150	250	700	1850	56.3	286.6	3360	3360	3250	2830	2200	1660	1160	M12–M36
RC6-350-5-490	355.6	14	30	29	45	1 3/4	180	270	700	1850	69.1	356.6	4760	4760	4660	4080	2910	2070	1490	M12–M36
RC6-350-6-490	355.6	14	36	41	54	2 1/8	230	320	800	1500	118.3	356.0	7560	7560	7390	6340	4740	3480	2460	M20–M64
RC6-350-7-490	355.6	14	42	45	63	2 1/2	250	320	800	1150	152.3	290.3	10930	10930	10730	9500	7440	5590	3910	M30–M64
RC6-350-8-490	355.6	14	48	52	72	2 13/16	290	310	850	900	213.1	237.1	15630	15630	15280	13520	10960	8410	5860	M42–M80
RC6-350-1-530	355.6	14	16	17	24	15/16	100	140	600	1850	19.8	113.8	920	920	860	730	520	370	270	M8–M16
RC6-350-2-530	355.6	14	16	17	24	15/16	110	200	600	1850	21.7	162.4	1350	1350	1270	1060	700	490	350	M8–M16
RC6-350-3-530	355.6	14	20	20	30	1 3/16	130	190	650	1850	36.6	216.5	2480	2480	2400	2040	1390	960	700	M12–M24
RC6-350-4-530	355.6	14	24	25	36	1 7/16	150	280	700	1850	56.0	320.5	3660	3660	3660	3190	2380	1700	1220	M12–M36
RC6-350-5-530	355.6	14	30	29	45	1 3/4	200	300	700	1850	76.2	396.0	5340	5340	5220	4570	3260	2320	1670	M12–M36
RC6-350-6-530	355.6	14	36	41	54	2 1/8	200	320	800	1350	118.8	325.0	7620	7620	7620	7460	5820	4370	3060	M20–M64
RC6-350-7-530	355.6	14	42	45	63	2 1/2	280	320	800	1050	170.0	270.2	10930	10930	10930	10790	8410	6320	4420	M30–M64
RC6-350-8-530	355.6	14	48	52	72	2 13/16	320	320	850	850	234.5	234.5	17480	17480	17100	15130	12260	9410	6560	M42–M80
RC6-350-1-560	355.6	14	16	17	24	15/16	100	180	600	1850	19.7	146.2	950	950	950	950	730	580	450	M8–M16
RC6-350-2-560	355.6	14	16	17	24	15/16	100	180	600	1850	26.0	174.9	1600	1600	1600	1430	1130	910	720	M8–M16
RC6-350-3-560	355.6	14	20	20	30	1 3/16	130	230	700	1850	47.9	261.9	2630	2630	2630	2600	2110	1710	1360	M12–M24
RC6-350-4-560	355.6	14	24	25	36	1 7/16	180	250	700	1850	67.0	326.4	3660	3660	3660	3660	3160	2530	2010	M12–M36
RC6-350-5-560	355.6	14	30	29	45	1 3/4	200	320	750	1700	95.9	392.1	6090	6090	6090	5580	4620	3790	3000	M12–M36
RC6-350-6-560	355.6	14	36	41	54	2 1/8	240	320	800	1200	142.1	294.8	7620	7620	7620	7620	7470	6080	4810	M20–M64
RC6-350-7-560	355.6	14	42	45	63	2 1/2	280	320	850	950	201.8	250.1	10930	10930	10930	10930	10720	8790	6950	M30–M64
RC6-350-1-600	355.6	14	16	17	24	15/16	100	180	600	1850	26.0	174.9	1600	1600	1600	1430	1130	910	720	M8–M16
RC6-350-2-600	355.6	14	16	17	24	15/16	130	190	600	1850	33.7	214.9	1600	1600	1600	1600	1600	1390	1100	M8–M16
RC6-350-3-600	355.6	14	20	20	30	1 3/16	170	250	650	1850	58.9	324.4	2630	2630	2630	2630	2630	2590	2050	M12–M24
RC6-350-4-600	355.6	14	24	25	36	1 7/16	190	320	700	1600	84.1	367.2	3660	3660	3660	3660	3660	3660	3200	M12–M36
RC6-350-5-600	355.6	14	30	29	45	1 3/4	220	310	750	1200	121.7	282.1	6090	6090	6090	6090	6090	5900	4660	M12–M36
RC6-350-6-600	355.6	14	36	41	54	2 1/8	270	310	800	900	181.2	227.2	7620	7620	7620	7620	7620	7620	7360	M20–M64

RC6 PRESSED RISER CLAMP SIX BOLT TYPE

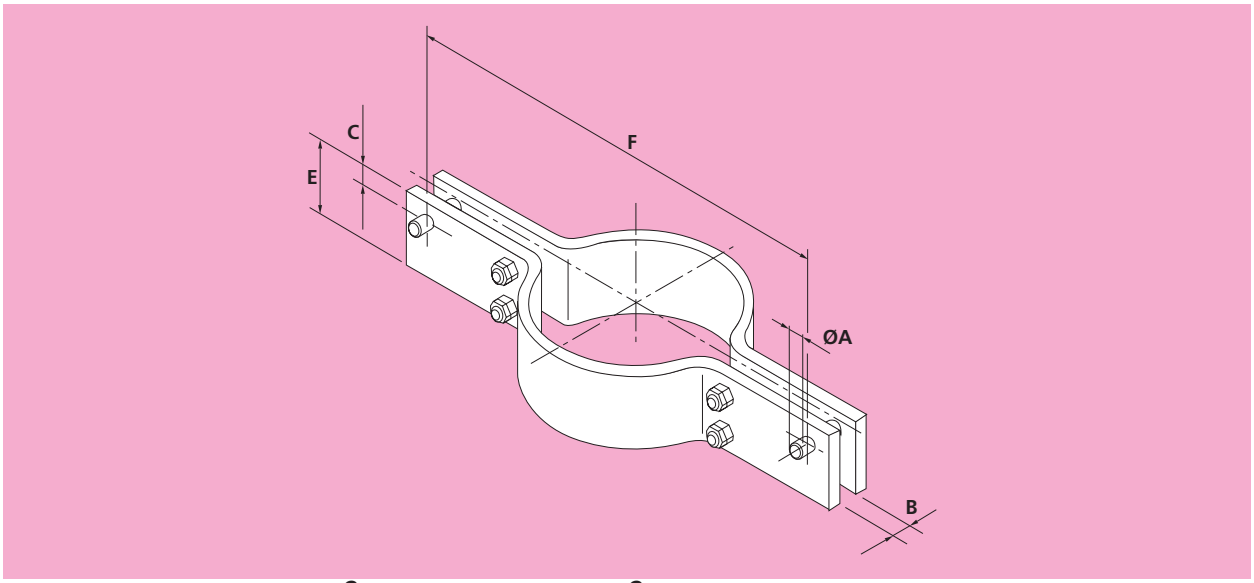

Material: Carbon Steel to 400°C Alloy Steel above 400°C ***Order by Part No. and Rod Centres "F"***

Part Number	Pipe O/D		A	B	C		E		F		Weight kgf		Load Capacity (kgf) at Temperature C							Compatible with Rod Sizes
	mm	in	mm	mm	mm	in	Min.	Max.	Min.	Max.	Min.	Max.	350	400	490	530	560	580	600	
RC6-400-1-400	406.4	16	16	17	24	15/16	120	120	650	1850	26.1	99.1	770	740						M8–M16
RC6-400-2-400	406.4	16	16	17	24	15/16	120	170	650	1850	26.1	140.1	1130	1080						M8–M16
RC6-400-3-400	406.4	16	20	20	30	1 3/16	150	220	750	1850	48.5	218.3	2150	2080						M12–M24
RC6-400-4-400	406.4	16	24	25	36	1 7/16	180	240	750	1800	73.5	272.7	3320	3250						M12–M36
RC6-400-5-400	406.4	16	30	29	45	1 3/4	200	260	800	1800	87.3	340.1	4730	4680						M12–M36
RC6-400-6-400	406.4	16	36	41	54	2 1/8	240	320	850	1500	133.1	362.2	7620	7430						M20–M64
RC6-400-7-400	406.4	16	42	45	63	2 1/2	280	310	900	1150	190.4	287.4	10930	10860						M30–M64
RC6-400-8-400	406.4	16	48	52	72	2 13/16	320	320	950	950	262.9	262.6	15360	15210						M42–M80
RC6-400-1-490	406.4	16	16	17	24	15/16	100	120	650	1850	21.6	98.9	800	800	750	630	450	320	230	M8–M16
RC6-400-2-490	406.4	16	16	17	24	15/16	100	170	650	1850	21.6	139.9	1170	1170	1060	840	550	390	280	M8–M16
RC6-400-3-490	406.4	16	20	20	30	1 3/16	120	220	700	1850	36.8	218.0	2210	2210	2120	1780	1210	840	600	M12–M24
RC6-400-4-490	406.4	16	24	25	36	1 7/16	150	230	750	1800	60.9	260.7	3270	3270	3160	2740	2120	1590	1110	M12–M36
RC6-400-5-490	406.4	16	30	29	45	1 3/4	180	260	750	1800	74.6	339.4	4870	4870	4670	3930	2780	1970	1420	M12–M36
RC6-400-6-490	406.4	16	36	41	54	2 1/8	240	320	850	1550	131.9	371.1	7500	7500	7320	6440	4780	3490	2470	M20–M64
RC6-400-7-490	406.4	16	42	45	63	2 1/2	250	310	850	1150	162.6	286.3	10930	10930	10690	9260	7170	5370	3760	M30–M64
RC6-400-8-490	406.4	16	48	52	72	2 13/16	310	310	950	950	253.0	253.0	15290	15290	14930	13180	10610	8120	5630	M42–M80
RC6-400-1-530	406.4	16	16	17	24	15/16	100	140	650	1850	21.6	115.3	940	940	890	750	530	380	270	M8–M16
RC6-400-2-530	406.4	16	16	17	24	15/16	120	200	700	1850	36.2	164.7	1390	1390	1310	1100	780	550	400	M8–M16
RC6-400-3-530	406.4	16	20	20	30	1 3/16	140	190	700	1850	42.8	219.2	2550	2550	2470	2110	1430	1000	720	M12–M24
RC6-400-4-530	406.4	16	24	25	36	1 7/16	150	270	750	1800	60.9	305.9	3660	3660	3660	3220	2280	1610	1160	M12–M36
RC6-400-5-530	406.4	16	30	29	45	1 3/4	170	290	800	1800	87.9	378.3	5480	5480	5350	4720	3590	2620	1860	M12–M36
RC6-400-6-530	406.4	16	36	41	54	2 1/8	210	320	850	1400	134.1	340.9	7620	7620	7620	7460	5920	4440	3110	M20–M64
RC6-400-7-530	406.4	16	42	45	63	2 1/2	240	320	900	1100	184.9	285.3	10930	10930	10930	10750	8660	6620	4590	M30–M64
RC6-400-1-560	406.4	16	16	17	24	15/16	120	180	650	1850	25.7	148.1	990	990	990	990	760	610	480	M8–M16
RC6-400-2-560	406.4	16	16	17	24	15/16	100	170	650	1850	28.5	167.4	1540	1540	1540	1380	1080	870	690	M8–M16
RC6-400-3-560	406.4	16	20	20	30	1 3/16	130	220	750	1850	51.8	253.7	2630	2630	2630	2540	2050	1660	1320	M12–M24
RC6-400-4-560	406.4	16	24	25	36	1 7/16	190	250	750	1850	76.4	330.5	3660	3660	3660	3660	3220	2570	2050	M12–M36
RC6-400-5-560	406.4	16	30	29	45	1 3/4	200	310	800	1700	103.1	348.8	6090	6090	6090	5540	4570	3700	2940	M12–M36
RC6-400-6-560	406.4	16	36	41	54	2 1/8	250	320	850	1250	158.2	310.7	7620	7620	7620	7620	7380	6040	4770	M20–M64
RC6-400-7-560	406.4	16	42	45	63	2 1/2	290	310	900	950	222.5	247.3	10930	10930	10930	10930	10930	9010	7120	M30–M64
RC6-400-1-600	406.4	16	16	17	24	15/16	100	180	650	1850	28.5	177.2	1540	1540	1540	1460	1150	920	730	M8–M16
RC6-400-2-600	406.4	16	16	17	24	15/16	150	190	650	1850	42.6	217.6	1600	1600	1600	1600	1600	1420	1120	M8–M16
RC6-400-3-600	406.4	16	20	20	30	1 3/16	170	250	700	1850	64.0	328.5	2630	2630	2630	2630	2630	2540	2030	M12–M24
RC6-400-4-600	406.4	16	24	25	36	1 7/16	200	320	750	1650	95.8	382.5	3660	3660	3660	3660	3660	3660	3180	M12–M36
RC6-400-5-600	406.4	16	30	29	45	1 3/4	220	310	800	1250	131.2	297.1	6090	6090	6090	6090	6090	5820	4600	M12–M36
RC6-400-6-600	406.4	16	36	41	54	2 1/8	280	320	850	950	201.1	249.5	7620	7620	7620	7620	7620	7620	7370	M20–M64

RC6 PRESSED RISER CLAMP SIX BOLT TYPE

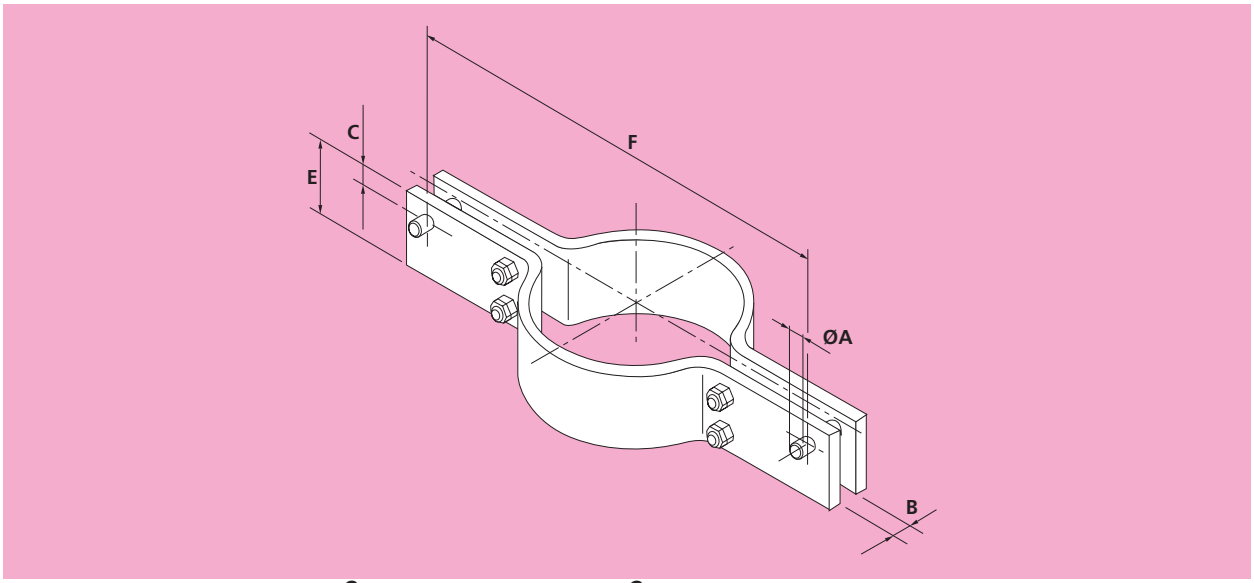

Material: Carbon Steel to 400°C Alloy Steel above 400°C ***Order by Part No. and Rod Centres "F"***

Part Number	Pipe O/D		A	B	C		E		F		Weight kgf		Load Capacity (kgf) at Temperature C							Compatible with Rod Sizes
	mm	in	mm	mm	mm	in	Min.	Max.	Min.	Max.	Min.	Max.	350	400	490	530	560	580	600	
RC6-450-2-400	457.2	18	16	17	24	15/16	120	160	700	1800	28.3	130.5	1140	1100						M8–M16
RC6-450-3-400	457.2	18	20	20	30	1 3/16	150	200	800	1800	52.2	196.5	2080	2020						M12–M24
RC6-450-4-400	457.2	18	24	25	36	1 7/16	180	230	800	1800	79.0	264.8	3290	3220						M12–M36
RC6-450-5-400	457.2	18	30	29	45	1 3/4	200	250	850	1800	93.4	331.4	4680	4580						M12–M36
RC6-450-6-400	457.2	18	36	41	54	2 1/8	220	320	950	1550	156.9	377.7	7600	7530						M20–M64
RC6-450-7-400	457.2	18	42	45	63	2 1/2	280	310	950	1200	203.9	304.0	10930	10730						M30–M64
RC6-450-8-400	457.2	18	48	52	72	2 13/16	320	320	1000	1000	277.9	277.9	15070	14930						M42–M80
RC6-450-2-490	457.2	18	16	17	24	15/16	120	160	700	1800	28.1	130.3	1180	1180	1110	920	610	430	300	M8–M16
RC6-450-3-490	457.2	18	20	20	30	1 3/16	120	200	750	1800	39.8	196.2	2140	2140	2030	1690	1150	800	580	M12–M24
RC6-450-4-490	457.2	18	24	25	36	1 7/16	150	230	800	1800	65.5	264.2	3380	3380	3280	2860	2230	1610	1160	M12–M36
RC6-450-5-490	457.2	18	30	29	45	1 3/4	200	250	850	1800	92.7	331.4	4820	4820	4640	3920	2800	2000	1430	M12–M36
RC6-450-6-490	457.2	18	36	41	54	2 1/8	240	320	900	1600	140.8	386.6	7470	7470	7310	6340	4760	3500	2470	M20–M64
RC6-450-7-490	457.2	18	42	45	63	2 1/2	260	320	900	1250	179.9	320.9	10930	10930	10720	9500	7440	5600	3910	M30–M64
RC6-450-8-490	457.2	18	48	52	72	2 13/16	320	320	1000	1000	276.2	276.2	15520	15520	15190	13460	10940	8410	5880	M42–M80
RC6-450-2-530	457.2	18	16	17	24	15/16	120	180	750	1800	39.2	146.7	1340	1340	1260	1060	760	540	390	M8–M16
RC6-450-3-530	457.2	18	20	20	30	1 3/16	150	230	750	1800	49.5	225.5	2490	2490	2400	2050	1470	1020	740	M12–M24
RC6-450-4-530	457.2	18	24	25	36	1 7/16	160	260	800	1800	69.7	298.4	3660	3660	3660	3260	2430	1730	1240	M12–M36
RC6-450-5-530	457.2	18	30	29	45	1 3/4	180	280	850	1800	100.3	370.8	5460	5460	5340	4730	3790	2790	1970	M12–M36
RC6-450-6-530	457.2	18	36	41	54	2 1/8	210	320	900	1450	143.0	356.4	7620	7620	7620	7500	5890	4430	3100	M20–M64
RC6-450-7-530	457.2	18	42	45	63	2 1/2	250	320	950	1150	204.5	300.8	10930	10930	10930	10930	8890	6840	4780	M30–M64
RC6-450-2-560	457.2	18	16	17	24	15/16	110	160	700	1800	34.0	155.8	1490	1490	1490	1390	1100	890	710	M8–M16
RC6-450-3-560	457.2	18	20	20	30	1 3/16	130	210	800	1800	55.8	239.6	2630	2630	2630	2610	2090	1670	1330	M12–M24
RC6-450-4-560	457.2	18	24	25	36	1 7/16	190	230	800	1800	82.2	301.1	3660	3660	3660	3660	3180	2540	2020	M12–M36
RC6-450-5-560	457.2	18	30	29	45	1 3/4	210	320	850	1800	115.9	422.7	6090	6090	6090	5520	4590	3760	2980	M12–M36
RC6-450-6-560	457.2	18	36	41	54	2 1/8	250	320	900	1300	169.6	326.2	7620	7620	7620	7620	7470	6090	4820	M20–M64
RC6-450-7-560	457.2	18	42	45	63	2 1/2	290	310	950	1000	236.5	262.3	10930	10930	10930	10930	10920	8970	7100	M30–M64
RC6-450-2-600	457.2	18	16	17	24	15/16	160	240	700	1800	49.3	233.6	1600	1600	1600	1600	1600	1370	1100	M8–M16
RC6-450-3-600	457.2	18	20	20	30	1 3/16	180	230	750	1800	73.3	299.0	2470	2470	2470	2470	2470	2470	2040	M12–M24
RC6-450-4-600	457.2	18	24	25	36	1 7/16	200	320	800	1700	103.0	398.0	3660	3660	3660	3660	3660	3660	3210	M12–M36
RC6-450-5-600	457.2	18	30	29	45	1 3/4	220	310	850	1300	140.6	312.1	6090	6090	6090	6090	6090	5780	4570	M12–M36
RC6-450-6-600	457.2	18	36	41	54	2 1/8	280	320	900	1000	214.6	265.0	7620	7620	7620	7620	7620	7620	7350	M20–M64

RC6 PRESSED RISER CLAMP SIX BOLT TYPE

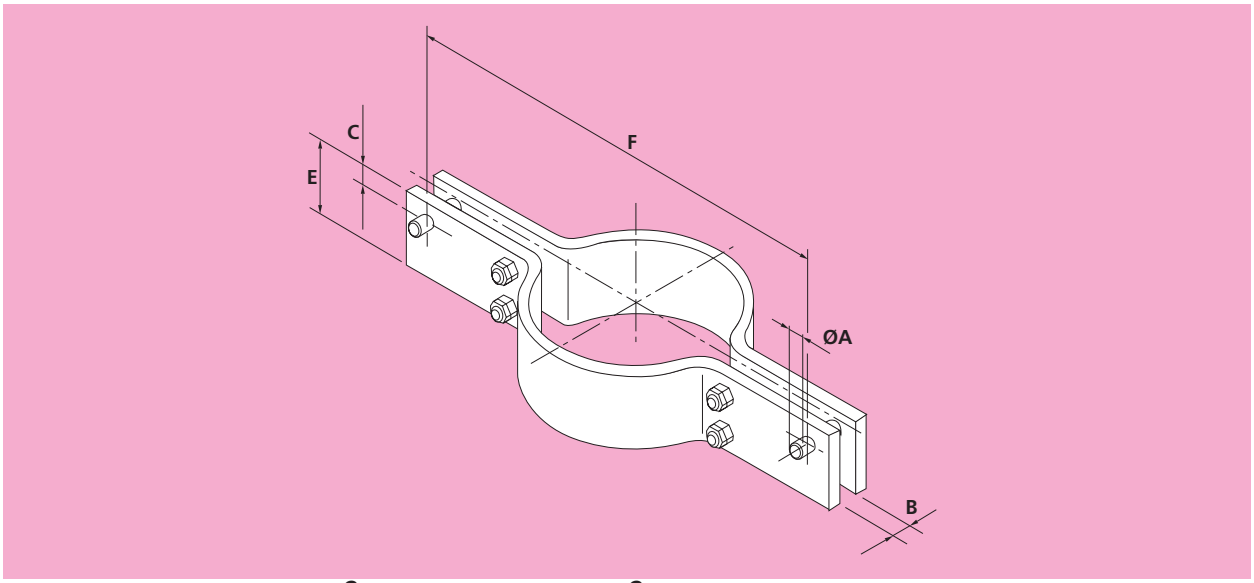

Material: Carbon Steel to 400°C Alloy Steel above 400°C ***Order by Part No. and Rod Centres "F"***

Part Number	Pipe O/D		A	B	C		E		F		Weight kgf		Load Capacity (kgf) at Temperature C							Compatible with Rod Sizes
	mm	in	mm	mm	mm	in	Min.	Max.	Min.	Max.	Min.	Max.	350	400	490	530	560	580	600	
RC6-500-2-400	508	20	16	17	24	15/16	150	150	800	1800	52.8	124.4	1110	1060						M8–M16
RC6-500-3-400	508	20	20	20	30	1 3/16	180	190	850	1750	83.5	185.4	2130	2080						M12–M24
RC6-500-4-400	508	20	24	25	36	1 7/16	180	210	850	1750	84.5	239.5	3220	3170						M12–M36
RC6-500-5-400	508	20	30	29	45	1 3/4	220	230	950	1750	136.2	302.7	4620	4580						M12–M36
RC6-500-6-400	508	20	36	41	54	2 1/8	220	320	1000	1600	166.2	393.2	7600	7530						M20–M64
RC6-500-7-400	508	20	42	45	63	2 1/2	260	310	1050	1250	236.0	319.0	10930	10930						M30–M64
RC6-500-2-490	508	20	16	17	24	15/16	120	150	800	1800	42.1	124.1	1140	1140	1080	920	660	480	340	M8–M16
RC6-500-3-490	508	20	20	20	30	1 3/16	140	190	800	1750	49.7	184.7	2200	2200	2120	1810	1250	870	630	M12–M24
RC6-500-4-490	508	20	24	25	36	1 7/16	150	210	850	1750	70.1	238.8	3320	3320	3220	2820	2230	1610	1150	M12–M36
RC6-500-5-490	508	20	30	29	45	1 3/4	180	230	900	1750	106.8	301.7	4760	4760	4670	4160	3410	2630	1850	M12–M36
RC6-500-6-490	508	20	36	41	54	2 1/8	190	320	950	1650	137.8	402.1	7470	7470	7320	6520	5230	3960	2760	M20–M64
RC6-500-7-490	508	20	42	45	63	2 1/2	280	320	1000	1300	214.2	337.9	10930	10930	10720	9370	7400	5600	3900	M30–M64
RC6-500-8-490	508	20	48	52	72	2 13/16	320	320	1050	1050	291.7	291.7	15230	15230	14940	13300	10900	8420	5930	M42–M80
RC6-500-2-530	508	20	16	17	24	15/16	120	180	800	1800	42.1	148.8	1390	1390	1320	1120	810	580	420	M8–M16
RC6-500-3-530	508	20	20	20	30	1 3/16	160	210	800	1750	56.7	204.1	2450	2450	2360	2020	1440	1000	730	M12–M24
RC6-500-4-530	508	20	24	25	36	1 7/16	160	240	850	1750	74.6	272.7	3660	3660	3660	3260	2410	1730	1240	M12–M36
RC6-500-5-530	508	20	30	29	45	1 3/4	180	260	900	1750	106.8	340.8	5450	5450	5340	4750	3770	2790	1960	M12–M36
RC6-500-6-530	508	20	36	41	54	2 1/8	210	320	950	1500	151.9	371.9	7620	7620	7620	7410	5850	4430	3090	M20–M64
RC6-500-7-530	508	20	42	45	63	2 1/2	250	320	1000	1200	217.8	317.5	10930	10930	10930	10930	8960	6920	4880	M30–M64
RC6-500-2-560	508	20	16	17	24	15/16	120	150	800	1800	41.9	148.2	1450	1450	1450	1360	1080	870	690	M8–M16
RC6-500-3-560	508	20	20	20	30	1 3/16	130	200	850	1800	59.8	231.3	2480	2480	2480	2480	2040	1640	1300	M12–M24
RC6-500-4-560	508	20	24	25	36	1 7/16	200	280	850	1750	92.6	317.9	3660	3660	3660	3660	3170	2590	2050	M12–M36
RC6-500-5-560	508	20	30	29	45	1 3/4	210	300	900	1750	123.5	392.1	5960	5960	5960	5610	4690	3830	3040	M12–M36
RC6-500-6-560	508	20	36	41	54	2 1/8	250	310	950	1350	180.2	331.1	7620	7620	7620	7620	7320	6020	4780	M20–M64
RC6-500-7-560	508	20	42	45	63	2 1/2	290	310	1000	1050	250.6	277.3	10930	10930	10930	10930	10850	8920	7090	M30–M64
RC6-500-2-600	508	20	16	17	24	15/16	110	230	800	1800	47.7	227.0	1330	1330	1330	1330	1330	1330	1080	M8–M16
RC6-500-3-600	508	20	20	20	30	1 3/16	200	220	800	1800	87.5	289.9	2450	2450	2450	2450	2450	2450	2090	M12–M24
RC6-500-4-600	508	20	24	25	36	1 7/16	200	310	850	1750	110.4	400.9	3660	3660	3660	3660	3660	3660	3160	M12–M36
RC6-500-5-600	508	20	30	29	45	1 3/4	230	320	900	1400	156.7	347.7	6090	6090	6090	6090	6090	5840	4650	M12–M36
RC6-500-6-600	508	20	36	41	54	2 1/8	300	320	1000	1050	254.5	281.3	7620	7620	7620	7620	7620	7620	7340	M20–M64

RC6 PRESSED RISER CLAMP SIX BOLT TYPE

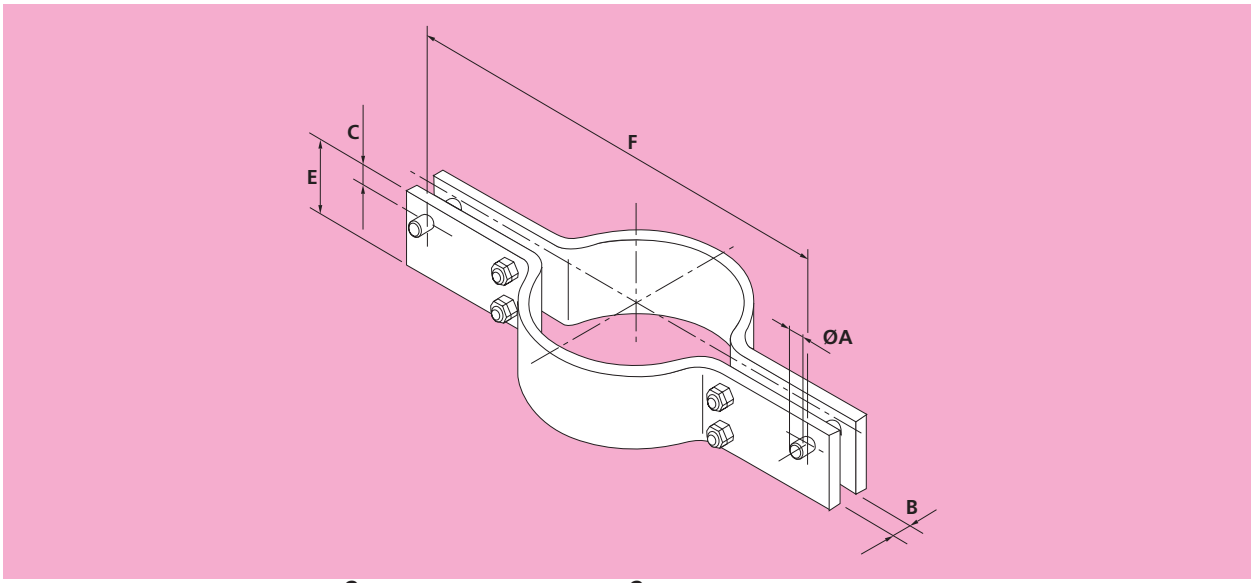

Material: Carbon Steel to 400°C Alloy Steel above 400°C ***Order by Part No. and Rod Centres "F"***

Part Number	Pipe O/D		A	B	C		E		F		Weight kgf		Load Capacity (kgf) at Temperature C							Compatible with Rod Sizes
	mm	in	mm	mm	mm	in	Min.	Max.	Min.	Max.	Min.	Max.	350	400	490	530	560	580	600	
RC6-550-3-400	558.8	22	20	20	30	1 3/16	180	180	900	1750	89.0	178.1	2100	2040						M12–M24
RC6-550-4-400	558.8	22	24	25	36	1 7/16	220	220	950	1750	136.6	255.0	3530	3470						M12–M36
RC6-550-5-400	558.8	22	30	29	45	1 3/4	260	260	1050	1750	205.3	347.6	5510	5460						M12–M36
RC6-550-6-400	558.8	22	36	41	54	2 1/8	260	320	1050	1650	208.1	410.0	7590	7520						M20–M64
RC6-550-7-400	558.8	22	42	45	63	2 1/2	260	310	1100	1300	248.4	333.8	10930	10870						M30–M64
RC6-550-3-490	558.8	22	20	20	30	1 3/16	150	180	850	1750	56.9	177.5	2160	2160	2080	1770	1210	840	610	M12–M24
RC6-550-4-490	558.8	22	24	25	36	1 7/16	150	200	900	1750	74.6	230.4	3280	3280	3180	2770	2020	1440	1030	M12–M36
RC6-550-5-490	558.8	22	30	29	45	1 3/4	180	270	950	1700	113.4	307.2	4760	4760	4620	4020	3160	2380	1660	M12–M36
RC6-550-6-490	558.8	22	36	41	54	2 1/8	220	320	1050	1700	175.5	418.5	7460	7460	7300	6480	5280	4070	2850	M20–M64
RC6-550-7-490	558.8	22	42	45	63	2 1/2	230	320	1050	1350	211.8	352.9	10930	10930	10770	9560	7790	6000	4200	M30–M64
RC6-550-3-530	558.8	22	20	20	30	1 3/16	150	210	900	1750	73.8	206.9	2550	2550	2460	2100	1580	1170	820	M12–M24
RC6-550-4-530	558.8	22	24	25	36	1 7/16	170	230	900	1750	84.4	264.8	3660	3660	3660	3210	2310	1660	1180	M12–M36
RC6-550-5-530	558.8	22	30	29	45	1 3/4	180	250	950	1750	113.4	332.0	5440	5440	5330	4730	3630	2670	1890	M12–M36
RC6-550-6-530	558.8	22	36	41	54	2 1/8	230	320	1050	1550	183.3	388.3	7620	7620	7620	7370	5780	4360	3040	M20–M64
RC6-550-7-530	558.8	22	42	45	63	2 1/2	260	320	1050	1250	238.7	332.8	10930	10930	10930	10740	8760	6740	4720	M30–M64
RC6-550-3-560	558.8	22	20	20	30	1 3/16	150	180	900	1750	73.5	206.0	2590	2590	2590	2490	2020	1650	1310	M12–M24
RC6-550-4-560	558.8	22	24	25	36	1 7/16	160	280	950	1750	98.5	322.1	3660	3660	3660	3660	3280	2680	2120	M12–M36
RC6-550-5-560	558.8	22	30	29	45	1 3/4	210	290	950	1750	131.2	384.7	5380	5380	5380	5380	4580	3700	2930	M12–M36
RC6-550-6-560	558.8	22	36	41	54	2 1/8	260	320	1000	1400	198.3	357.0	7620	7620	7620	7620	7480	6090	4820	M20–M64
RC6-550-7-560	558.8	22	42	45	63	2 1/2	300	320	1050	1100	274.6	302.6	10930	10930	10930	10930	10910	8960	7110	M30–M64
RC6-550-3-600	558.8	22	20	20	30	1 3/16	150	270	900	1750	87.6	308.6	2600	2600	2600	2600	2600	2570	2030	M12–M24
RC6-550-4-600	558.8	22	24	25	36	1 7/16	220	310	900	1750	129.4	406.2	3660	3660	3660	3660	3660	3660	3160	M12–M36
RC6-550-5-600	558.8	22	30	29	45	1 3/4	230	320	950	1450	166.4	363.1	5920	5920	5920	5920	5920	5790	4590	M12–M36
RC6-550-6-600	558.8	22	36	41	54	2 1/8	310	310	1050	1050	277.7	277.7	7620	7620	7620	7620	7620	7620	7380	M20–M64
RC6-600-3-400	609.6	24	20	20	30	1 3/16	180	180	950	1700	94.5	176.2	2300	2240						M12–M24
RC6-600-4-400	609.6	24	24	25	36	1 7/16	220	220	1000	1700	144.7	252.3	3660	3660						M12–M36
RC6-600-5-400	609.6	24	30	29	45	1 3/4	260	260	1100	1700	216.5	302.3	4660	4590						M12–M36
RC6-600-6-400	609.6	24	36	41	54	2 1/8	260	320	1100	1700	219.3	425.7	7600	7530						M20–M64
RC6-600-7-400	609.6	24	42	45	63	2 1/2	290	310	1150	1350	292.5	351.0	10810	10720						M30–M64
RC6-600-3-490	609.6	24	20	20	30	1 3/16	160	170	900	1700	64.6	165.9	2230	2230	2090	1750	1210	840	610	M12–M24
RC6-600-4-490	609.6	24	24	25	36	1 7/16	180	190	1000	1700	99.1	217.4	3400	3400	3310	2900	2290	1650	1180	M12–M36
RC6-600-5-490	609.6	24	30	29	45	1 3/4	180	260	1000	1700	120.1	299.9	4800	4800	4670	4090	3240	2450	1710	M12–M36
RC6-600-6-490	609.6	24	36	41	54	2 1/8	220	310	1100	1700	185.0	411.0	7570	7570	7420	6620	5440	4160	2900	M20–M64
RC6-600-7-490	609.6	24	42	45	63	2 1/2	250	320	1150	1400	249.9	368.6	10930	10930	10740	9570	7870	6080	4300	M30–M64
RC6-600-3-530	609.6	24	20	20	30	1 3/16	150	190	950	1700	78.4	185.3	2520	2520	2430	2080	1590	1170	830	M12–M24
RC6-600-4-530	609.6	24	24	25	36	1 7/16	190	210	950	1700	100.0	240.0	3660	3660	3660	3230	2430	1750	1250	M12–M36
RC6-600-5-530	609.6	24	30	29	45	1 3/4	180	230	1000	1700	120.1	302.4	5450	5450	5350	4600	3500	2590	1820	M12–M36
RC6-600-6-530	609.6	24	36	41	54	2 1/8	240	310	1100	1600	201.4	391.5	7620	7620	7620	7330	6020	4580	3190	M20–M64
RC6-600-7-530	609.6	24	42	45	63	2 1/2	280	310	1150	1250	279.2	328.0	10930	10930	10930	10910	8970	6930	4900	M30–M64
RC6-600-3-560	609.6	24	20	20	30	1 3/16	160	230	950	1700	83.2	224.1	2520	2520	2520	2520	2070	1670	1330	M12–M24
RC6-600-4-560	609.6	24	24	25	36	1 7/16	180	250	1000	1700	118.0	285.4	3660	3660	3660	3660	3230	2640	2090	M12–M36
RC6-600-5-560	609.6	24	30	29	45	1 3/4	220	260	1000	1700	146.2	341.6	6090	6090	6090	5510	4610	3730	2960	M12–M36
RC6-600-6-560	609.6	24	36	41	54	2 1/8	260	310	1050	1450	209.5	361.2	7620	7620	7620	7620	7390	6050	4790	M20–M64
RC6-600-7-560	609.6	24	42	45	63	2 1/2	320	320	1150	1150	318.3	318.3	10930	10930	10930	10930	10840	8920	7100	M30–M64
RC6-600-3-600	609.6	24	20	20	30	1 3/16	160	250	950	1700	99.3	282.7	2530	2530	2530	2530	2530	2530	2050	M12–M24
RC6-600-4-600	609.6	24	24	25	36	1 7/16	240	280	950	1700	149.9	363.1	3660	3660	3660	3660	3660	3660	3220	M12–M36
RC6-600-5-600	609.6	24	30	29	45	1 3/4	250	320	1050	1500	198.3	379.6	5840	5840	5840	5840	5840	5800	4590	M12–M36
RC6-600-6-600	609.6	24	36	41	54	2 1/8	310	310	1100	1100	292.9	292.2	7620	7620	7620	7620	7620	7620	7360	M20–M64

RC6 PRESSED RISER CLAMP SIX BOLT TYPE

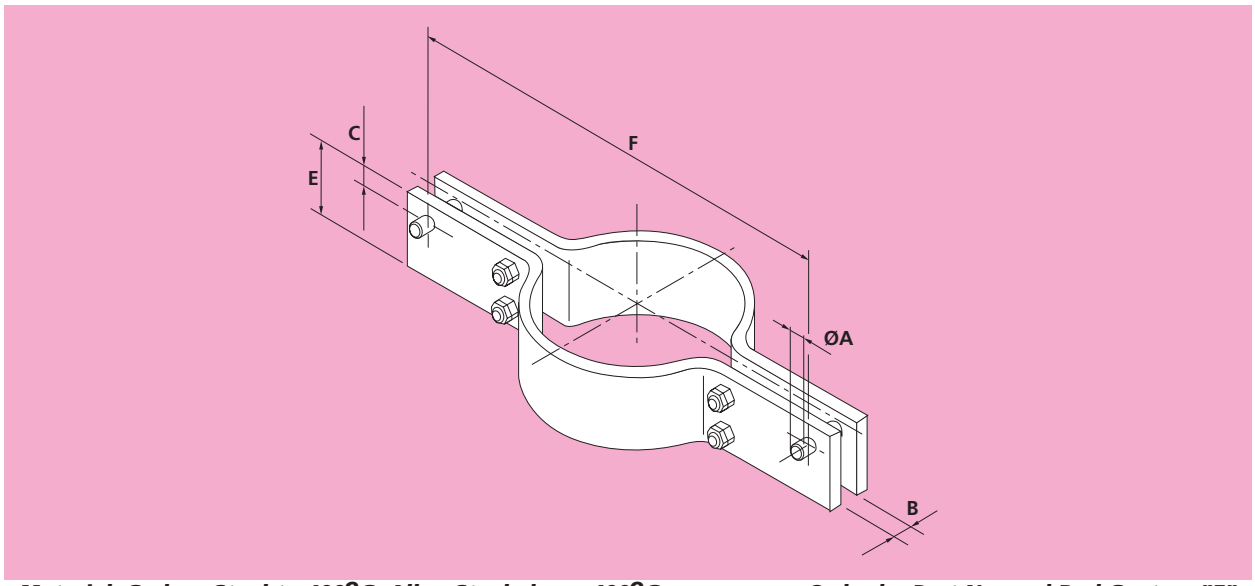

Material: Carbon Steel to 400°C Alloy Steel above 400°C ***Order by Part No. and Rod Centres "F"***

Part Number	Pipe O/D		A	B	C		E		F		Weight kgf		Load Capacity (kgf) at Temperature C							Compatible with Rod Sizes
	mm	in	mm	mm	mm	in	Min.	Max.	Min.	Max.	Min.	Max.	350	400	490	530	560	580	600	
RC6-650-3-400	660.4	26	20	20	30	1 3/16	180	180	1000	1700	100.0	178.6	2420	2350						M12–M24
RC6-650-4-400	660.4	26	24	25	36	1 7/16	220	240	1050	1700	152.7	239.9	3310	3220						M12–M36
RC6-650-5-400	660.4	26	30	29	45	1 3/4	260	260	1150	1650	227.5	299.0	5160	5080						M12–M36
RC6-650-6-400	660.4	26	36	41	54	2 1/8	290	290	1200	1650	301.8	383.9	7580	7510						M20–M64
RC6-650-7-400	660.4	26	42	45	63	2 1/2	290	320	1200	1400	306.3	377.3	10930	10920						M30–M64
RC6-650-3-490	660.4	26	20	20	30	1 3/16	150	160	1000	1700	83.0	158.3	2190	2190	2110	1810	1360	1010	710	M12–M24
RC6-650-4-490	660.4	26	24	25	36	1 7/16	180	240	1050	1700	104.6	238.9	3410	3410	3290	2810	2090	1500	1070	M12–M36
RC6-650-5-490	660.4	26	30	29	45	1 3/4	180	240	1050	1650	126.6	274.0	4880	4880	4740	4130	3200	2360	1660	M12–M36
RC6-650-6-490	660.4	26	36	41	54	2 1/8	220	280	1150	1650	194.3	367.5	7510	7510	7360	6540	5310	4010	2800	M20–M64
RC6-650-7-490	660.4	26	42	45	63	2 1/2	250	310	1200	1400	261.8	362.3	10930	10930	10750	9550	7810	6020	4230	M30–M64
RC6-650-3-530	660.4	26	20	20	30	1 3/16	150	180	1000	1700	83.0	178.0	2490	2490	2400	2060	1550	1150	810	M12–M24
RC6-650-4-530	660.4	26	24	25	36	1 7/16	200	200	1000	1700	111.4	231.7	3660	3660	3660	3210	2340	1680	1200	M12–M36
RC6-650-5-530	660.4	26	30	29	45	1 3/4	200	270	1050	1650	140.4	307.9	5540	5540	5380	4700	3590	2650	1870	M12–M36
RC6-650-6-530	660.4	26	36	41	54	2 1/8	240	310	1150	1650	211.5	406.4	7620	7620	7620	7300	5850	4420	3080	M20–M64
RC6-650-7-530	660.4	26	42	45	63	2 1/2	280	320	1200	1300	292.6	353.7	10930	10930	10930	10830	8850	6820	4800	M30–M64
RC6-650-3-560	660.4	26	20	20	30	1 3/16	170	220	1000	1700	93.6	217.3	2460	2460	2460	2460	2050	1660	1320	M12–M24
RC6-650-4-560	660.4	26	24	25	36	1 7/16	180	240	1050	1700	124.5	277.6	3660	3660	3660	3660	3230	2630	2080	M12–M36
RC6-650-5-560	660.4	26	30	29	45	1 3/4	240	240	1050	1650	168.0	311.9	6090	6090	6090	5570	4640	3750	2980	M12–M36
RC6-650-6-560	660.4	26	36	41	54	2 1/8	270	320	1100	1500	228.8	389.1	7620	7620	7620	7620	7490	6100	4830	M20–M64
RC6-650-3-600	660.4	26	20	20	30	1 3/16	180	240	1000	1700	118.2	275.0	2620	2620	2620	2620	2620	2620	2080	M12–M24
RC6-650-4-600	660.4	26	24	25	36	1 7/16	190	270	1050	1700	151.5	354.8	3660	3660	3660	3660	3660	3660	3240	M12–M36
RC6-650-5-600	660.4	26	30	29	45	1 3/4	260	320	1100	1550	217.2	394.9	5580	5580	5580	5580	5580	5580	4590	M12–M36
RC6-650-6-600	660.4	26	36	41	54	2 1/8	320	320	1150	1150	317.6	317.6	7620	7620	7620	7620	7620	7620	7370	M20–M64
RC6-700-3-400	711.2	28	20	20	30	1 3/16	180	200	1050	1650	105.6	164.3	2120	2030						M12–M24
RC6-700-4-400	711.2	28	24	25	36	1 7/16	220	220	1100	1650	160.8	217.9	3370	3270						M12–M36
RC6-700-5-400	711.2	28	30	29	45	1 3/4	260	260	1200	1650	238.6	303.0	5470	5360						M12–M36
RC6-700-6-400	711.2	28	36	41	54	2 1/8	290	290	1250	1650	315.9	388.8	7620	7620						M20–M64
RC6-700-3-490	711.2	28	20	20	30	1 3/16	180	200	1050	1650	105.6	164.3	2180	2180	2060	1740	1240	890	640	M12–M24
RC6-700-4-490	711.2	28	24	25	36	1 7/16	180	210	1100	1650	110.1	207.1	3300	3300	3170	2680	1920	1370	980	M12–M36
RC6-700-5-490	711.2	28	30	29	45	1 3/4	180	230	1100	1650	133.2	266.2	4770	4770	4590	3910	2940	2160	1530	M12–M36
RC6-700-6-490	711.2	28	36	41	54	2 1/8	220	270	1200	1650	203.6	359.1	7620	7620	7480	6580	5150	3880	2710	M20–M64
RC6-700-7-490	711.2	28	42	45	63	2 1/2	260	320	1250	1450	286.2	390.9	10930	10930	10930	9690	7880	6050	4230	M30–M64
RC6-700-3-530	711.2	28	20	20	30	1 3/16	150	170	1050	1650	87.6	166.3	2610	2610	2510	2140	1560	1110	800	M12–M24
RC6-700-4-530	711.2	28	24	25	36	1 7/16	180	180	1100	1650	131.1	206.5	3660	3660	3640	3170	2480	1870	1300	M12–M36
RC6-700-5-530	711.2	28	30	29	45	1 3/4	210	260	1100	1650	155.0	300.6	5630	5630	5420	4630	3470	2550	1800	M12–M36
RC6-700-6-530	711.2	28	36	41	54	2 1/8	250	300	1200	1650	230.7	398.5	7620	7620	7620	7430	5920	4460	3120	M20–M64
RC6-700-7-530	711.2	28	42	45	63	2 1/2	290	320	1250	1350	318.4	370.7	10930	10930	10930	10810	8790	6750	4720	M30–M64
RC6-700-3-560	711.2	28	20	20	30	1 3/16	180	200	1050	1650	104.6	195.4	2420	2420	2420	2420	2050	1650	1310	M12–M24
RC6-700-4-560	711.2	28	24	25	36	1 7/16	190	220	1100	1650	137.6	252.0	3660	3660	3660	3660	3240	2640	2090	M12–M36
RC6-700-5-560	711.2	28	30	29	45	1 3/4	190	230	1150	1650	168.1	303.0	5990	5990	5990	5610	4650	3800	3010	M12–M36
RC6-700-6-560	711.2	28	36	41	54	2 1/8	230	320	1200	1550	241.5	404.6	7620	7620	7620	7620	7380	6050	4790	M20–M64
RC6-700-3-600	711.2	28	20	20	30	1 3/16	190	220	1050	1650	131.7	249.5	2560	2560	2560	2560	2560	2560	2090	M12–M24
RC6-700-4-600	711.2	28	24	25	36	1 7/16	200	240	1100	1650	168.0	312.0	3660	3660	3660	3660	3660	3660	3160	M12–M36
RC6-700-5-600	711.2	28	30	29	45	1 3/4	280	320	1150	1600	245.8	410.6	5550	5550	5550	5550	5550	5550	4580	M12–M36

RC6 PRESSED RISER CLAMP SIX BOLT TYPE

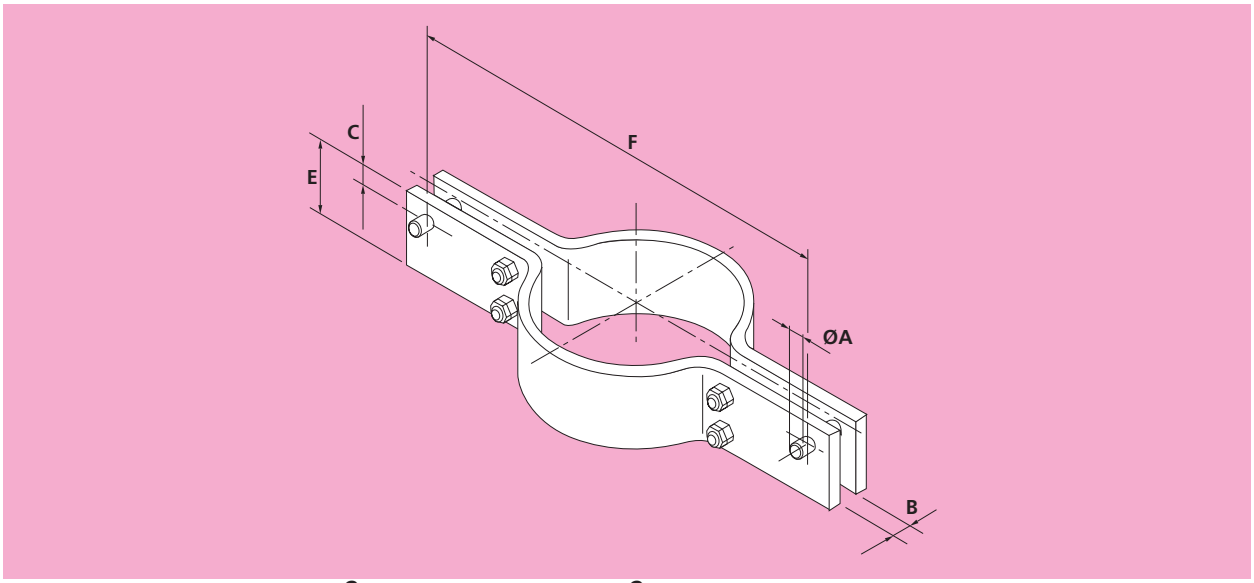

Material: Carbon Steel to 400°C Alloy Steel above 400°C ***Order by Part No. and Rod Centres "F"***

Part Number	Pipe O/D		A	B	C		E		F		Weight kgf		Load Capacity (kgf) at Temperature C							Compatible with Rod Sizes
	mm	in	mm	mm	mm	in	Min.	Max.	Min.	Max.	Min.	Max.	350	400	490	530	560	580	600	
RC6-750-4-400	762.0	30	24	25	36	1 7/16	220	220	1200	1600	174.2	215.7	3660	3650						M12–M36
RC6-750-5-400	762.0	30	30	29	45	1 3/4	260	260	1250	1600	249.8	299.9	6020	5920						M12–M36
RC6-750-6-400	762.0	30	36	41	54	2 1/8	290	290	1300	1600	330.3	385.0	7620	7620						M20–M64
RC6-750-4-490	762.0	30	24	25	36	1 7/16	200	190	1150	1600	128.3	185.7	3290	3290	3170	2720	2040	1470	1050	M12–M36
RC6-750-5-490	762.0	30	30	29	45	1 3/4	200	210	1150	1600	155.2	240.7	4900	4900	4770	4120	3120	2310	1630	M12–M36
RC6-750-6-490	762.0	30	36	41	54	2 1/8	220	250	1250	1600	213.0	329.5	7530	7530	7320	6400	5050	3830	2670	M20–M64
RC6-750-7-490	762.0	30	42	45	63	2 1/2	260	320	1300	1500	299.0	406.5	10930	10930	10810	9620	7890	6090	4290	M30–M64
RC6-750-4-530	762.0	30	24	25	36	1 7/16	180	220	1150	1600	137.8	214.7	3660	3660	3660	3190	2420	1790	1260	M12–M36
RC6-750-5-530	762.0	30	30	29	45	1 3/4	220	230	1150	1600	170.5	263.4	5420	5420	5270	4560	3460	2560	1800	M12–M36
RC6-750-6-530	762.0	30	36	41	54	2 1/8	250	280	1250	1600	241.5	368.5	7620	7620	7620	7350	5810	4400	3060	M20–M64
RC6-750-7-530	762.0	30	42	45	63	2 1/2	290	320	1300	1400	332.6	386.4	10930	10930	10930	10720	8790	6780	4780	M30–M64
RC6-750-4-560	762.0	30	24	25	36	1 7/16	200	210	1150	1650	152.9	243.8	3660	3660	3660	3660	3280	2660	2110	M12–M36
RC6-750-5-560	762.0	30	30	29	45	1 3/4	200	280	1200	1600	185.4	320.2	5840	5840	5840	5710	4660	3800	3010	M12–M36
RC6-750-6-560	762.0	30	36	41	54	2 1/8	230	320	1250	1600	252.9	420.5	7620	7620	7620	7620	7370	6060	4820	M20–M64
RC6-750-4-600	762.0	30	24	25	36	1 7/16	220	230	1150	1650	194.1	303.1	3660	3660	3660	3660	3660	3660	3200	M12–M36
RC6-750-5-600	762.0	30	30	29	45	1 3/4	230	310	1200	1600	242.0	403.3	6090	6090	6090	6090	6090	5860	4650	M12–M36
RC6-800-4-400	812.8	32	24	25	36	1 7/16	260	260	1250	1600	250.7	300.7	3660	3660						M12–M36
RC6-800-5-400	812.8	32	30	29	45	1 3/4	260	260	1300	1600	261.1	304.0	6090	6090						M12–M36
RC6-800-6-400	812.8	32	36	41	54	2 1/8	290	290	1350	1600	344.5	390.1	7620	7620						M20–M64
RC6-800-4-490	812.8	32	24	25	36	1 7/16	180	190	1200	1600	144.5	188.3	3400	3400	3290	2830	2170	1610	1130	M12–M36
RC6-800-5-490	812.8	32	30	29	45	1 3/4	210	220	1250	1600	175.5	256.6	4910	4910	4750	4090	3130	2330	1640	M12–M36
RC6-800-6-490	812.8	32	36	41	54	2 1/8	240	240	1300	1600	242.4	320.8	7560	7560	7430	6620	5280	4020	2790	M20–M64
RC6-800-7-490	812.8	32	42	45	63	2 1/2	270	320	1350	1550	323.6	422.4	10880	10880	10690	9560	7900	6130	4350	M30–M64
RC6-800-4-530	812.8	32	24	25	36	1 7/16	180	210	1200	1600	144.5	207.9	3660	3660	3660	3160	2420	1800	1270	M12–M36
RC6-800-5-530	812.8	32	30	29	45	1 3/4	240	220	1250	1600	200.2	256.6	5350	5350	5210	4570	3610	2690	1890	M12–M36
RC6-800-6-530	812.8	32	36	41	54	2 1/8	270	270	1300	1600	272.2	360.3	7620	7620	7620	7520	5990	4560	3170	M20–M64
RC6-800-7-530	812.8	32	42	45	63	2 1/2	290	310	1350	1400	347.0	380.2	10930	10930	10930	10760	8890	6900	4900	M30–M64
RC6-800-4-560	812.8	32	24	25	36	1 7/16	210	190	1200	1600	168.3	218.6	3660	3660	3660	3660	3220	2630	2080	M12–M36
RC6-800-5-560	812.8	32	30	29	45	1 3/4	210	270	1250	1600	203.7	313.1	5720	5720	5720	5680	4660	3810	3010	M12–M36
RC6-800-6-560	812.8	32	36	41	54	2 1/8	240	310	1300	1600	275.5	413.0	7620	7620	7620	7620	7420	6110	4870	M20–M64
RC6-800-4-600	812.8	32	24	25	36	1 7/16	230	280	1200	1600	212.9	320.5	3660	3660	3660	3660	3660	3660	3190	M12–M36
RC6-800-5-600	812.8	32	30	29	45	1 3/4	230	300	1250	1600	253.3	395.6	6090	6090	6090	6090	6090	5720	4560	M12–M36

RC6 PRESSED RISER CLAMP SIX BOLT TYPE

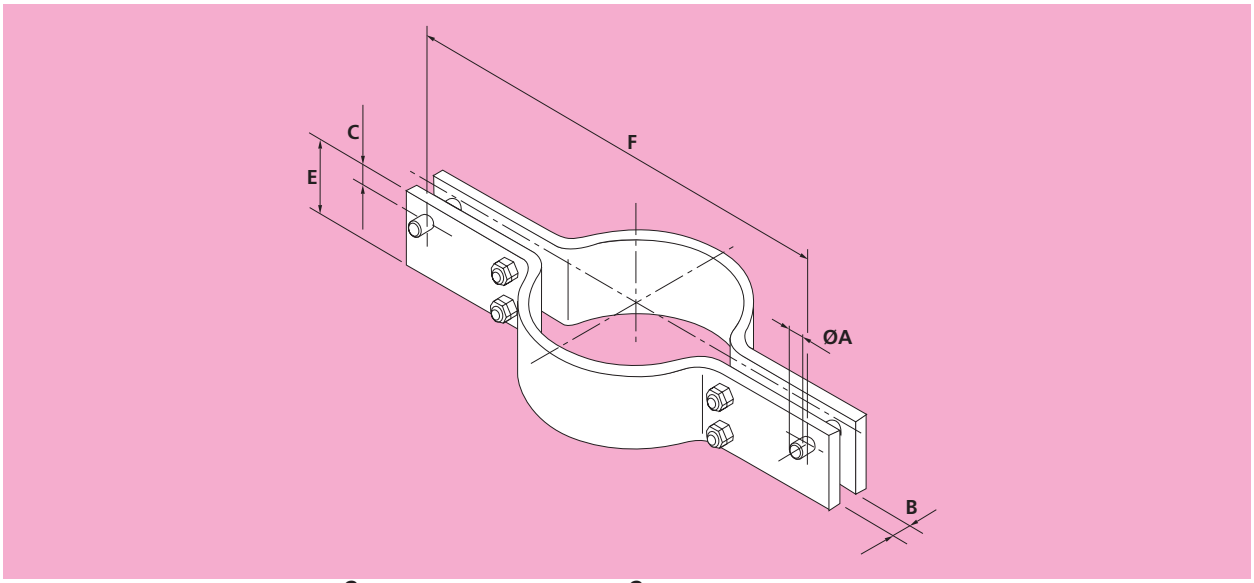

Material: Carbon Steel to 400°C Alloy Steel above 400°C ***Order by Part No. and Rod Centres "F"***

Part Number	Pipe O/D		A	B	C		E		F		Weight kgf		Load Capacity (kgf) at Temperature C							Compatible with Rod Sizes
	mm	in	mm	mm	mm	in	Min.	Max.	Min.	Max.	Min.	Max.	350	400	490	530	560	580	600	
RC6-850-4-400	863.6	34	24	25	36	1 7/16	260	260	1350	1550	269.0	297.6	3660	3660						M12–M36
RC6-850-5-400	863.6	34	30	29	45	1 3/4	260	260	1350	1550	272.1	300.7	6090	6090						M12–M36
RC6-850-6-400	863.6	34	36	41	54	2 1/8	290	290	1400	1550	358.5	385.9	7620	7620						M20–M64
RC6-850-4-490	863.6	34	24	25	36	1 7/16	180	180	1250	1550	151.2	176.6	3490	3490	3370	2890	2200	1630	1150	M12–M36
RC6-850-5-490	863.6	34	30	29	45	1 3/4	220	240	1300	1550	191.8	237.4	4790	4790	4620	3960	3020	2240	1570	M12–M36
RC6-850-6-490	863.6	34	36	41	54	2 1/8	250	280	1350	1550	263.1	324.9	7580	7580	7370	6450	5110	3880	2700	M20–M64
RC6-850-7-490	863.6	34	42	45	63	2 1/2	280	310	1400	1550	348.9	414.7	10900	10900	10700	9530	7840	6060	4280	M30–M64
RC6-850-4-530	863.6	34	24	25	36	1 7/16	180	200	1250	1550	151.2	196.0	3660	3660	3660	3220	2450	1820	1280	M12–M36
RC6-850-5-530	863.6	34	30	29	45	1 3/4	220	220	1300	1550	223.6	253.8	5820	5820	5670	4960	3930	2980	2070	M12–M36
RC6-850-6-530	863.6	34	36	41	54	2 1/8	280	260	1350	1550	294.1	344.9	7620	7620	7620	7330	5800	4400	3060	M20–M64
RC6-850-7-530	863.6	34	42	45	63	2 1/2	310	320	1400	1450	385.5	407.8	10930	10930	10930	10870	8940	6910	4880	M30–M64
RC6-850-4-560	863.6	34	24	25	36	1 7/16	220	240	1250	1550	184.3	234.8	3660	3660	3660	3660	3200	2590	2050	M12–M36
RC6-850-5-560	863.6	34	30	29	45	1 3/4	220	250	1300	1550	222.6	286.9	5620	5620	5620	5610	4580	3740	2960	M12–M36
RC6-850-6-560	863.6	34	36	41	54	2 1/8	260	290	1350	1550	310.7	382.4	7620	7620	7620	7620	7500	6170	4910	M20–M64
RC6-850-4-600	863.6	34	24	25	36	1 7/16	240	260	1250	1550	232.4	294.6	3660	3660	3660	3660	3660	3660	3180	M12–M36
RC6-850-5-600	863.6	34	30	29	45	1 3/4	250	280	1300	1550	287.3	365.5	6090	6090	6090	6090	6090	5850	4660	M12–M36
RC6-900-4-400	914.4	36	24	25	36	1 7/16	260	260	1400	1550	280.3	301.7	3660	3660						M12–M36
RC6-900-5-400	914.4	36	30	29	45	1 3/4	260	260	1400	1550	283.4	304.9	6090	6090						M12–M36
RC6-900-6-400	914.4	36	36	41	54	2 1/8	290	290	1450	1500	372.9	382.0	7620	7620						M20–M64
RC6-900-4-490	914.4	36	24	25	36	1 7/16	180	180	1300	1550	157.9	179.1	3630	3630	3510	3030	2330	1740	1220	M12–M36
RC6-900-5-490	914.4	36	30	29	45	1 3/4	230	230	1350	1500	209.0	225.3	4800	4800	4640	4000	3080	2290	1610	M12–M36
RC6-900-6-490	914.4	36	36	41	54	2 1/8	260	270	1400	1500	284.6	310.2	7490	7490	7300	6420	5130	3910	2720	M20–M64
RC6-900-7-490	914.4	36	42	45	63	2 1/2	290	290	1450	1500	375.5	384.6	10890	10890	10710	9590	7950	6170	4390	M30–M64
RC6-900-4-530	914.4	36	24	25	36	1 7/16	190	190	1300	1550	166.5	188.9	3660	3660	3660	3220	2470	1840	1290	M12–M36
RC6-900-5-530	914.4	36	30	29	45	1 3/4	220	220	1400	1550	239.2	257.3	6060	6060	5910	5190	4150	3160	2200	M12–M36
RC6-900-6-530	914.4	36	36	41	54	2 1/8	260	260	1450	1500	333.3	341.4	7620	7620	7620	7620	7020	5450	3880	M20–M64
RC6-900-4-560	914.4	36	24	25	36	1 7/16	230	230	1300	1550	201.2	228.3	3660	3660	3660	3660	3220	2610	2070	M12–M36
RC6-900-5-560	914.4	36	30	29	45	1 3/4	230	240	1350	1550	242.6	279.4	5530	5530	5530	5530	4590	3760	2970	M12–M36
RC6-900-6-560	914.4	36	36	41	54	2 1/8	270	270	1400	1500	335.8	352.8	7620	7620	7620	7620	7500	6180	4930	M20–M64
RC6-900-4-600	914.4	36	24	25	36	1 7/16	250	250	1300	1550	252.9	287.3	3660	3660	3660	3660	3660	3660	3210	M12–M36
RC6-900-5-600	914.4	36	30	29	45	1 3/4	260	260	1400	1550	319.8	344.3	6090	6090	6090	6090	6090	5770	4610	M12–M36

RC6 PRESSED RISER CLAMP SIX BOLT TYPE

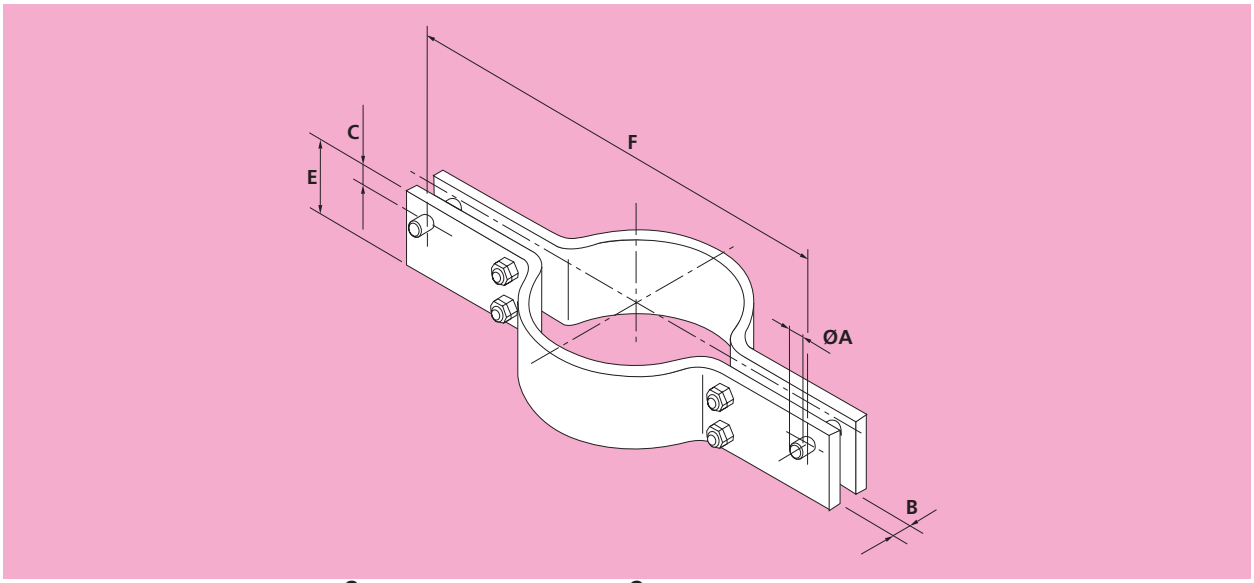

Material: Carbon Steel to 400°C Alloy Steel above 400°C ***Order by Part No. and Rod Centres "F"***

Part Number	Pipe O/D		A	B	C		E		F		Weight kgf		Load Capacity (kgf) at Temperature C							Compatible with Rod Sizes
	mm	in	mm	mm	mm	in	Min.	Max.	Min.	Max.	Min.	Max.	350	400	490	530	560	580	600	
RC6-950-4-400	965.2	38	24	25	36	1 7/16	260	260	1450	1500	291.4	298.6	3660	3660						M12–M36
RC6-950-5-400	965.2	38	30	29	45	1 3/4	290	290	1500	1500	383.9	383.9	6090	6090						M12–M36
RC6-950-6-400	965.2	38	36	41	54	2 1/8	290	290	1500	1500	387.2	387.2	7620	7620						M20–M64
RC6-950-4-490	965.2	38	24	25	36	1 7/16	180	180	1350	1500	164.6	177.3	3470	3470	3360	2910	2260	1700	1190	M12–M36
RC6-950-5-490	965.2	38	30	29	45	1 3/4	240	240	1400	1500	226.9	238.3	4760	4760	4610	4000	3110	2330	1630	M12–M36
RC6-950-6-490	965.2	38	36	41	54	2 1/8	280	280	1450	1500	318.3	326.0	7620	7620	7490	6620	5350	4100	2850	M20–M64
RC6-950-7-490	965.2	38	42	45	63	2 1/2	310	310	1500	1500	416.1	416.1	10930	10930	10910	9810	8220	6410	4610	M30–M64
RC6-950-4-530	965.2	38	24	25	36	1 7/16	200	200	1350	1500	182.6	196.8	3660	3660	3660	3270	2540	1910	1330	M12–M36
RC6-950-5-530	965.2	38	30	29	45	1 3/4	220	220	1450	1500	248.8	254.8	5800	5800	5670	5010	4050	3100	2160	M12–M36
RC6-950-6-530	965.2	38	36	41	54	2 1/8	260	260	1500	1500	346.0	346.0	7620	7620	7620	7620	6760	5270	3790	M20–M64
RC6-950-4-560	965.2	38	24	25	36	1 7/16	240	240	1350	1500	218.8	235.7	3660	3660	3660	3660	3250	2640	2090	M12–M36
RC6-950-5-560	965.2	38	30	29	45	1 3/4	240	240	1400	1500	263.4	276.6	5440	5440	5440	5440	4610	3780	2980	M12–M36
RC6-950-6-560	965.2	38	36	41	54	2 1/8	280	280	1500	1500	370.6	370.6	7620	7620	7620	7620	7480	6180	4950	M20–M64
RC6-950-4-600	965.2	38	24	25	36	1 7/16	260	260	1400	1500	282.0	296.3	3660	3660	3660	3660	3660	3660	3230	M12–M36
RC6-950-5-600	965.2	38	30	29	45	1 3/4	270	270	1450	1500	345.3	353.3	6090	6090	6090	6090	6090	5840	4680	M12–M36
RC6-1000-4-400	1016	40	24	25	36	1 7/16	260	260	1500	1500	302.6	302.6	3660	3660						M12–M36
RC6-1000-4-490	1016.0	40	24	25	36	1 7/16	180	180	1400	1500	171.2	179.7	3300	3300	3190	2760	2130	1590	1110	M12–M36
RC6-1000-4-530	1016.0	40	24	25	36	1 7/16	210	210	1400	1500	199.4	209.3	3660	3660	3660	3260	2510	1880	1320	M12–M36
RC6-1000-4-560	1016.0	40	24	25	36	1 7/16	190	190	1450	1500	214.7	220.0	3660	3660	3660	3660	3350	2740	2160	M12–M36
RC6-1000-5-560	1016.0	40	30	29	45	1 3/4	260	260	1450	1450	296.3	296.3	5590	5590	5590	5590	4740	3880	3060	M12–M36
RC6-1000-4-600	1016.0	40	24	25	36	1 7/16	270	270	1450	1500	304.3	311.7	3660	3660	3660	3660	3660	3660	3170	M12–M36
RC6-1000-5-600	1016.0	40	30	29	45	1 3/4	280	280	1500	1500	371.7	371.7	6030	6030	6030	6030	6030	5720	4570	M12–M36

FPR RISER CLAMP FLAT PLATE TYPE

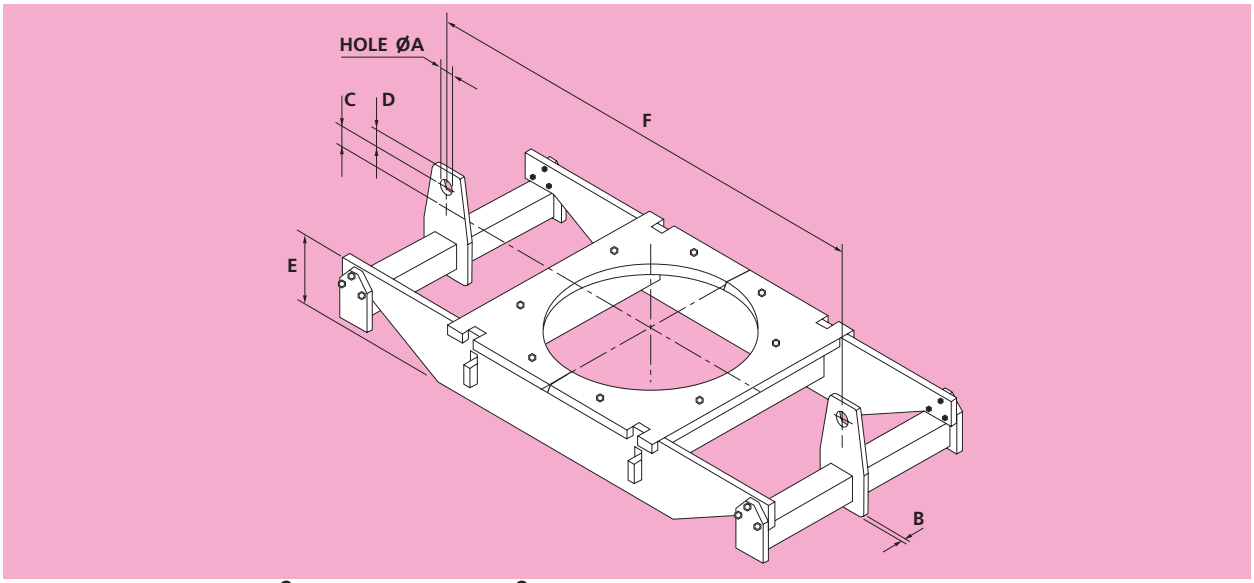

Material: Carbon Steel to 400°C Alloy Steel above 400°C End Beams and Lugs: Carbon Steel. Order by Part No. and Rod Centres "F"

Part Number	Pipe O/D		A	B	C		D	E		F		Weight kgf		Load Capacity (kgf) at Temperature C							Compatible with Rod Sizes
	mm	in	mm	mm	mm	in	mm	Min.	Max.	Min.	Max.	Min.	Max.	350	400	490	530	560	580	600	
FPR-250-0-400	273.0	10.75	14	6	-78	-3 1/16	20	158	158	500	2000	30.0	53.4	460	460						M8–M12
FPR-250-1-400	273.0	10.75	18	6	-66	-2 5/8	30	158	158	500	2000	30.2	63.2	720	720						M8–M16
FPR-250-2-400	273.0	10.75	18	8	-66	-2 5/8	30	158	158	500	2000	30.3	71.4	1060	1060						M8–M16
FPR-250-3-400	273.0	10.75	26	10	-48	-1 7/8	45	158	160	500	2000	30.6	108.5	2020	2020						M8–M24
FPR-250-4-400	273.0	10.75	33	10	-38	-1 1/2	55	158	190	500	2000	30.8	124.9	3160	3160						M8–M30
FPR-250-5-400	273.0	10.75	39	12	-28	-1 1/8	65	168	200	500	2000	35.5	167.0	4560	4560						M12–M36
FPR-250-6-400	273.0	10.75	52	15	-3	-1/8	85	188	250	600	2000	53.3	210.5	7300	7300						M20–M48
FPR-250-7-400	273.0	10.75	60	20	12	1/2	100	188	280	600	2000	71.5	281.3	10680	10680						M24–M56
FPR-250-8-400	273.0	10.75	68	25	32	1 1/4	115	208	300	700	2000	118.6	363.5	14800	14800						M36–M64
FPR-250-0-490	273.0	10.75	14	6	-78	-3 1/16	20	158	158	500	2000	30.0	53.4	460	460	460	300	180	130	110	M8–M12
FPR-250-1-490	273.0	10.75	18	6	-66	-2 5/8	30	158	158	500	2000	30.2	63.2	720	720	720	470	280	200	170	M8–M16
FPR-250-2-490	273.0	10.75	18	8	-66	-2 5/8	30	158	158	500	2000	30.3	71.4	1060	1060	1060	690	410	300	250	M8–M16
FPR-250-3-490	273.0	10.75	26	10	-48	-1 7/8	45	158	158	500	2000	30.6	103.0	2020	2020	2020	1310	790	570	480	M8–M24
FPR-250-4-490	273.0	10.75	33	10	-38	-1 1/2	55	158	190	500	2000	30.8	124.9	3160	3160	3160	2050	1230	880	760	M8–M30
FPR-250-5-490	273.0	10.75	39	12	-28	-1 1/8	65	168	200	500	2000	35.5	167.0	4560	4560	4560	2960	1780	1280	1090	M12–M36
FPR-250-6-490	273.0	10.75	52	15	-3	-1/8	85	188	250	600	2000	53.3	210.5	7300	7300	7300	4750	2850	2040	1750	M20–M48
FPR-250-7-490	273.0	10.75	60	20	12	1/2	100	188	270	600	2000	71.5	272.9	10680	10680	10680	6940	4170	2990	2560	M24–M56
FPR-250-8-490	273.0	10.75	68	25	32	1 1/4	115	208	300	700	2000	118.6	363.5	14800	14800	14800	9620	5770	4140	3550	M36–M64
FPR-250-0-530	273.0	10.75	14	6	-78	-3 1/16	20	158	158	500	2000	30.0	56.7	460	460	460	460	280	200	170	M8–M12
FPR-250-1-530	273.0	10.75	18	6	-66	-2 5/8	30	158	158	500	2000	30.2	71.3	720	720	720	720	430	320	260	M8–M16
FPR-250-2-530	273.0	10.75	18	8	-66	-2 5/8	30	158	158	500	2000	30.3	79.5	1060	1060	1060	1060	640	470	380	M8–M16
FPR-250-3-530	273.0	10.75	26	10	-48	-1 7/8	45	158	170	500	2000	30.6	113.8	2020	2020	2020	2020	1210	890	730	M8–M24
FPR-250-4-530	273.0	10.75	33	10	-38	-1 1/2	55	158	180	500	2000	30.8	148.6	3160	3160	3160	3160	1900	1390	1140	M8–M30
FPR-250-5-530	273.0	10.75	39	12	-28	-1 1/8	65	168	220	600	2000	45.0	180.8	4560	4560	4560	4560	2740	2010	1640	M12–M36
FPR-250-6-530	273.0	10.75	52	15	-3	-1/8	85	188	240	600	2000	67.3	243.5	7300	7300	7300	7300	4380	3210	2630	M20–M48
FPR-250-7-530	273.0	10.75	60	20	12	1/2	100	188	300	600	2000	73.6	298.0	10680	10680	10680	10680	6410	4700	3840	M24–M56
FPR-250-8-530	273.0	10.75	68	25	32	1 1/4	115	208	320	700	2000	121.8	383.2	14800	14800	14800	14800	8880	6510	5330	M36–M64
FPR-250-0-560	273.0	10.75	14	6	-78	-3 1/16	20	158	158	500	2000	30.0	67.2	460	460	460	460	460	360	270	M8–M12
FPR-250-1-560	273.0	10.75	18	6	-66	-2 5/8	30	158	158	500	2000	30.2	75.4	720	720	720	720	720	560	420	M8–M16
FPR-250-2-560	273.0	10.75	18	8	-66	-2 5/8	30	158	158	500	2000	30.3	97.2	1060	1060	1060	1060	1060	830	610	M8–M16
FPR-250-3-560	273.0	10.75	26	10	-48	-1 7/8	45	158	190	500	2000	30.6	124.7	2020	2020	2020	2020	2020	1580	1170	M8–M24
FPR-250-4-560	273.0	10.75	33	10	-38	-1 1/2	55	158	210	500	2000	34.6	169.0	3160	3160	3160	3160	3160	2460	1830	M8–M30
FPR-250-5-560	273.0	10.75	39	12	-28	-1 1/8	65	168	240	600	2000	46.6	194.5	4560	4560	4560	4560	4560	3560	2640	M12–M36
FPR-250-6-560	273.0	10.75	52	15	-3	-1/8	85	188	280	600	2000	69.6	279.4	7300	7300	7300	7300	7300	5690	4230	M20–M48
FPR-250-7-560	273.0	10.75	60	20	12	1/2	100	200	300	600	2000	83.9	346.6	10680	10680	10680	10680	10680	8330	6190	M24–M56
FPR-250-8-560	273.0	10.75	68	25	32	1 1/4	115	230	350	700	2000	131.2	412.6	14800	14800	14800	14800	14800	11540	8580	M36–M64
FPR-250-0-600	273.0	10.75	14	6	-78	-3 1/16	20	158	158	500	2000	30.0	75.3	460	460	460	460	460	460	460	M8–M12
FPR-250-1-600	273.0	10.75	18	6	-66	-2 5/8	30	158	158	500	2000	30.2	102.5	720	720	720	720	720	720	720	M8–M16
FPR-250-2-600	273.0	10.75	18	8	-66	-2 5/8	30	158	180	500	2000	30.3	119.0	1060	1060	1060	1060	1060	1060	1060	M8–M16
FPR-250-3-600	273.0	10.75	26	10	-48	-1 7/8	45	158	210	500	2000	34.5	168.8	2020	2020	2020	2020	2020	2020	2020	M8–M24
FPR-250-4-600	273.0	10.75	33	10	-38	-1 1/2	55	158	250	500	2000	41.0	196.3	3160	3160	3160	3160	3160	3160	3160	M8–M30
FPR-250-5-600	273.0	10.75	39	12	-28	-1 1/8	65	168	270	600	2000	62.0	260.2	4560	4560	4560	4560	4560	4560	4560	M12–M36
FPR-250-6-600	273.0	10.75	52	15	-3	-1/8	85	188	310	600	2000	94.1	354.2	7300	7300	7300	7300	7300	7300	7300	M20–M48
FPR-250-7-600	273.0	10.75	60	20	12	1/2	100	220	340	600	2000	111.1	441.6	10680	10680	10680	10680	10680	10680	10680	M24–M56
FPR-250-8-600	273.0	10.75	68	25	32	1 1/4	115	260	400	700	2000	169.7	532.9	14800	14800	14800	14800	14800	14800	14800	M36–M64

FPR RISER CLAMP FLAT PLATE TYPE

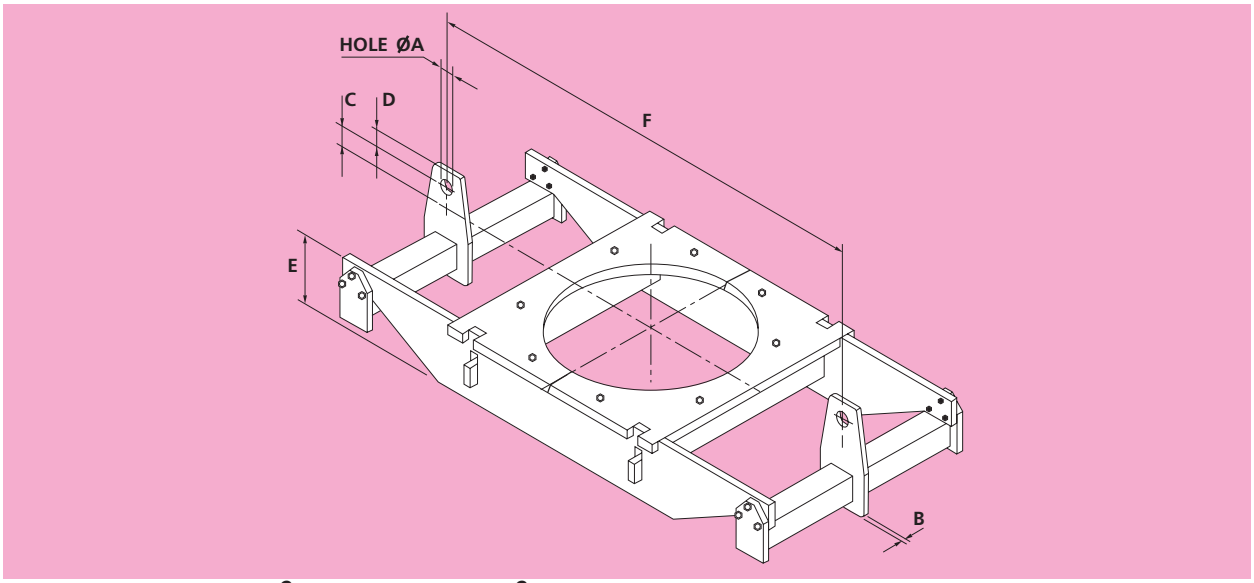

Material: Carbon Steel to 400°C Alloy Steel above 400°C End Beams and Lugs: Carbon Steel. Order by Part No. and Rod Centres "F"

Part Number	Pipe O/D		A	B	C		D	E		F		Weight kgf		Load Capacity (kgf) at Temperature C							Compatible with Rod Sizes
	mm	in	mm	mm	mm	in	mm	Min.	Max.	Min.	Max.	Min.	Max.	350	400	490	530	560	580	600	
FPR-300-1-400	323.9	12.75	18	6	-66	-2 5/8	30	158	158	600	2000	35.8	60.9	720	720						M8–M16
FPR-300-2-400	323.9	12.75	18	8	-66	-2 5/8	30	158	158	600	2000	35.9	75.8	1060	1060						M8–M16
FPR-300-3-400	323.9	12.75	26	10	-48	-1 7/8	45	158	158	600	2000	36.3	108.0	2020	2020						M8–M24
FPR-300-4-400	323.9	12.75	33	10	-38	-1 1/2	55	168	190	600	2000	39.8	134.3	3160	3160						M8–M30
FPR-300-5-400	323.9	12.75	39	12	-28	-1 1/8	65	168	200	600	2000	49.3	176.5	4560	4560						M12–M36
FPR-300-6-400	323.9	12.75	52	15	-3	-1/8	85	188	250	600	2000	65.8	226.0	7300	7300						M20–M48
FPR-300-7-400	323.9	12.75	60	20	12	1/2	100	208	280	700	2000	99.4	310.1	10680	10680						M24–M56
FPR-300-8-400	323.9	12.75	68	25	32	1 1/4	115	208	300	700	2000	115.1	381.3	14800	14800						M36–M64
FPR-300-9-400	323.9	12.75	76	25	11	7/16	130	244	350	700	2000	151.3	444.5	19300	19300						M36–M72
FPR-300-1-490	323.9	12.75	18	6	-66	-2 5/8	30	158	158	600	2000	35.8	60.9	720	720	720	470	280	200	170	M8–M16
FPR-300-2-490	323.9	12.75	18	8	-66	-2 5/8	30	158	158	600	2000	35.9	75.8	1060	1060	1060	690	410	300	250	M8–M16
FPR-300-3-490	323.9	12.75	26	10	-48	-1 7/8	45	158	158	600	2000	36.3	108.0	2020	2020	2020	1310	790	570	480	M8–M24
FPR-300-4-490	323.9	12.75	33	10	-38	-1 1/2	55	168	190	600	2000	39.8	134.3	3160	3160	3160	2050	1230	880	760	M8–M30
FPR-300-5-490	323.9	12.75	39	12	-28	-1 1/8	65	168	200	600	2000	49.3	176.5	4560	4560	4560	2960	1780	1280	1090	M12–M36
FPR-300-6-490	323.9	12.75	52	15	-3	-1/8	85	188	250	600	2000	65.8	226.0	7300	7300	7300	4750	2850	2040	1750	M20–M48
FPR-300-7-490	323.9	12.75	60	20	12	1/2	100	208	270	700	2000	99.4	301.4	10680	10680	10680	6940	4170	2990	2560	M24–M56
FPR-300-8-490	323.9	12.75	68	25	32	1 1/4	115	208	300	700	2000	115.1	381.3	14800	14800	14800	9620	5770	4140	3550	M36–M64
FPR-300-9-490	323.9	12.75	76	25	11	7/16	130	244	340	700	2000	151.3	434.7	19300	19300	19300	12550	7530	5400	4630	M36–M72
FPR-300-1-530	323.9	12.75	18	6	-66	-2 5/8	30	158	158	600	2000	35.8	71.7	720	720	720	720	430	320	260	M8–M16
FPR-300-2-530	323.9	12.75	18	8	-66	-2 5/8	30	158	158	600	2000	35.9	84.1	1060	1060	1060	1060	640	470	380	M8–M16
FPR-300-3-530	323.9	12.75	26	10	-48	-1 7/8	45	158	170	600	2000	36.3	119.1	2020	2020	2020	2020	1210	890	730	M8–M24
FPR-300-4-530	323.9	12.75	33	10	-38	-1 1/2	55	168	200	600	2000	44.3	139.9	3160	3160	3160	3160	1900	1390	1140	M8–M30
FPR-300-5-530	323.9	12.75	39	12	-28	-1 1/8	65	168	220	600	2000	50.9	190.5	4560	4560	4560	4560	2740	2010	1640	M12–M36
FPR-300-6-530	323.9	12.75	52	15	-3	-1/8	85	188	250	700	2000	84.7	268.7	7300	7300	7300	7300	4380	3210	2630	M20–M48
FPR-300-7-530	323.9	12.75	60	20	12	1/2	100	208	300	700	2000	109.3	332.7	10680	10680	10680	10680	6410	4700	3840	M24–M56
FPR-300-8-530	323.9	12.75	68	25	32	1 1/4	115	208	320	700	2000	136.5	401.3	14800	14800	14800	14800	8880	6510	5330	M36–M64
FPR-300-9-530	323.9	12.75	76	25	11	7/16	130	244	340	700	2000	157.8	495.6	19300	19300	19300	19300	11580	8490	6950	M36–M72
FPR-300-1-560	323.9	12.75	18	6	-66	-2 5/8	30	158	158	600	2000	35.8	79.9	720	720	720	720	720	560	420	M8–M16
FPR-300-2-560	323.9	12.75	18	8	-66	-2 5/8	30	158	158	600	2000	35.9	102.2	1060	1060	1060	1060	1060	830	610	M8–M16
FPR-300-3-560	323.9	12.75	26	10	-48	-1 7/8	45	158	190	600	2000	36.3	130.1	2020	2020	2020	2020	2020	1580	1170	M8–M24
FPR-300-4-560	323.9	12.75	33	10	-38	-1 1/2	55	168	210	600	2000	48.8	182.9	3160	3160	3160	3160	3160	2460	1830	M8–M30
FPR-300-5-560	323.9	12.75	39	12	-28	-1 1/8	65	168	250	600	2000	58.9	216.4	4560	4560	4560	4560	4560	3560	2640	M12–M36
FPR-300-6-560	323.9	12.75	52	15	-3	-1/8	85	188	280	700	2000	94.5	294.2	7300	7300	7300	7300	7300	5690	4230	M20–M48
FPR-300-7-560	323.9	12.75	60	20	12	1/2	100	208	300	700	2000	130.0	378.2	10680	10680	10680	10680	10680	8330	6190	M24–M56
FPR-300-8-560	323.9	12.75	68	25	32	1 1/4	115	230	330	700	2000	151.3	474.7	14800	14800	14800	14800	14800	11540	8580	M36–M64
FPR-300-9-560	323.9	12.75	76	25	11	7/16	130	260	370	800	2000	210.3	529.8	19300	19300	19300	19300	19300	15050	11190	M36–M72
FPR-300-1-600	323.9	12.75	18	6	-66	-2 5/8	30	158	158	600	2000	35.8	107.5	720	720	720	720	720	720	720	M8–M16
FPR-300-2-600	323.9	12.75	18	8	-66	-2 5/8	30	158	170	600	2000	35.9	118.7	1060	1060	1060	1060	1060	1060	1060	M8–M16
FPR-300-3-600	323.9	12.75	26	10	-48	-1 7/8	45	158	210	600	2000	45.2	178.1	2020	2020	2020	2020	2020	2020	2020	M8–M24
FPR-300-4-600	323.9	12.75	33	10	-38	-1 1/2	55	168	230	600	2000	65.8	240.5	3160	3160	3160	3160	3160	3160	3160	M8–M30
FPR-300-5-600	323.9	12.75	39	12	-28	-1 1/8	65	168	270	600	2000	73.0	274.6	4560	4560	4560	4560	4560	4560	4560	M12–M36
FPR-300-6-600	323.9	12.75	52	15	-3	-1/8	85	200	310	700	2000	119.5	371.4	7300	7300	7300	7300	7300	7300	7300	M20–M48
FPR-300-7-600	323.9	12.75	60	20	12	1/2	100	240	350	700	2000	151.5	494.6	10680	10680	10680	10680	10680	10680	10680	M24–M56
FPR-300-8-600	323.9	12.75	68	25	32	1 1/4	115	280	400	800	2000	211.0	561.3	14800	14800	14800	14800	14800	14800	14800	M36–M64
FPR-300-9-600	323.9	12.75	76	25	11	7/16	130	290	420	800	2000	251.9	675.6	19300	19300	19300	19300	19300	19300	19300	M36–M72

FPR RISER CLAMP FLAT PLATE TYPE

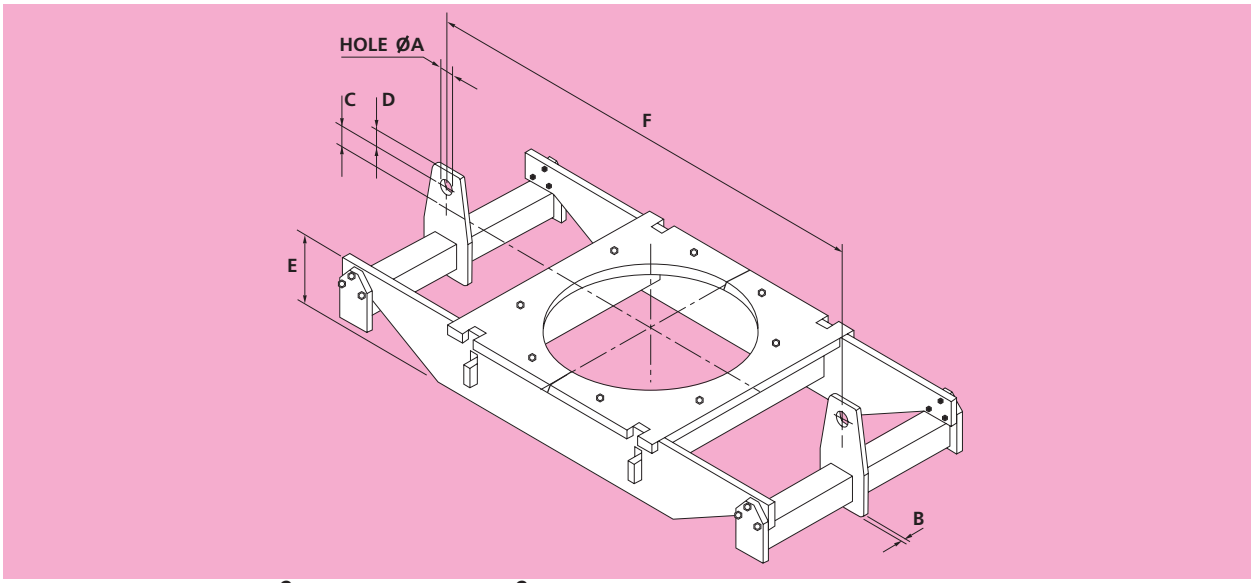

Material: Carbon Steel to 400°C Alloy Steel above 400°C End Beams and Lugs: Carbon Steel. Order by Part No. and Rod Centres "F"

Part Number	Pipe O/D		A	B	C		D	E		F		Weight kgf		Load Capacity (kgf) at Temperature C							Compatible with Rod Sizes
	mm	in	mm	mm	mm	in	mm	Min.	Max.	Min.	Max.	Min.	Max.	350	400	490	530	560	580	600	
FPR-350-1-400	355.6	14	18	6	-66	-2 5/8	30	158	158	600	2000	38.5	63.7	720	720						M8–M16
FPR-350-2-400	355.6	14	18	8	-66	-2 5/8	30	158	158	600	2000	38.6	78.8	1060	1060						M8–M16
FPR-350-3-400	355.6	14	26	10	-48	-1 7/8	45	158	158	600	2000	39.0	111.3	2020	2020						M8–M24
FPR-350-4-400	355.6	14	33	10	-38	-1 1/2	55	168	190	600	2000	42.7	138.0	3160	3160						M8–M30
FPR-350-5-400	355.6	14	39	12	-28	-1 1/8	65	168	200	700	2000	56.9	181.2	4560	4560						M12–M36
FPR-350-6-400	355.6	14	52	15	-3	-1/8	85	188	250	700	2000	84.7	232.1	7300	7300						M20–M48
FPR-350-7-400	355.6	14	60	20	12	1/2	100	208	280	700	2000	110.7	323.9	10680	10680						M24–M56
FPR-350-8-400	355.6	14	68	25	32	1 1/4	115	208	300	800	2000	155.6	390.2	14800	14800						M36–M64
FPR-350-9-400	355.6	14	76	25	11	7/16	130	264	340	800	2000	184.9	460.0	19300	19300						M36–M72
FPR-350-10-400	355.6	14	86	30	26	1	140	264	380	800	2000	233.8	581.0	26700	26700						M36–M80
FPR-350-1-490	355.6	14	18	6	-66	-2 5/8	30	158	158	600	2000	38.5	63.7	720	720	720	470	280	200	170	M8–M16
FPR-350-2-490	355.6	14	18	8	-66	-2 5/8	30	158	158	600	2000	38.6	78.8	1060	1060	1060	690	410	300	250	M8–M16
FPR-350-3-490	355.6	14	26	10	-48	-1 7/8	45	158	158	600	2000	39.0	111.3	2020	2020	2020	1310	790	570	480	M8–M24
FPR-350-4-490	355.6	14	33	10	-38	-1 1/2	55	168	180	600	2000	42.7	132.5	3160	3160	3160	2050	1230	880	760	M8–M30
FPR-350-5-490	355.6	14	39	12	-28	-1 1/8	65	168	200	700	2000	56.9	181.2	4560	4560	4560	2960	1780	1280	1090	M12–M36
FPR-350-6-490	355.6	14	52	15	-3	-1/8	85	188	250	700	2000	84.7	232.1	7300	7300	7300	4750	2850	2040	1750	M20–M48
FPR-350-7-490	355.6	14	60	20	12	1/2	100	208	280	700	2000	110.7	323.9	10680	10680	10680	6940	4170	2990	2560	M24–M56
FPR-350-8-490	355.6	14	68	25	32	1 1/4	115	208	300	800	2000	149.5	390.2	14800	14800	14800	9620	5770	4140	3550	M36–M64
FPR-350-9-490	355.6	14	76	25	11	7/16	130	264	340	800	2000	184.9	460.0	19300	19300	19300	12550	7530	5400	4630	M36–M72
FPR-350-10-490	355.6	14	86	30	26	1	140	264	380	800	2000	229.5	581.0	26700	26700	26700	17360	10410	7480	6410	M36–M80
FPR-350-1-530	355.6	14	18	6	-66	-2 5/8	30	158	158	600	2000	38.5	74.6	720	720	720	720	430	320	260	M8–M16
FPR-350-2-530	355.6	14	18	8	-66	-2 5/8	30	158	158	600	2000	38.6	83.0	1060	1060	1060	1060	640	470	380	M8–M16
FPR-350-3-530	355.6	14	26	10	-48	-1 7/8	45	158	160	600	2000	39.0	117.0	2020	2020	2020	2020	1210	890	730	M8–M24
FPR-350-4-530	355.6	14	33	10	-38	-1 1/2	55	168	200	700	2000	54.6	147.1	3160	3160	3160	3160	1900	1390	1140	M8–M30
FPR-350-5-530	355.6	14	39	12	-28	-1 1/8	65	168	220	700	2000	66.1	201.4	4560	4560	4560	4560	2740	2010	1640	M12–M36
FPR-350-6-530	355.6	14	52	15	-3	-1/8	85	188	250	700	2000	87.1	275.3	7300	7300	7300	7300	4380	3210	2630	M20–M48
FPR-350-7-530	355.6	14	60	20	12	1/2	100	208	300	700	2000	116.0	341.2	10680	10680	10680	10680	6410	4700	3840	M24–M56
FPR-350-8-530	355.6	14	68	25	32	1 1/4	115	220	320	800	2000	162.8	416.9	14800	14800	14800	14800	8880	6510	5330	M36–M64
FPR-350-9-530	355.6	14	76	25	11	7/16	130	264	340	800	2000	198.4	523.3	19300	19300	19300	19300	11580	8490	6950	M36–M72
FPR-350-10-530	355.6	14	86	30	26	1	140	270	400	800	2000	249.2	604.4	26700	26700	26700	26700	16020	11750	9610	M36–M80
FPR-350-1-560	355.6	14	18	6	-66	-2 5/8	30	158	158	600	2000	38.5	82.9	720	720	720	720	720	560	420	M8–M16
FPR-350-2-560	355.6	14	18	8	-66	-2 5/8	30	158	158	600	2000	38.6	105.5	1060	1060	1060	1060	1060	830	610	M8–M16
FPR-350-3-560	355.6	14	26	10	-48	-1 7/8	45	158	190	600	2000	43.6	133.6	2020	2020	2020	2020	2020	1580	1170	M8–M24
FPR-350-4-560	355.6	14	33	10	-38	-1 1/2	55	168	200	700	2000	63.8	180.8	3160	3160	3160	3160	3160	2460	1830	M8–M30
FPR-350-5-560	355.6	14	39	12	-28	-1 1/8	65	168	250	700	2000	76.7	222.3	4560	4560	4560	4560	4560	3560	2640	M12–M36
FPR-350-6-560	355.6	14	52	15	-3	-1/8	85	188	280	700	2000	100.7	307.6	7300	7300	7300	7300	7300	5690	4230	M20–M48
FPR-350-7-560	355.6	14	60	20	12	1/2	100	210	300	800	2000	155.9	387.1	10680	10680	10680	10680	10680	8330	6190	M24–M56
FPR-350-8-560	355.6	14	68	25	32	1 1/4	115	250	350	800	2000	179.6	447.0	14800	14800	14800	14800	14800	11540	8580	M36–M64
FPR-350-9-560	355.6	14	76	25	11	7/16	130	264	370	800	2000	229.7	565.0	19300	19300	19300	19300	19300	15050	11190	M36–M72
FPR-350-10-560	355.6	14	86	30	26	1	140	300	400	800	2000	269.2	687.6	26700	26700	26700	26700	26700	20830	15490	M36–M80
FPR-350-1-600	355.6	14	18	6	-66	-2 5/8	30	158	158	600	2000	38.5	105.4	720	720	720	720	720	720	720	M8–M16
FPR-350-2-600	355.6	14	18	8	-66	-2 5/8	30	158	170	600	2000	38.6	122.1	1060	1060	1060	1060	1060	1060	1060	M8–M16
FPR-350-3-600	355.6	14	26	10	-48	-1 7/8	45	158	200	600	2000	57.5	175.8	2020	2020	2020	2020	2020	2020	2020	M8–M24
FPR-350-4-600	355.6	14	33	10	-38	-1 1/2	55	168	230	700	2000	78.7	246.8	3160	3160	3160	3160	3160	3160	3160	M8–M30
FPR-350-5-600	355.6	14	39	12	-28	-1 1/8	65	180	280	700	2000	92.5	296.4	4560	4560	4560	4560	4560	4560	4560	M12–M36
FPR-350-6-600	355.6	14	52	15	-3	-1/8	85	200	310	700	2000	132.3	386.5	7300	7300	7300	7300	7300	7300	7300	M20–M48
FPR-350-7-600	355.6	14	60	20	12	1/2	100	240	340	800	2000	200.6	494.1	10680	10680	10680	10680	10680	10680	10680	M24–M56
FPR-350-8-600	355.6	14	68	25	32	1 1/4	115	280	370	800	2000	227.7	606.5	14800	14800	14800	14800	14800	14800	14800	M36–M64
FPR-350-9-600	355.6	14	76	25	11	7/16	130	290	420	800	2000	284.7	710.0	19300	19300	19300	19300	19300	19300	19300	M36–M72
FPR-350-10-600	355.6	14	86	30	26	1	140	330	460	800	2000	316.2	847.1	26700	26700	26700	26700	26700	26700	26700	M36–M80

FPR RISER CLAMP FLAT PLATE TYPE

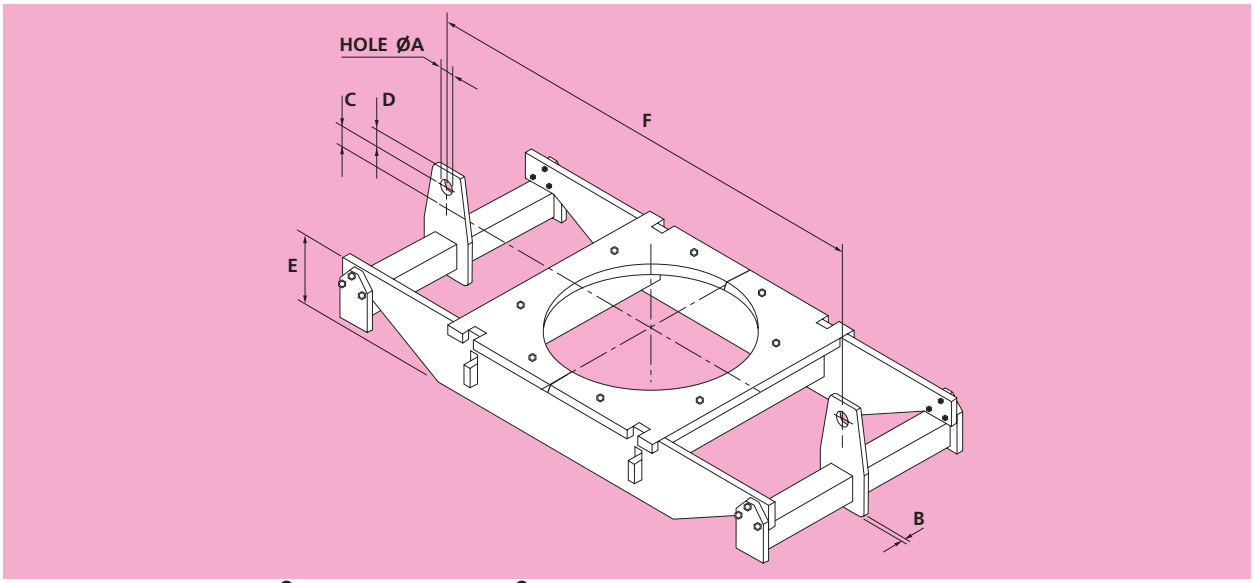

Material: Carbon Steel to 400°C Alloy Steel above 400°C End Beams and Lugs: Carbon Steel. Order by Part No. and Rod Centres "F"

Part Number	Pipe O/D		A	B	C		D	E		F		Weight kgf		Load Capacity (kgf) at Temperature C							Compatible with Rod Sizes
	mm	in	mm	mm	mm	in	mm	Min.	Max.	Min.	Max.	Min.	Max.	350	400	490	530	560	580	600	
FPR-400-1-400	406.4	16	18	6	-66	-2 5/8	30	158	158	700	2500	44.7	90.2	720	720						M8–M16
FPR-400-2-400	406.4	16	18	8	-66	-2 5/8	30	158	158	700	2500	44.9	105.5	1060	1060						M8–M16
FPR-400-3-400	406.4	16	26	10	-48	-1 7/8	45	158	170	700	2500	45.2	148.2	2020	2020						M8–M24
FPR-400-4-400	406.4	16	33	10	-38	-1 1/2	55	168	190	700	2500	54.9	209.3	3160	3160						M8–M30
FPR-400-5-400	406.4	16	39	12	-28	-1 1/8	65	188	230	700	2500	78.1	260.4	4560	4560						M12–M36
FPR-400-6-400	406.4	16	52	15	-3	-1/8	85	188	260	800	2500	99.2	341.1	7300	7300						M20–M48
FPR-400-7-400	406.4	16	60	20	12	1/2	100	208	290	800	2500	128.6	451.0	10680	10680						M24–M56
FPR-400-8-400	406.4	16	68	25	32	1 1/4	115	208	340	800	2500	165.2	523.9	14800	14800						M36–M64
FPR-400-9-400	406.4	16	76	25	11	7/16	130	264	370	900	2500	217.7	672.8	19300	19300						M36–M72
FPR-400-10-400	406.4	16	86	30	26	1	140	294	410	900	2500	296.6	866.2	26700	26700						M36–M80
FPR-400-11-400	406.4	16	86	35	-10	-3/8	140	330	450	900	2500	337.7	1043.3	36000	36000						M36–M80
FPR-400-1-490	406.4	16	18	6	-66	-2 5/8	30	158	158	700	2500	44.7	90.2	720	720	720	470	280	200	170	M8–M16
FPR-400-2-490	406.4	16	18	8	-66	-2 5/8	30	158	158	700	2500	44.9	105.5	1060	1060	1060	690	410	300	250	M8–M16
FPR-400-3-490	406.4	16	26	10	-48	-1 7/8	45	158	170	700	2500	45.2	148.2	2020	2020	2020	1310	790	570	480	M8–M24
FPR-400-4-490	406.4	16	33	10	-38	-1 1/2	55	168	190	700	2500	54.9	209.3	3160	3160	3160	2050	1230	880	760	M8–M30
FPR-400-5-490	406.4	16	39	12	-28	-1 1/8	65	188	230	700	2500	78.1	260.4	4560	4560	4560	2960	1780	1280	1090	M12–M36
FPR-400-6-490	406.4	16	52	15	-3	-1/8	85	188	260	800	2500	99.2	341.1	7300	7300	7300	4750	2850	2040	1750	M20–M48
FPR-400-7-490	406.4	16	60	20	12	1/2	100	208	290	800	2500	128.6	451.0	10680	10680	10680	6940	4170	2990	2560	M24–M56
FPR-400-8-490	406.4	16	68	25	32	1 1/4	115	208	340	800	2500	165.2	523.9	14800	14800	14800	9620	5770	4140	3550	M36–M64
FPR-400-9-490	406.4	16	76	25	11	7/16	130	264	360	900	2500	217.7	658.8	19300	19300	19300	12550	7530	5400	4630	M36–M72
FPR-400-10-490	406.4	16	86	30	26	1	140	294	400	900	2500	296.6	850.3	26700	26700	26700	17360	10410	7480	6410	M36–M80
FPR-400-11-490	406.4	16	86	35	-10	-3/8	140	330	440	900	2500	337.7	1025.6	36000	36000	36000	23400	14040	10080	8640	M36–M80
FPR-400-1-530	406.4	16	18	6	-66	-2 5/8	30	158	158	700	2500	44.7	100.4	720	720	720	720	430	320	260	M8–M16
FPR-400-2-530	406.4	16	18	8	-66	-2 5/8	30	158	158	700	2500	44.9	127.4	1060	1060	1060	1060	640	470	380	M8–M16
FPR-400-3-530	406.4	16	26	10	-48	-1 7/8	45	158	180	700	2500	50.9	155.2	2020	2020	2020	2020	1210	890	730	M8–M24
FPR-400-4-530	406.4	16	33	10	-38	-1 1/2	55	168	200	700	2500	60.7	218.1	3160	3160	3160	3160	1900	1390	1140	M8–M30
FPR-400-5-530	406.4	16	39	12	-28	-1 1/8	65	188	250	700	2500	80.0	277.8	4560	4560	4560	4560	2740	2010	1640	M12–M36
FPR-400-6-530	406.4	16	52	15	-3	-1/8	85	188	280	800	2500	112.1	370.0	7300	7300	7300	7300	4380	3210	2630	M20–M48
FPR-400-7-530	406.4	16	60	20	12	1/2	100	208	310	800	2500	141.6	483.6	10680	10680	10680	10680	6410	4700	3840	M24–M56
FPR-400-8-530	406.4	16	68	25	32	1 1/4	115	210	340	800	2500	180.3	595.3	14800	14800	14800	14800	8880	6510	5330	M36–M64
FPR-400-9-530	406.4	16	76	25	11	7/16	130	264	380	900	2500	250.5	687.2	19300	19300	19300	19300	11580	8490	6950	M36–M72
FPR-400-10-530	406.4	16	86	30	26	1	140	294	420	900	2500	314.7	882.7	26700	26700	26700	26700	16020	11750	9610	M36–M80
FPR-400-11-530	406.4	16	86	35	-10	-3/8	140	330	460	900	2500	373.9	1061.7	36000	36000	36000	36000	21600	15840	12960	M36–M80
FPR-400-1-560	406.4	16	18	6	-66	-2 5/8	30	158	158	700	2500	44.7	105.4	720	720	720	720	720	560	420	M8–M16
FPR-400-2-560	406.4	16	18	8	-66	-2 5/8	30	158	160	700	2500	44.9	141.1	1060	1060	1060	1060	1060	830	610	M8–M16
FPR-400-3-560	406.4	16	26	10	-48	-1 7/8	45	158	190	700	2500	54.6	204.1	2020	2020	2020	2020	2020	1580	1170	M8–M24
FPR-400-4-560	406.4	16	33	10	-38	-1 1/2	55	168	230	700	2500	71.6	251.4	3160	3160	3160	3160	3160	2460	1830	M8–M30
FPR-400-5-560	406.4	16	39	12	-28	-1 1/8	65	188	250	700	2500	91.7	329.0	4560	4560	4560	4560	4560	3560	2640	M12–M36
FPR-400-6-560	406.4	16	52	15	-3	-1/8	85	190	280	800	2500	117.9	421.5	7300	7300	7300	7300	7300	5690	4230	M20–M48
FPR-400-7-560	406.4	16	60	20	12	1/2	100	208	340	800	2500	165.9	520.8	10680	10680	10680	10680	10680	8330	6190	M24–M56
FPR-400-8-560	406.4	16	68	25	32	1 1/4	115	240	370	800	2500	191.6	646.0	14800	14800	14800	14800	14800	11540	8580	M36–M64
FPR-400-9-560	406.4	16	76	25	11	7/16	130	270	390	900	2500	273.2	797.3	19300	19300	19300	19300	19300	15050	11190	M36–M72
FPR-400-10-560	406.4	16	86	30	26	1	140	294	430	900	2500	346.8	990.5	26700	26700	26700	26700	26700	20830	15490	M36–M80
FPR-400-11-560	406.4	16	86	35	-10	-3/8	140	340	490	900	2500	413.7	1124.9	36000	36000	36000	36000	36000	28080	20880	M36–M80
FPR-400-1-600	406.4	16	18	6	-66	-2 5/8	30	158	160	700	2500	44.7	141.0	720	720	720	720	720	720	720	M8–M16
FPR-400-2-600	406.4	16	18	8	-66	-2 5/8	30	158	190	700	2500	50.5	161.5	1060	1060	1060	1060	1060	1060	1060	M8–M16
FPR-400-3-600	406.4	16	26	10	-48	-1 7/8	45	158	230	700	2500	69.3	246.1	2020	2020	2020	2020	2020	2020	2020	M8–M24
FPR-400-4-600	406.4	16	33	10	-38	-1 1/2	55	168	260	700	2500	96.7	329.1	3160	3160	3160	3160	3160	3160	3160	M8–M30
FPR-400-5-600	406.4	16	39	12	-28	-1 1/8	65	188	280	700	2500	109.5	420.1	4560	4560	4560	4560	4560	4560	4560	M12–M36
FPR-400-6-600	406.4	16	52	15	-3	-1/8	85	210	350	800	2500	162.1	514.9	7300	7300	7300	7300	7300	7300	7300	M20–M48
FPR-400-7-600	406.4	16	60	20	12	1/2	100	250	390	800	2500	199.6	671.1	10680	10680	10680	10680	10680	10680	10680	M24–M56
FPR-400-8-600	406.4	16	68	25	32	1 1/4	115	290	420	900	2500	268.6	815.3	14800	14800	14800	14800	14800	14800	14800	M36–M64
FPR-400-9-600	406.4	16	76	25	11	7/16	130	310	440	900	2500	337.3	970.8	19300	19300	19300	19300	19300	19300	19300	M36–M72
FPR-400-10-600	406.4	16	86	30	26	1	140	330	450	900	2500	442.1	1239.5	26700	26700	26700	26700	26700	26700	26700	M36–M80
FPR-400-11-600	406.4	16	86	35	-10	-3/8	140	390	530	900	2500	514.9	1454.7	36000	36000	36000	36000	36000	36000	36000	M36–M80

FPR RISER CLAMP FLAT PLATE TYPE

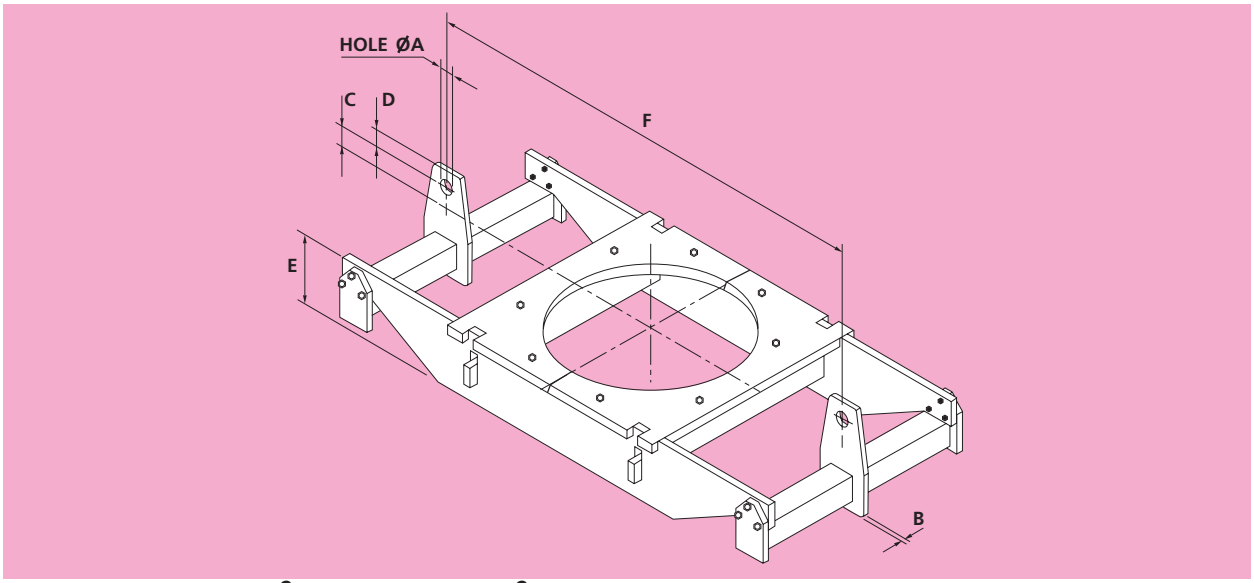

Material: Carbon Steel to 400°C Alloy Steel above 400°C End Beams and Lugs: Carbon Steel. Order by Part No. and Rod Centres "F"

Part Number	Pipe O/D		A	B	C		D	E		F		Weight kgf		Load Capacity (kgf) at Temperature C							Compatible with Rod Sizes
	mm	in	mm	mm	mm	in	mm	Min.	Max.	Min.	Max.	Min.	Max.	350	400	490	530	560	580	600	
FPR-450-2-400	457.2	18	18	8	-66	-2 5/8	30	158	158	700	2500	50.1	106.2	1060	1060						M8–M16
FPR-450-3-400	457.2	18	26	10	-48	-1 7/8	45	158	170	700	2500	50.5	154.6	2020	2020						M8–M24
FPR-450-4-400	457.2	18	33	10	-38	-1 1/2	55	168	190	800	2500	69.8	217.9	3160	3160						M8–M30
FPR-450-5-400	457.2	18	39	12	-28	-1 1/8	65	188	230	800	2500	89.7	271.5	4560	4560						M12–M36
FPR-450-6-400	457.2	18	52	15	-3	-1/8	85	188	260	800	2500	120.8	363.3	7300	7300						M20–M48
FPR-450-7-400	457.2	18	60	20	12	1/2	100	208	290	900	2500	160.6	476.8	10680	10680						M24–M56
FPR-450-8-400	457.2	18	68	25	32	1 1/4	115	210	340	900	2500	203.4	542.5	14800	14800						M36–M64
FPR-450-9-400	457.2	18	76	25	11	7/16	130	264	360	900	2500	231.2	681.3	19300	19300						M36–M72
FPR-450-10-400	457.2	18	86	30	26	1	140	294	400	1000	2500	348.2	877.6	26700	26700						M36–M80
FPR-450-11-400	457.2	18	86	35	-10	-3/8	140	330	450	1000	2500	420.3	1093.9	36000	36000						M36–M80
FPR-450-12-400	457.2	18	86	40	-10	-3/8	140	340	470	1000	2500	479.2	1387.2	46050	46050						M36–M80
FPR-450-2-490	457.2	18	18	8	-66	-2 5/8	30	158	158	700	2500	50.1	106.2	1060	1060	1060	690	410	300	250	M8–M16
FPR-450-3-490	457.2	18	26	10	-48	-1 7/8	45	158	170	700	2500	50.5	154.6	2020	2020	2020	1310	790	570	480	M8–M24
FPR-450-4-490	457.2	18	33	10	-38	-1 1/2	55	168	190	800	2500	69.8	217.9	3160	3160	3160	2050	1230	880	760	M8–M30
FPR-450-5-490	457.2	18	39	12	-28	-1 1/8	65	188	220	800	2500	89.7	262.9	4560	4560	4560	2960	1780	1280	1090	M12–M36
FPR-450-6-490	457.2	18	52	15	-3	-1/8	85	188	260	800	2500	120.8	363.3	7300	7300	7300	4750	2850	2040	1750	M20–M48
FPR-450-7-490	457.2	18	60	20	12	1/2	100	208	290	900	2500	160.6	476.8	10680	10680	10680	6940	4170	2990	2560	M24–M56
FPR-450-8-490	457.2	18	68	25	32	1 1/4	115	208	330	900	2500	190.1	529.8	14800	14800	14800	9620	5770	4140	3550	M36–M64
FPR-450-9-490	457.2	18	76	25	11	7/16	130	264	360	900	2500	231.2	681.3	19300	19300	19300	12550	7530	5400	4630	M36–M72
FPR-450-10-490	457.2	18	86	30	26	1	140	294	400	1000	2500	332.6	877.6	26700	26700	26700	17360	10410	7480	6410	M36–M80
FPR-450-11-490	457.2	18	86	35	-10	-3/8	140	330	440	1000	2500	420.3	1076.0	36000	36000	36000	23400	14040	10080	8640	M36–M80
FPR-450-12-490	457.2	18	86	40	-10	-3/8	140	340	500	1000	2500	479.2	1222.3	60504	60504	6050	29930	17960	12890	11050	M36–M80
FPR-450-2-530	457.2	18	18	8	-66	-2 5/8	30	158	158	700	2500	50.1	133.6	1060	1060	1060	1060	640	470	380	M8–M16
FPR-450-3-530	457.2	18	26	10	-48	-1 7/8	45	158	180	700	2500	57.2	167.0	2020	2020	2020	2020	1210	890	730	M8–M24
FPR-450-4-530	457.2	18	33	10	-38	-1 1/2	55	168	210	800	2500	80.6	244.7	3160	3160	3160	3160	1900	1390	1140	M8–M30
FPR-450-5-530	457.2	18	39	12	-28	-1 1/8	65	188	240	800	2500	101.4	280.5	4560	4560	4560	4560	2740	2010	1640	M12–M36
FPR-450-6-530	457.2	18	52	15	-3	-1/8	85	188	280	800	2500	123.7	384.5	7300	7300	7300	7300	4380	3210	2630	M20–M48
FPR-450-7-530	457.2	18	60	20	12	1/2	100	208	310	900	2500	182.7	501.8	10680	10680	10680	10680	6410	4700	3840	M24–M56
FPR-450-8-530	457.2	18	68	25	32	1 1/4	115	220	340	900	2500	207.7	625.6	14800	14800	14800	14800	8880	6510	5330	M36–M64
FPR-450-9-530	457.2	18	76	25	11	7/16	130	264	380	900	2500	248.9	720.5	19300	19300	19300	19300	11580	8490	6950	M36–M72
FPR-450-10-530	457.2	18	86	30	26	1	140	294	420	1000	2500	353.5	921.7	26700	26700	26700	26700	16020	11750	9610	M36–M80
FPR-450-11-530	457.2	18	86	35	-10	-3/8	140	330	460	1000	2500	426.6	1112.6	36000	36000	36000	36000	21600	15840	12960	M36–M80
FPR-450-12-530	457.2	18	86	40	-10	-3/8	140	340	480	1000	2500	533.4	1409.8	46050	46050	46050	46050	27630	20260	16580	M36–M80
FPR-450-2-560	457.2	18	18	8	-66	-2 5/8	30	158	158	700	2500	50.1	140.4	1060	1060	1060	1060	1060	830	610	M8–M16
FPR-450-3-560	457.2	18	26	10	-48	-1 7/8	45	158	180	800	2500	65.4	203.9	2020	2020	2020	2020	2020	1580	1170	M8–M24
FPR-450-4-560	457.2	18	33	10	-38	-1 1/2	55	168	230	800	2500	84.9	262.2	3160	3160	3160	3160	3160	2460	1830	M8–M30
FPR-450-5-560	457.2	18	39	12	-28	-1 1/8	65	188	240	800	2500	119.4	330.8	4560	4560	4560	4560	4560	3560	2640	M12–M36
FPR-450-6-560	457.2	18	52	15	-3	-1/8	85	200	280	800	2500	141.7	436.6	7300	7300	7300	7300	7300	5690	4230	M20–M48
FPR-450-7-560	457.2	18	60	20	12	1/2	100	220	340	900	2500	204.6	539.4	10680	10680	10680	10680	10680	8330	6190	M24–M56
FPR-450-8-560	457.2	18	68	25	32	1 1/4	115	250	360	900	2500	229.4	654.2	14800	14800	14800	14800	14800	11540	8580	M36–M64
FPR-450-9-560	457.2	18	76	25	11	7/16	130	264	390	900	2500	299.2	823.8	19300	19300	19300	19300	19300	15050	11190	M36–M72
FPR-450-10-560	457.2	18	86	30	26	1	140	300	450	1000	2500	399.8	970.6	26700	26700	26700	26700	26700	20830	15490	M36–M80
FPR-450-11-560	457.2	18	86	35	-10	-3/8	140	350	500	1000	2500	472.3	1208.2	36000	36000	36000	36000	36000	28080	20880	M36–M80
FPR-450-12-560	457.2	18	86	40	-10	-3/8	140	370	500	1000	2500	576.4	1454.1	46050	46050	46050	46050	46050	35920	26710	M36–M80
FPR-450-2-600	457.2	18	18	8	-66	-2 5/8	30	158	190	700	2500	56.9	173.4	1060	1060	1060	1060	1060	1060	1060	M8–M16
FPR-450-3-600	457.2	18	26	10	-48	-1 7/8	45	158	230	800	2500	80.5	256.6	2020	2020	2020	2020	2020	2020	2020	M8–M24
FPR-450-4-600	457.2	18	33	10	-38	-1 1/2	55	168	260	800	2500	111.7	351.1	3160	3160	3160	3160	3160	3160	3160	M8–M30
FPR-450-5-600	457.2	18	39	12	-28	-1 1/8	65	200	300	800	2500	140.3	404.2	4560	4560	4560	4560	4560	4560	4560	M12–M36
FPR-450-6-600	457.2	18	52	15	-3	-1/8	85	220	350	800	2500	182.4	542.8	7300	7300	7300	7300	7300	7300	7300	M20–M48
FPR-450-7-600	457.2	18	60	20	12	1/2	100	240	390	900	2500	253.5	704.1	10680	10680	10680	10680	10680	10680	10680	M24–M56
FPR-450-8-600	457.2	18	68	25	32	1 1/4	115	280	420	900	2500	286.5	853.2	14800	14800	14800	14800	14800	14800	14800	M36–M64
FPR-450-9-600	457.2	18	76	25	11	7/16	130	320	440	1000	2500	382.7	1012.6	19300	19300	19300	19300	19300	19300	19300	M36–M72
FPR-450-10-600	457.2	18	86	30	26	1	140	340	450	1000	2500	497.5	1299.7	26700	26700	26700	26700	26700	26700	26700	M36–M80
FPR-450-11-600	457.2	18	86	35	-10	-3/8	140	400	520	1000	2500	585.6	1483.6	36000	36000	36000	36000	36000	36000	36000	M36–M80
FPR-450-12-600	457.2	18	86	40	-10	-3/8	140	420	590	1000	2500	704.7	1676.8	46050	46050	46050	46050	46050	46050	46050	M36–M80

FPR RISER CLAMP FLAT PLATE TYPE

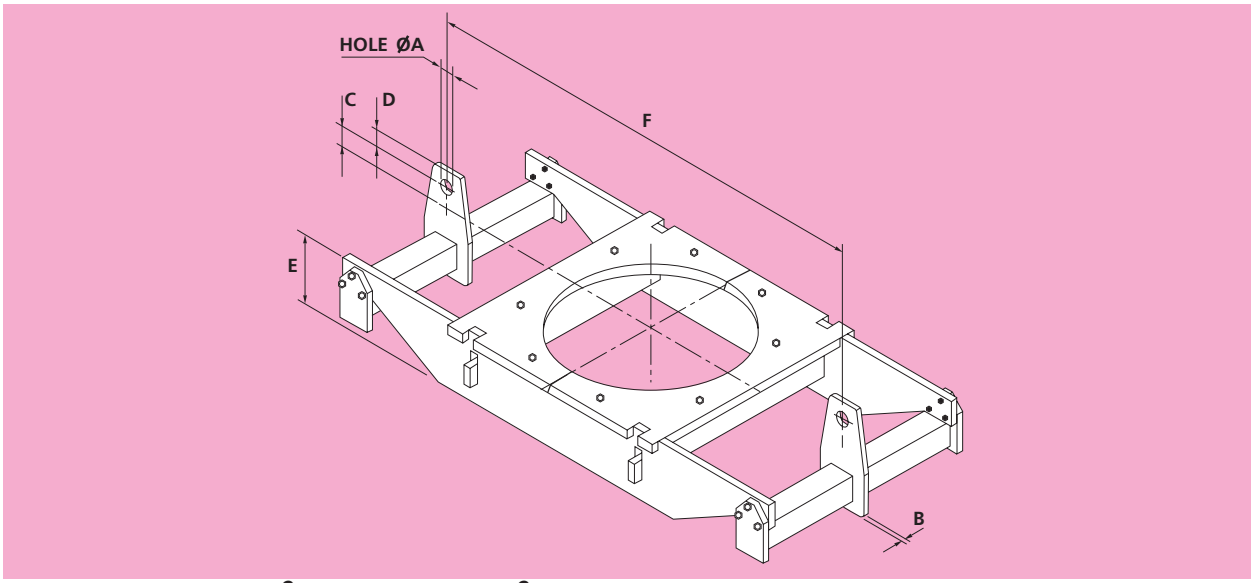

Material: Carbon Steel to 400°C Alloy Steel above 400°C End Beams and Lugs: Carbon Steel. Order by Part No. and Rod Centres "F"

Part Number	Pipe O/D		A	B	C		D	E		F		Weight kgf		Load Capacity (kgf) at Temperature C							Compatible with Rod
	mm	in	mm	mm	mm	in	mm	Min.	Max.	Min.	Max.	Min.	Max.	350	400	490	530	560	580	600	Sizes
FPR-500-2-400	508	20	18	8	-66	-2 5/8	30	158	158	800	2500	57.4	112.4	1060	1060						M8–M16
FPR-500-3-400	508	20	26	10	-48	-1 7/8	45	168	168	800	2500	62.2	159.5	2020	2020						M8–M24
FPR-500-4-400	508	20	33	10	-38	-1 1/2	55	168	200	800	2500	77.3	194.4	3160	3160						M8–M30
FPR-500-5-400	508	20	39	12	-28	-1 1/8	65	188	220	900	2500	104.4	274.6	4560	4560						M12–M36
FPR-500-6-400	508	20	52	15	-3	-1/8	85	208	260	900	2500	149.3	394.2	7300	7300						M20–M48
FPR-500-7-400	508	20	60	20	12	1/2	100	208	290	900	2500	176.0	495.8	10680	10680						M24–M56
FPR-500-8-400	508	20	68	25	32	1 1/4	115	228	340	1000	2500	244.9	589.5	14800	14800						M36–M64
FPR-500-9-400	508	20	76	25	11	7/16	130	264	360	1000	2500	277.2	717.3	19300	19300						M36–M72
FPR-500-10-400	508	20	86	30	26	1	140	294	400	1000	2500	367.6	919.5	26700	26700						M36–M80
FPR-500-11-400	508	20	86	35	-10	-3/8	140	330	440	1100	2500	468.6	1111.4	36000	36000						M36–M80
FPR-500-12-400	508	20	86	40	-10	-3/8	140	350	500	1100	2500	534.6	1264.1	46050	46050						M36–M80
FPR-500-13-400	508	20	86	40	-46	-1 13/16	140	396	520	1100	2500	674.5	1634.4	56250	56250						M36–M80
FPR-500-2-490	508	20	18	8	-66	-2 5/8	30	158	158	800	2500	57.4	112.4	1060	1060	1060	690	410	300	250	M8–M16
FPR-500-3-490	508	20	26	10	-48	-1 7/8	45	168	168	800	2500	62.2	159.5	2020	2020	2020	1310	790	570	480	M8–M24
FPR-500-4-490	508	20	33	10	-38	-1 1/2	55	168	200	800	2500	77.3	194.4	3160	3160	3160	2050	1230	880	760	M8–M30
FPR-500-5-490	508	20	39	12	-28	-1 1/8	65	188	220	900	2500	104.4	274.6	4560	4560	4560	2960	1780	1280	1090	M12–M36
FPR-500-6-490	508	20	52	15	-3	-1/8	85	208	260	900	2500	149.3	394.2	7300	7300	7300	4750	2850	2040	1750	M20–M48
FPR-500-7-490	508	20	60	20	12	1/2	100	208	290	900	2500	176.0	495.8	10680	10680	10680	6940	4170	2990	2560	M24–M56
FPR-500-8-490	508	20	68	25	32	1 1/4	115	228	340	1000	2500	244.9	589.5	14800	14800	14800	9620	5770	4140	3550	M36–M64
FPR-500-9-490	508	20	76	25	11	7/16	130	264	360	1000	2500	277.2	717.3	19300	19300	19300	12550	7530	5400	4630	M36–M72
FPR-500-10-490	508	20	86	30	26	1	140	294	400	1000	2500	367.6	919.5	26700	26700	26700	17360	10410	7480	6410	M36–M80
FPR-500-11-490	508	20	86	35	-10	-3/8	140	330	440	1000	2500	417.9	1111.4	36000	36000	36000	23400	14040	10080	8640	M36–M80
FPR-500-12-490	508	20	86	40	-10	-3/8	140	350	500	1100	2500	534.6	1264.1	46050	46050	46050	29930	17960	12890	11050	M36–M80
FPR-500-13-490	508	20	86	40	-46	-1 13/16	140	396	500	1100	2500	674.5	1560.6	56250	56250	56250	36560	21940	15750	13500	M36–M80
FPR-500-2-530	508	20	18	8	-66	-2 5/8	30	158	158	800	2500	57.4	133.0	1060	1060	1060	1060	640	470	380	M8–M16
FPR-500-3-530	508	20	26	10	-48	-1 7/8	45	168	180	800	2500	70.3	180.1	2020	2020	2020	2020	1210	890	730	M8–M24
FPR-500-4-530	508	20	33	10	-38	-1 1/2	55	168	200	800	2500	92.4	247.3	3160	3160	3160	3160	1900	1390	1140	M8–M30
FPR-500-5-530	508	20	39	12	-28	-1 1/8	65	188	240	900	2500	118.2	292.3	4560	4560	4560	4560	2740	2010	1640	M12–M36
FPR-500-6-530	508	20	52	15	-3	-1/8	85	208	270	900	2500	156.0	404.8	7300	7300	7300	7300	4380	3210	2630	M20–M48
FPR-500-7-530	508	20	60	20	12	1/2	100	208	300	900	2500	198.6	508.7	10680	10680	10680	10680	6410	4700	3840	M24–M56
FPR-500-8-530	508	20	68	25	32	1 1/4	115	230	330	1000	2500	249.3	650.5	14800	14800	14800	14800	8880	6510	5330	M36–M64
FPR-500-9-530	508	20	76	25	11	7/16	130	264	380	1000	2500	309.8	746.4	19300	19300	19300	19300	11580	8490	6950	M36–M72
FPR-500-10-530	508	20	86	30	26	1	140	294	420	1000	2500	390.9	952.7	26700	26700	26700	26700	16020	11750	9610	M36–M80
FPR-500-11-530	508	20	86	35	-10	-3/8	140	340	470	1100	2500	513.8	1193.2	36000	36000	36000	36000	21600	15840	12960	M36–M80
FPR-500-12-530	508	20	86	40	-10	-3/8	140	350	470	1100	2500	592.9	1432.2	46050	46050	46050	46050	27630	20260	16580	M36–M80
FPR-500-13-530	508	20	86	40	-46	-1 13/16	140	396	520	1100	2500	691.1	1634.4	56250	56250	56250	56250	33750	24750	20250	M36–M80
FPR-500-2-560	508	20	18	8	-66	-2 5/8	30	158	158	800	2500	57.4	147.1	1060	1060	1060	1060	1060	830	610	M8–M16
FPR-500-3-560	508	20	26	10	-48	-1 7/8	45	168	200	800	2500	89.8	194.2	2020	2020	2020	2020	2020	1580	1170	M8–M24
FPR-500-4-560	508	20	33	10	-38	-1 1/2	55	168	230	900	2500	106.8	273.6	3160	3160	3160	3160	3160	2460	1830	M8–M30
FPR-500-5-560	508	20	39	12	-28	-1 1/8	65	188	240	900	2500	135.6	355.6	4560	4560	4560	4560	4560	3560	2640	M12–M36
FPR-500-6-560	508	20	52	15	-3	-1/8	85	208	280	900	2500	173.6	481.0	7300	7300	7300	7300	7300	5690	4230	M20–M48
FPR-500-7-560	508	20	60	20	12	1/2	100	220	340	900	2500	222.8	571.1	10680	10680	10680	10680	10680	8330	6190	M24–M56
FPR-500-8-560	508	20	68	25	32	1 1/4	115	240	360	1000	2500	300.9	707.0	14800	14800	14800	14800	14800	11540	8580	M36–M64
FPR-500-9-560	508	20	76	25	11	7/16	130	270	380	1000	2500	338.1	835.3	19300	19300	19300	19300	19300	15050	11190	M36–M72
FPR-500-10-560	508	20	86	30	26	1	140	310	450	1100	2500	447.3	1015.5	26700	26700	26700	26700	26700	20830	15490	M36–M80
FPR-500-11-560	508	20	86	35	-10	-3/8	140	340	490	1100	2500	570.9	1230.3	36000	36000	36000	36000	36000	28080	20880	M36–M80
FPR-500-12-560	508	20	86	40	-10	-3/8	140	380	490	1100	2500	642.6	1477.0	46050	46050	46050	46050	46050	35920	26710	M36–M80
FPR-500-13-560	508	20	86	40	-46	-1 13/16	140	396	550	1100	2500	766.2	1701.7	56250	56250	56250	56250	56250	43880	32630	M36–M80
FPR-500-2-600	508	20	18	8	-66	-2 5/8	30	158	190	800	2500	69.9	181.6	1060	1060	1060	1060	1060	1060	1060	M8–M16
FPR-500-3-600	508	20	26	10	-48	-1 7/8	45	168	230	800	2500	103.5	273.4	2020	2020	2020	2020	2020	2020	2020	M8–M24
FPR-500-4-600	508	20	33	10	-38	-1 1/2	55	170	250	900	2500	130.7	355.0	3160	3160	3160	3160	3160	3160	3160	M8–M30
FPR-500-5-600	508	20	39	12	-28	-1 1/8	65	200	300	900	2500	159.7	431.8	4560	4560	4560	4560	4560	4560	4560	M12–M36
FPR-500-6-600	508	20	52	15	-3	-1/8	85	220	340	900	2500	220.4	568.6	7300	7300	7300	7300	7300	7300	7300	M20–M48
FPR-500-7-600	508	20	60	20	12	1/2	100	250	380	1000	2500	288.9	715.6	10680	10680	10680	10680	10680	10680	10680	M24–M56
FPR-500-8-600	508	20	68	25	32	1 1/4	115	300	410	1000	2500	358.1	885.9	14800	14800	14800	14800	14800	14800	14800	M36–M64
FPR-500-9-600	508	20	76	25	11	7/16	130	310	430	1000	2500	427.8	1027.9	19300	19300	19300	19300	19300	19300	19300	M36–M72
FPR-500-10-600	508	20	86	30	26	1	140	350	450	1100	2500	555.4	1342.5	26700	26700	26700	26700	26700	26700	26700	M36–M80
FPR-500-11-600	508	20	86	35	-10	-3/8	140	380	520	1100	2500	696.4	1557.6	36000	36000	36000	36000	36000	36000	36000	M36–M80
FPR-500-12-600	508	20	86	40	-10	-3/8	140	430	580	1100	2500	783.4	1707.5	46050	46050	46050	46050	46050	46050	46050	M36–M80
FPR-500-13-600	508	20	86	40	-46	-1 13/16	140	450	570	1100	2500	928.0	2024.4	56250	56250	56250	56250	56250	56250	56250	M36–M80

FPR RISER CLAMP FLAT PLATE TYPE

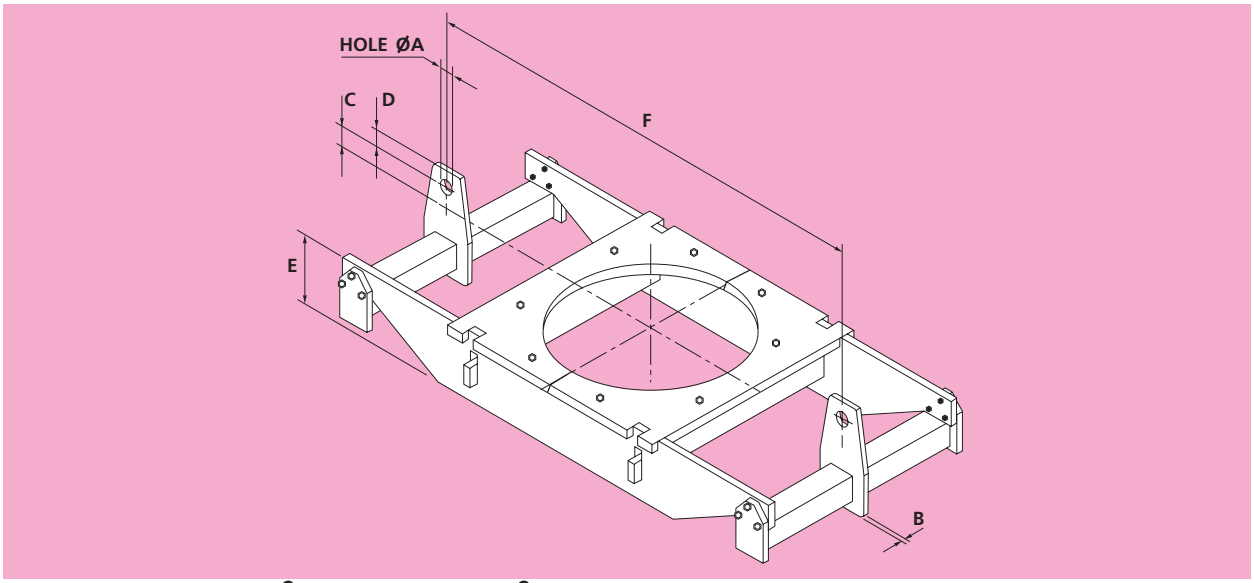

Material: Carbon Steel to 400°C Alloy Steel above 400°C End Beams and Lugs: Carbon Steel. Order by Part No. and Rod Centres "F"

Part Number	Pipe O/D		A	B	C		D	E		F		Weight kgf		Load Capacity (kgf) at Temperature C							Compatible with Rod Sizes
	mm	in	mm	mm	mm	in	mm	Min.	Max.	Min.	Max.	Min.	Max.	350	400	490	530	560	580	600	
FPR-550-3-400	558.8	22	26	10	-48	-1 7/8	45	168	170	900	2500	79.4	181.5	2020	2020						M8–M24
FPR-550-4-400	558.8	22	33	10	-38	-1 1/2	55	168	190	900	2500	102.0	249.7	3160	3160						M8–M30
FPR-550-5-400	558.8	22	39	12	-28	-1 1/8	65	188	220	900	2500	125.3	286.6	4560	4560						M12–M36
FPR-550-6-400	558.8	22	52	15	-3	-1/8	85	208	250	1000	2500	170.2	399.0	7300	7300						M20–M48
FPR-550-7-400	558.8	22	60	20	12	1/2	100	208	290	1000	2500	216.4	514.9	10680	10680						M24–M56
FPR-550-8-400	558.8	22	68	25	32	1 1/4	115	228	330	1000	2500	264.3	598.8	14800	14800						M36–M64
FPR-550-9-400	558.8	22	76	25	11	7/16	130	294	360	1100	2500	365.3	773.3	19300	19300						M36–M72
FPR-550-10-400	558.8	22	86	30	26	1	140	294	400	1100	2500	409.0	951.0	26700	26700						M36–M80
FPR-550-11-400	558.8	22	86	35	-10	-3/8	140	330	450	1100	2500	536.6	1208.1	36000	36000						M36–M80
FPR-550-12-400	558.8	22	86	40	-10	-3/8	140	360	500	1100	2500	585.2	1339.0	46050	46050						M36–M80
FPR-550-13-400	558.8	22	86	40	-46	-1 13/16	140	416	510	1200	2500	777.4	1697.4	56250	56250						M36–M80
FPR-550-3-490	558.8	22	26	10	-48	-1 7/8	45	168	170	900	2500	79.4	181.5	2020	2020	2020	1310	790	570	480	M8–M24
FPR-550-4-490	558.8	22	33	10	-38	-1 1/2	55	168	190	900	2500	102.0	249.7	3160	3160	3160	2050	1230	880	760	M8–M30
FPR-550-5-490	558.8	22	39	12	-28	-1 1/8	65	188	220	900	2500	125.3	286.6	4560	4560	4560	2960	1780	1280	1090	M12–M36
FPR-550-6-490	558.8	22	52	15	-3	-1/8	85	208	250	1000	2500	170.2	399.0	7300	7300	7300	4750	2850	2040	1750	M20–M48
FPR-550-7-490	558.8	22	60	20	12	1/2	100	208	300	1000	2500	216.4	470.3	10680	10680	10680	6940	4170	2990	2560	M24–M56
FPR-550-8-490	558.8	22	68	25	32	1 1/4	115	228	330	1000	2500	264.3	598.8	14800	14800	14800	9620	5770	4140	3550	M36–M64
FPR-550-9-490	558.8	22	76	25	11	7/16	130	294	360	1100	2500	365.3	773.3	19300	19300	19300	12550	7530	5400	4630	M36–M72
FPR-550-10-490	558.8	22	86	30	26	1	140	294	390	1100	2500	409.0	933.8	26700	26700	26700	17360	10410	7480	6410	M36–M80
FPR-550-11-490	558.8	22	86	35	-10	-3/8	140	330	450	1100	2500	536.6	1086.9	36000	36000	36000	23400	14040	10080	8640	M36–M80
FPR-550-12-490	558.8	22	86	40	-10	-3/8	140	360	490	1100	2500	585.2	1319.7	46050	46050	46050	29930	17960	12890	11050	M36–M80
FPR-550-13-490	558.8	22	86	40	-46	-1 13/16	140	416	510	1200	2500	768.8	1697.4	56250	56250	56250	36560	21940	15750	13500	M36–M80
FPR-550-3-530	558.8	22	26	10	-48	-1 7/8	45	168	180	900	2500	84.3	188.7	2020	2020	2020	2020	1210	890	730	M8–M24
FPR-550-4-530	558.8	22	33	10	-38	-1 1/2	55	168	200	900	2500	107.0	258.8	3160	3160	3160	3160	1900	1390	1140	M8–M30
FPR-550-5-530	558.8	22	39	12	-28	-1 1/8	65	188	240	900	2500	145.0	304.6	4560	4560	4560	4560	2740	2010	1640	M12–M36
FPR-550-6-530	558.8	22	52	15	-3	-1/8	85	208	270	1000	2500	190.4	420.8	7300	7300	7300	7300	4380	3210	2630	M20–M48
FPR-550-7-530	558.8	22	60	20	12	1/2	100	208	300	1000	2500	239.1	528.0	10680	10680	10680	10680	6410	4700	3840	M24–M56
FPR-550-8-530	558.8	22	68	25	32	1 1/4	115	240	350	1000	2500	287.2	624.4	14800	14800	14800	14800	8880	6510	5330	M36–M64
FPR-550-9-530	558.8	22	76	25	11	7/16	130	294	370	1100	2500	391.6	787.8	19300	19300	19300	19300	11580	8490	6950	M36–M72
FPR-550-10-530	558.8	22	86	30	26	1	140	300	420	1100	2500	435.3	1000.2	26700	26700	26700	26700	16020	11750	9610	M36–M80
FPR-550-11-530	558.8	22	86	35	-10	-3/8	140	330	460	1100	2500	544.1	1227.3	36000	36000	36000	36000	21600	15840	12960	M36–M80
FPR-550-12-530	558.8	22	86	40	-10	-3/8	140	370	470	1200	2500	719.4	1515.5	46050	46050	46050	46050	27630	20260	16580	M36–M80
FPR-550-13-530	558.8	22	86	40	-46	-1 13/16	140	416	520	1200	2500	786.8	1720.9	56250	56250	56250	56250	33750	24750	20250	M36–M80
FPR-550-3-560	558.8	22	26	10	-48	-1 7/8	45	168	180	900	2500	104.4	227.3	2020	2020	2020	2020	2020	1580	1170	M8–M24
FPR-550-4-560	558.8	22	33	10	-38	-1 1/2	55	168	220	900	2500	120.5	276.7	3160	3160	3160	3160	3160	2460	1830	M8–M30
FPR-550-5-560	558.8	22	39	12	-28	-1 1/8	65	188	240	900	2500	151.8	370.7	4560	4560	4560	4560	4560	3560	2640	M12–M36
FPR-550-6-560	558.8	22	52	15	-3	-1/8	85	208	300	1000	2500	218.4	467.8	7300	7300	7300	7300	7300	5690	4230	M20–M48
FPR-550-7-560	558.8	22	60	20	12	1/2	100	230	330	1000	2500	252.8	580.0	10680	10680	10680	10680	10680	8330	6190	M24–M56
FPR-550-8-560	558.8	22	68	25	32	1 1/4	115	250	360	1100	2500	337.6	733.3	14800	14800	14800	14800	14800	11540	8580	M36–M64
FPR-550-9-560	558.8	22	76	25	11	7/16	130	294	380	1100	2500	403.9	912.3	19300	19300	19300	19300	19300	15050	11190	M36–M72
FPR-550-10-560	558.8	22	86	30	26	1	140	310	440	1100	2500	504.2	1033.8	26700	26700	26700	26700	26700	20830	15490	M36–M80
FPR-550-11-560	558.8	22	86	35	-10	-3/8	140	350	490	1100	2500	565.4	1283.0	36000	36000	36000	36000	36000	28080	20880	M36–M80
FPR-550-12-560	558.8	22	86	40	-10	-3/8	140	400	500	1200	2500	746.3	1617.7	46050	46050	46050	46050	46050	35920	26710	M36–M80
FPR-550-13-560	558.8	22	86	40	-46	-1 13/16	140	416	540	1200	2500	911.1	1766.8	56250	56250	56250	56250	56250	43880	32630	M36–M80
FPR-550-3-600	558.8	22	26	10	-48	-1 7/8	45	168	220	900	2500	120.4	276.5	2020	2020	2020	2020	2020	2020	2020	M8–M24
FPR-550-4-600	558.8	22	33	10	-38	-1 1/2	55	180	250	900	2500	146.8	369.8	3160	3160	3160	3160	3160	3160	3160	M8–M30
FPR-550-5-600	558.8	22	39	12	-28	-1 1/8	65	188	300	900	2500	192.8	449.7	4560	4560	4560	4560	4560	4560	4560	M12–M36
FPR-550-6-600	558.8	22	52	15	-3	-1/8	85	240	340	1000	2500	268.7	590.6	7300	7300	7300	7300	7300	7300	7300	M20–M48
FPR-550-7-600	558.8	22	60	20	12	1/2	100	260	380	1000	2500	331.0	741.9	10680	10680	10680	10680	10680	10680	10680	M24–M56
FPR-550-8-600	558.8	22	68	25	32	1 1/4	115	280	410	1100	2500	415.2	917.0	14800	14800	14800	14800	14800	14800	14800	M36–M64
FPR-550-9-600	558.8	22	76	25	11	7/16	130	330	430	1100	2500	513.5	1097.3	19300	19300	19300	19300	19300	19300	19300	M36–M72
FPR-550-10-600	558.8	22	86	30	26	1	140	350	500	1100	2500	620.3	1265.1	26700	26700	26700	26700	26700	26700	26700	M36–M80
FPR-550-11-600	558.8	22	86	35	-10	-3/8	140	400	510	1200	2500	790.2	1595.7	36000	36000	36000	36000	36000	36000	36000	M36–M80
FPR-550-12-600	558.8	22	86	40	-10	-3/8	140	450	580	1200	2500	905.8	1833.5	46050	46050	46050	46050	46050	46050	46050	M36–M80
FPR-550-13-600	558.8	22	86	40	-46	-1 13/16	140	460	570	1200	2500	1051.3	2124.4	56250	56250	56250	56250	56250	56250	56250	M36–M80

FPR RISER CLAMP FLAT PLATE TYPE

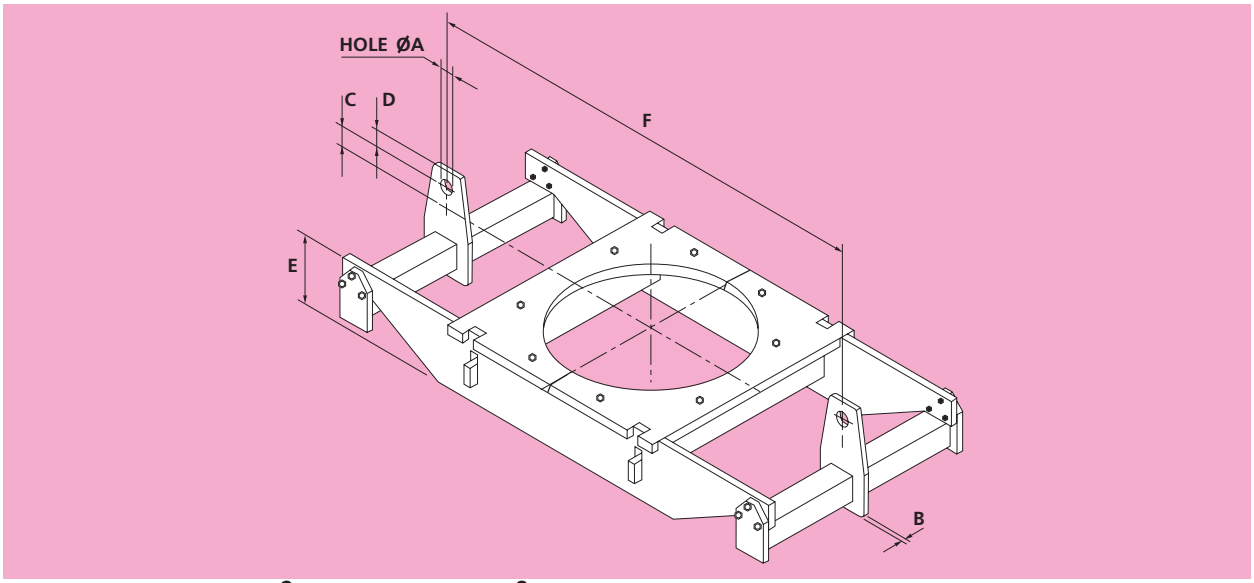

Material: Carbon Steel to 400°C Alloy Steel above 400°C End Beams and Lugs: Carbon Steel. Order by Part No. and Rod Centres "F"

Part Number	Pipe O/D		A	B	C		D	E		F		Weight kgf		Load Capacity (kgf) at Temperature C							Compatible with Rod
	mm	in	mm	mm	mm	in	mm	Min.	Max.	Min.	Max.	Min.	Max.	350	400	490	530	560	580	600	Sizes
FPR-600-3-400	609.6	24	26	10	-48	-1 7/8	45	168	168	900	2500	87.7	183.9	2020	2020						M8–M24
FPR-600-4-400	609.6	24	33	10	-38	-1 1/2	55	188	190	1000	2500	125.3	271.8	3160	3160						M8–M30
FPR-600-5-400	609.6	24	39	12	-28	-1 1/8	65	188	220	1000	2500	144.0	299.9	4560	4560						M12–M36
FPR-600-6-400	609.6	24	52	15	-3	-1/8	85	208	250	1000	2500	189.2	416.6	7300	7300						M20–M48
FPR-600-7-400	609.6	24	60	20	12	1/2	100	208	300	1100	2500	244.8	490.9	10680	10680						M24–M56
FPR-600-8-400	609.6	24	68	25	32	1 1/4	115	230	330	1100	2500	297.1	623.4	14800	14800						M36–M64
FPR-600-9-400	609.6	24	76	25	11	7/16	130	294	350	1200	2500	405.8	787.0	19300	19300						M36–M72
FPR-600-10-400	609.6	24	86	30	26	1	140	294	390	1200	2500	470.4	967.5	26700	26700						M36–M80
FPR-600-11-400	609.6	24	86	35	-10	-3/8	140	330	440	1200	2500	596.1	1235.3	36000	36000						M36–M80
FPR-600-12-400	609.6	24	86	40	-10	-3/8	140	360	490	1200	2500	645.8	1366.1	46050	46050						M36–M80
FPR-600-13-400	609.6	24	86	40	-46	-1 13/16	140	416	510	1200	2500	805.3	1753.5	56250	56250						M36–M80
FPR-600-3-490	609.6	24	26	10	-48	-1 7/8	45	168	168	900	2500	87.7	183.9	2020	2020	2020	1310	790	570	480	M8–M24
FPR-600-4-490	609.6	24	33	10	-38	-1 1/2	55	188	200	1000	2500	125.3	236.4	3160	3160	3160	2050	1230	880	760	M8–M30
FPR-600-5-490	609.6	24	39	12	-28	-1 1/8	65	188	220	1000	2500	144.0	299.9	4560	4560	4560	2960	1780	1280	1090	M12–M36
FPR-600-6-490	609.6	24	52	15	-3	-1/8	85	208	250	1000	2500	189.2	416.6	7300	7300	7300	4750	2850	2040	1750	M20–M48
FPR-600-7-490	609.6	24	60	20	12	1/2	100	208	300	1100	2500	244.8	490.9	10680	10680	10680	6940	4170	2990	2560	M24–M56
FPR-600-8-490	609.6	24	68	25	32	1 1/4	115	230	330	1100	2500	297.1	623.4	14800	14800	14800	9620	5770	4140	3550	M36–M64
FPR-600-9-490	609.6	24	76	25	11	7/16	130	294	350	1200	2500	405.8	787.0	19300	19300	19300	12550	7530	5400	4630	M36–M72
FPR-600-10-490	609.6	24	86	30	26	1	140	294	390	1200	2500	453.9	967.5	26700	26700	26700	17360	10410	7480	6410	M36–M80
FPR-600-11-490	609.6	24	86	35	-10	-3/8	140	330	440	1200	2500	596.1	1235.3	36000	36000	36000	23400	14040	10080	8640	M36–M80
FPR-600-12-490	609.6	24	86	40	-10	-3/8	140	360	490	1200	2500	645.8	1366.1	46050	46050	46050	29930	17960	12890	11050	M36–M80
FPR-600-13-490	609.6	24	86	40	-46	-1 13/16	140	416	500	1200	2500	805.3	1730.9	56250	56250	56250	36560	21940	15750	13500	M36–M80
FPR-600-3-530	609.6	24	26	10	-48	-1 7/8	45	168	180	1000	2500	97.6	198.3	2020	2020	2020	2020	1210	890	730	M8–M24
FPR-600-4-530	609.6	24	33	10	-38	-1 1/2	55	188	200	1000	2500	128.0	281.1	3160	3160	3160	3160	1900	1390	1140	M8–M30
FPR-600-5-530	609.6	24	39	12	-28	-1 1/8	65	188	240	1000	2500	166.6	333.9	4560	4560	4560	4560	2740	2010	1640	M12–M36
FPR-600-6-530	609.6	24	52	15	-3	-1/8	85	208	270	1000	2500	211.9	455.1	7300	7300	7300	7300	4380	3210	2630	M20–M48
FPR-600-7-530	609.6	24	60	20	12	1/2	100	210	300	1100	2500	270.7	565.8	10680	10680	10680	10680	6410	4700	3840	M24–M56
FPR-600-8-530	609.6	24	68	25	32	1 1/4	115	250	350	1100	2500	323.2	665.8	14800	14800	14800	14800	8880	6510	5330	M36–M64
FPR-600-9-530	609.6	24	76	25	11	7/16	130	294	370	1200	2500	435.5	834.2	19300	19300	19300	19300	11580	8490	6950	M36–M72
FPR-600-10-530	609.6	24	86	30	26	1	140	294	410	1200	2500	505.6	1019.6	26700	26700	26700	26700	16020	11750	9610	M36–M80
FPR-600-11-530	609.6	24	86	35	-10	-3/8	140	330	450	1200	2500	603.5	1253.8	36000	36000	36000	36000	21600	15840	12960	M36–M80
FPR-600-12-530	609.6	24	86	40	-10	-3/8	140	360	460	1200	2500	756.0	1542.3	46050	46050	46050	46050	27630	20260	16580	M36–M80
FPR-600-13-530	609.6	24	86	40	-46	-1 13/16	140	416	510	1200	2500	823.6	1753.5	56250	56250	56250	56250	33750	24750	20250	M36–M80
FPR-600-3-560	609.6	24	26	10	-48	-1 7/8	45	168	200	1000	2500	117.9	227.9	2020	2020	2020	2020	2020	1580	1170	M8–M24
FPR-600-4-560	609.6	24	33	10	-38	-1 1/2	55	188	220	1000	2500	143.4	299.3	3160	3160	3160	3160	3160	2460	1830	M8–M30
FPR-600-5-560	609.6	24	39	12	-28	-1 1/8	65	188	240	1000	2500	170.2	387.4	4560	4560	4560	4560	4560	3560	2640	M12–M36
FPR-600-6-560	609.6	24	52	15	-3	-1/8	85	208	300	1000	2500	236.7	488.4	7300	7300	7300	7300	7300	5690	4230	M20–M48
FPR-600-7-560	609.6	24	60	20	12	1/2	100	240	330	1100	2500	301.8	604.2	10680	10680	10680	10680	10680	8330	6190	M24–M56
FPR-600-8-560	609.6	24	68	25	32	1 1/4	115	250	350	1100	2500	379.3	746.5	14800	14800	14800	14800	14800	11540	8580	M36–M64
FPR-600-9-560	609.6	24	76	25	11	7/16	130	300	400	1200	2500	472.1	879.7	19300	19300	19300	19300	19300	15050	11190	M36–M72
FPR-600-10-560	609.6	24	86	30	26	1	140	320	440	1200	2500	562.1	1071.0	26700	26700	26700	26700	26700	20830	15490	M36–M80
FPR-600-11-560	609.6	24	86	35	-10	-3/8	140	340	480	1200	2500	673.7	1311.0	36000	36000	36000	36000	36000	28080	20880	M36–M80
FPR-600-12-560	609.6	24	86	40	-10	-3/8	140	380	490	1200	2500	774.1	1649.5	46050	46050	46050	46050	46050	35920	26710	M36–M80
FPR-600-13-560	609.6	24	86	40	-46	-1 13/16	140	420	540	1300	2500	997.8	1823.8	56250	56250	56250	56250	56250	43880	32630	M36–M80
FPR-600-3-600	609.6	24	26	10	-48	-1 7/8	45	168	220	1000	2500	135.1	289.4	2020	2020	2020	2020	2020	2020	2020	M8–M24
FPR-600-4-600	609.6	24	33	10	-38	-1 1/2	55	188	250	1000	2500	173.4	397.5	3160	3160	3160	3160	3160	3160	3160	M8–M30
FPR-600-5-600	609.6	24	39	12	-28	-1 1/8	65	190	290	1000	2500	220.1	458.4	4560	4560	4560	4560	4560	4560	4560	M12–M36
FPR-600-6-600	609.6	24	52	15	-3	-1/8	85	250	340	1000	2500	296.8	615.0	7300	7300	7300	7300	7300	7300	7300	M20–M48
FPR-600-7-600	609.6	24	60	20	12	1/2	100	270	370	1100	2500	373.3	755.2	10680	10680	10680	10680	10680	10680	10680	M24–M56
FPR-600-8-600	609.6	24	68	25	32	1 1/4	115	280	400	1100	2500	446.3	952.2	14800	14800	14800	14800	14800	14800	14800	M36–M64
FPR-600-9-600	609.6	24	76	25	11	7/16	130	340	430	1200	2500	572.4	1172.2	19300	19300	19300	19300	19300	19300	19300	M36–M72
FPR-600-10-600	609.6	24	86	30	26	1	140	360	500	1200	2500	689.6	1310.3	26700	26700	26700	26700	26700	26700	26700	M36–M80
FPR-600-11-600	609.6	24	86	35	-10	-3/8	140	390	510	1200	2500	864.1	1651.4	36000	36000	36000	36000	36000	36000	36000	M36–M80
FPR-600-12-600	609.6	24	86	40	-10	-3/8	140	440	570	1200	2500	986.2	1872.6	46050	46050	46050	46050	46050	46050	46050	M36–M80
FPR-600-13-600	609.6	24	86	40	-46	-1 13/16	140	470	560	1300	2500	1151.7	2162.9	56250	56250	56250	56250	56250	56250	56250	M36–M80

FPR RISER CLAMP FLAT PLATE TYPE

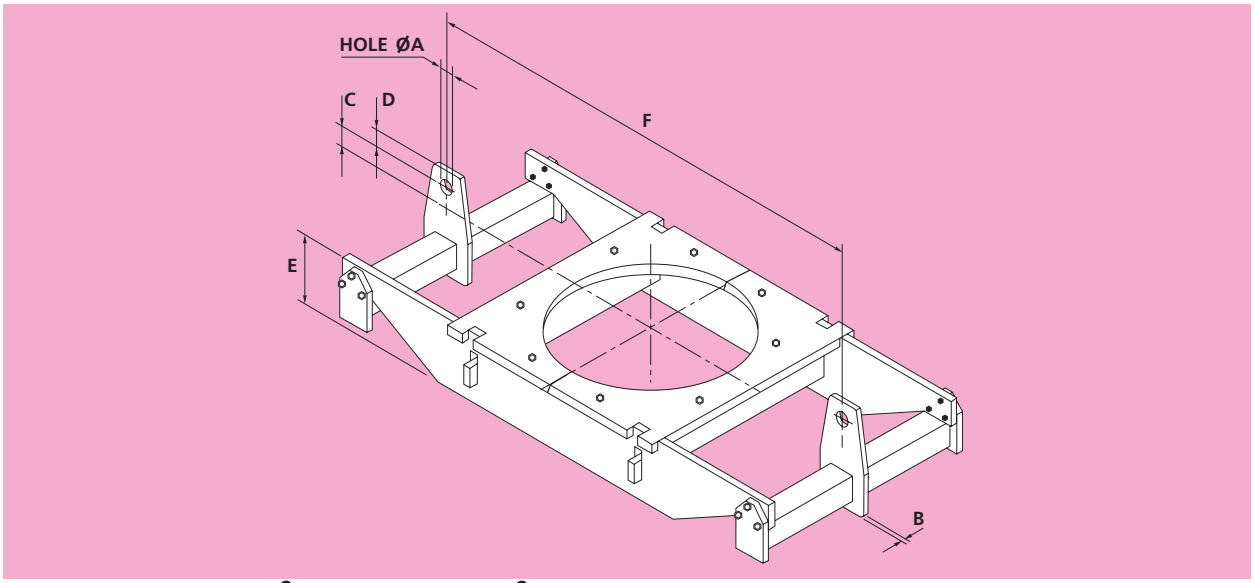

Material: Carbon Steel to 400°C Alloy Steel above 400°C End Beams and Lugs: Carbon Steel. Order by Part No. and Rod Centres "F"

Part Number	Pipe O/D		A	B	C		D	E		F		Weight kg		Load Capacity (kg) at Temperature C							Compatible with Rod Sizes
	mm	in	mm	mm	mm	in	mm	Min.	Max.	Min.	Max.	Min.	Max.	350	400	490	530	560	580	600	
FPR-650-3-400	660.4	26	26	10	-48	-1 7/8	45	168	180	1000	3000	98.0	229.1	2020	2020						M8–M24
FPR-650-4-400	660.4	26	33	10	-38	-1 1/2	55	188	200	1000	3000	137.0	323.7	3160	3160						M8–M30
FPR-650-5-400	660.4	26	39	12	-28	-1 1/8	65	188	240	1100	3000	159.2	367.0	4560	4560						M12–M36
FPR-650-6-400	660.4	26	52	15	-3	-1/8	85	208	280	1100	3000	208.7	517.3	7300	7300						M20–M48
FPR-650-7-400	660.4	26	60	20	12	1/2	100	228	310	1100	3000	281.5	663.3	10680	10680						M24–M56
FPR-650-8-400	660.4	26	68	25	32	1 1/4	115	240	340	1200	3000	331.3	821.4	14800	14800						M36–M64
FPR-650-9-400	660.4	26	76	25	11	7/16	130	294	390	1200	3000	425.3	969.4	19300	19300						M36–M72
FPR-650-10-400	660.4	26	86	30	26	1	140	300	440	1200	3000	519.1	1236.5	26700	26700						M36–M80
FPR-650-11-400	660.4	26	86	35	-10	-3/8	140	330	490	1200	3000	635.6	1520.3	36000	36000						M36–M80
FPR-650-12-400	660.4	26	86	40	-10	-3/8	140	380	510	1300	3000	846.3	1968.4	46050	46050						M36–M80
FPR-650-13-400	660.4	26	86	40	-46	-1 13/16	140	416	550	1300	3000	880.2	2097.9	56250	56250						M36–M80
FPR-650-3-490	660.4	26	26	10	-48	-1 7/8	45	168	180	1000	3000	98.0	229.1	2020	2020	2020	1310	790	570	480	M8–M24
FPR-650-4-490	660.4	26	33	10	-38	-1 1/2	55	188	200	1000	3000	137.0	323.7	3160	3160	3160	2050	1230	880	760	M8–M30
FPR-650-5-490	660.4	26	39	12	-28	-1 1/8	65	188	240	1100	3000	159.2	367.0	4560	4560	4560	2960	1780	1280	1090	M12–M36
FPR-650-6-490	660.4	26	52	15	-3	-1/8	85	208	270	1100	3000	208.7	504.2	7300	7300	7300	4750	2850	2040	1750	M20–M48
FPR-650-7-490	660.4	26	60	20	12	1/2	100	228	310	1100	3000	281.5	663.3	10680	10680	10680	6940	4170	2990	2560	M24–M56
FPR-650-8-490	660.4	26	68	25	32	1 1/4	115	230	340	1200	3000	325.6	821.4	14800	14800	14800	9620	5770	4140	3550	M36–M64
FPR-650-9-490	660.4	26	76	25	11	7/16	130	294	390	1200	3000	425.3	969.4	19300	19300	19300	12550	7530	5400	4630	M36–M72
FPR-650-10-490	660.4	26	86	30	26	1	140	300	430	1200	3000	519.1	1216.3	26700	26700	26700	17360	10410	7480	6410	M36–M80
FPR-650-11-490	660.4	26	86	35	-10	-3/8	140	330	480	1200	3000	635.6	1498.7	36000	36000	36000	23400	14040	10080	8640	M36–M80
FPR-650-12-490	660.4	26	86	40	-10	-3/8	140	380	490	1300	3000	787.4	1870.6	46050	46050	46050	29930	17960	12890	11050	M36–M80
FPR-650-13-490	660.4	26	86	40	-46	-1 13/16	140	416	550	1300	3000	880.2	2097.9	56250	56250	56250	36560	21940	15750	13500	M36–M80
FPR-650-3-530	660.4	26	26	10	-48	-1 7/8	45	168	190	1000	3000	106.4	237.4	2020	2020	2020	2020	1210	890	730	M8–M24
FPR-650-4-530	660.4	26	33	10	-38	-1 1/2	55	188	220	1100	3000	154.4	345.1	3160	3160	3160	3160	1900	1390	1140	M8–M30
FPR-650-5-530	660.4	26	39	12	-28	-1 1/8	65	188	240	1100	3000	184.9	446.6	4560	4560	4560	4560	2740	2010	1640	M12–M36
FPR-650-6-530	660.4	26	52	15	-3	-1/8	85	208	300	1100	3000	234.5	562.1	7300	7300	7300	7300	4380	3210	2630	M20–M48
FPR-650-7-530	660.4	26	60	20	12	1/2	100	228	330	1100	3000	310.2	712.7	10680	10680	10680	10680	6410	4700	3840	M24–M56
FPR-650-8-530	660.4	26	68	25	32	1 1/4	115	230	360	1200	3000	383.7	875.9	14800	14800	14800	14800	8880	6510	5330	M36–M64
FPR-650-9-530	660.4	26	76	25	11	7/16	130	294	390	1200	3000	464.2	1100.3	19300	19300	19300	19300	11580	8490	6950	M36–M72
FPR-650-10-530	660.4	26	86	30	26	1	140	294	450	1200	3000	548.6	1255.9	26700	26700	26700	26700	16020	11750	9610	M36–M80
FPR-650-11-530	660.4	26	86	35	-10	-3/8	140	340	500	1200	3000	651.4	1542.9	36000	36000	36000	36000	21600	15840	12960	M36–M80
FPR-650-12-530	660.4	26	86	40	-10	-3/8	140	380	520	1300	3000	855.7	1996.0	46050	46050	46050	46050	27630	20260	16580	M36–M80
FPR-650-13-530	660.4	26	86	40	-46	-1 13/16	140	416	560	1300	3000	967.3	2125.5	56250	56250	56250	56250	33750	24750	20250	M36–M80
FPR-650-3-560	660.4	26	26	10	-48	-1 7/8	45	168	200	1000	3000	129.3	313.7	2020	2020	2020	2020	2020	1580	1170	M8–M24
FPR-650-4-560	660.4	26	33	10	-38	-1 1/2	55	188	240	1100	3000	184.2	366.4	3160	3160	3160	3160	3160	2460	1830	M8–M30
FPR-650-5-560	660.4	26	39	12	-28	-1 1/8	65	188	260	1100	3000	192.9	472.3	4560	4560	4560	4560	4560	3560	2640	M12–M36
FPR-650-6-560	660.4	26	52	15	-3	-1/8	85	208	300	1100	3000	266.2	630.5	7300	7300	7300	7300	7300	5690	4230	M20–M48
FPR-650-7-560	660.4	26	60	20	12	1/2	100	250	330	1100	3000	343.8	799.9	10680	10680	10680	10680	10680	8330	6190	M24–M56
FPR-650-8-560	660.4	26	68	25	32	1 1/4	115	260	390	1200	3000	422.8	927.8	14800	14800	14800	14800	14800	11540	8580	M36–M64
FPR-650-9-560	660.4	26	76	25	11	7/16	130	300	410	1200	3000	503.6	1139.9	19300	19300	19300	19300	19300	15050	11190	M36–M72
FPR-650-10-560	660.4	26	86	30	26	1	140	330	460	1200	3000	618.1	1425.3	26700	26700	26700	26700	26700	20830	15490	M36–M80
FPR-650-11-560	660.4	26	86	35	-10	-3/8	140	360	480	1300	3000	789.4	1764.1	36000	36000	36000	36000	36000	28080	20880	M36–M80
FPR-650-12-560	660.4	26	86	40	-10	-3/8	140	400	540	1300	3000	885.5	2050.0	46050	46050	46050	46050	46050	35920	26710	M36–M80
FPR-650-13-560	660.4	26	86	40	-46	-1 13/16	140	416	600	1300	3000	1041.7	2277.3	56250	56250	56250	56250	56250	43880	32630	M36–M80
FPR-650-3-600	660.4	26	26	10	-48	-1 7/8	45	168	240	1000	3000	171.8	356.1	2020	2020	2020	2020	2020	2020	2020	M8–M24
FPR-650-4-600	660.4	26	33	10	-38	-1 1/2	55	200	270	1100	3000	217.9	484.3	3160	3160	3160	3160	3160	3160	3160	M8–M30
FPR-650-5-600	660.4	26	39	12	-28	-1 1/8	65	200	300	1100	3000	248.8	610.5	4560	4560	4560	4560	4560	4560	4560	M12–M36
FPR-650-6-600	660.4	26	52	15	-3	-1/8	85	230	340	1100	3000	354.8	797.7	7300	7300	7300	7300	7300	7300	7300	M20–M48
FPR-650-7-600	660.4	26	60	20	12	1/2	100	280	380	1200	3000	432.3	1010.4	10680	10680	10680	10680	10680	10680	10680	M24–M56
FPR-650-8-600	660.4	26	68	25	32	1 1/4	115	290	440	1200	3000	497.2	1173.7	14800	14800	14800	14800	14800	14800	14800	M36–M64
FPR-650-9-600	660.4	26	76	25	11	7/16	130	340	470	1200	3000	610.7	1430.8	19300	19300	19300	19300	19300	19300	19300	M36–M72
FPR-650-10-600	660.4	26	86	30	26	1	140	380	480	1300	3000	781.4	1730.8	26700	26700	26700	26700	26700	26700	26700	M36–M80
FPR-650-11-600	660.4	26	86	35	-10	-3/8	140	410	560	1300	3000	960.8	2021.2	36000	36000	36000	36000	36000	36000	36000	M36–M80
FPR-650-12-600	660.4	26	86	40	-10	-3/8	140	430	560	1300	3000	1147.5	2436.3	46050	46050	46050	46050	46050	46050	46050	M36–M80
FPR-650-13-600	660.4	26	86	40	-46	-1 13/16	140	460	560	1300	3000	1201.8	2773.3	56250	56250	56250	56250	56250	56250	56250	M36–M80

FPR RISER CLAMP FLAT PLATE TYPE

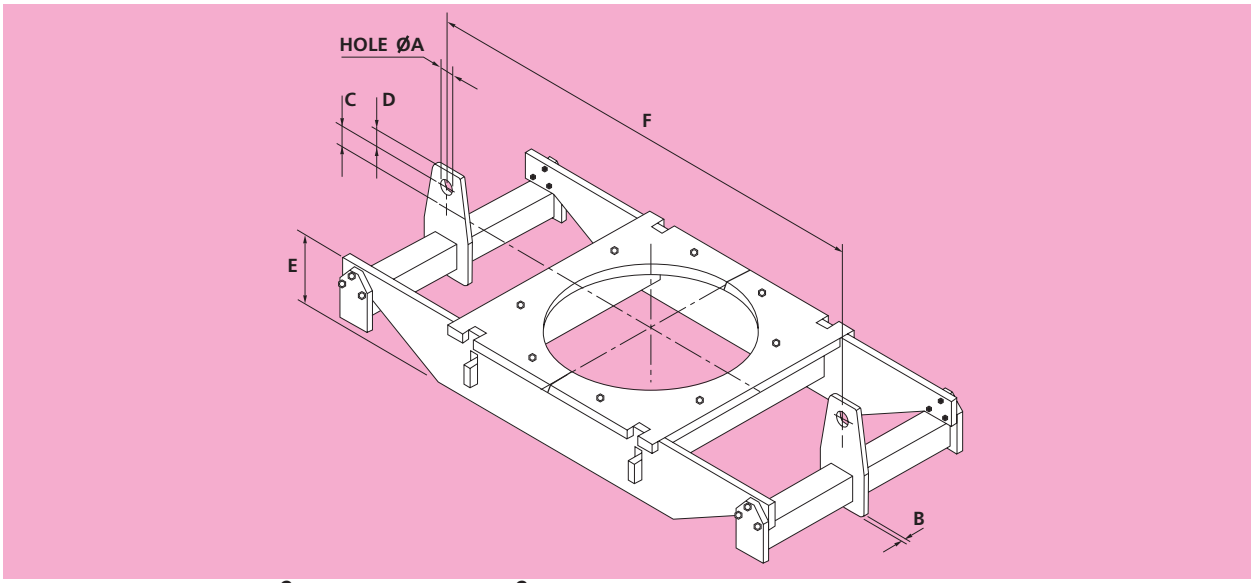

Material: Carbon Steel to 400°C Alloy Steel above 400°C End Beams and Lugs: Carbon Steel. Order by Part No. and Rod Centres "F"

Part Number	Pipe O/D		A	B	C		D	E		F		Weight kgf		Load Capacity (kgf) at Temperature C							Compatible with Rod
	mm	in	mm	mm	mm	in	mm	Min.	Max.	Min.	Max.	Min.	Max.	350	400	490	530	560	580	600	Sizes
FPR-700-3-400	711.2	28	26	10	-48	-1 7/8	45	168	180	1100	3000	117.8	239.3	2020	2020						M8–M24
FPR-700-4-400	711.2	28	33	10	-38	-1 1/2	55	188	200	1100	3000	154.6	337.7	3160	3160						M8–M30
FPR-700-5-400	711.2	28	39	12	-28	-1 1/8	65	188	240	1100	3000	176.0	381.4	4560	4560						M12–M36
FPR-700-6-400	711.2	28	52	15	-3	-1/8	85	208	270	1100	3000	253.6	523.1	7300	7300						M20–M48
FPR-700-7-400	711.2	28	60	20	12	1/2	100	228	310	1200	3000	334.0	686.3	10680	10680						M24–M56
FPR-700-8-400	711.2	28	68	25	32	1 1/4	115	258	340	1200	3000	403.5	878.5	14800	14800						M36–M64
FPR-700-9-400	711.2	28	76	25	11	7/16	130	294	390	1300	3000	497.4	1001.1	19300	19300						M36–M72
FPR-700-10-400	711.2	28	86	30	26	1	140	294	430	1300	3000	587.0	1256.1	26700	26700						M36–M80
FPR-700-11-400	711.2	28	86	35	-10	-3/8	140	360	480	1300	3000	720.0	1579.5	36000	36000						M36–M80
FPR-700-12-400	711.2	28	86	40	-10	-3/8	140	380	500	1400	3000	922.9	2000.8	46050	46050						M36–M80
FPR-700-13-400	711.2	28	86	40	-46	-1 13/16	140	416	550	1400	3000	986.9	2176.9	56250	56250						M36–M80
FPR-700-3-490	711.2	28	26	10	-48	-1 7/8	45	168	180	1100	3000	114.6	239.3	2020	2020	2020	1310	790	570	480	M8–M24
FPR-700-4-490	711.2	28	33	10	-38	-1 1/2	55	188	200	1100	3000	154.6	337.7	3160	3160	3160	2050	1230	880	760	M8–M30
FPR-700-5-490	711.2	28	39	12	-28	-1 1/8	65	188	240	1100	3000	176.0	381.4	4560	4560	4560	2960	1780	1280	1090	M12–M36
FPR-700-6-490	711.2	28	52	15	-3	-1/8	85	208	270	1100	3000	229.1	523.1	7300	7300	7300	4750	2850	2040	1750	M20–M48
FPR-700-7-490	711.2	28	60	20	12	1/2	100	228	300	1200	3000	307.8	671.3	10680	10680	10680	6940	4170	2990	2560	M24–M56
FPR-700-8-490	711.2	28	68	25	32	1 1/4	115	258	340	1200	3000	403.5	878.5	14800	14800	14800	9620	5770	4140	3550	M36–M64
FPR-700-9-490	711.2	28	76	25	11	7/16	130	294	380	1300	3000	468.3	983.8	19300	19300	19300	12550	7530	5400	4630	M36–M72
FPR-700-10-490	711.2	28	86	30	26	1	140	300	430	1300	3000	564.1	1256.1	26700	26700	26700	17360	10410	7480	6410	M36–M80
FPR-700-11-490	711.2	28	86	35	-10	-3/8	140	360	470	1300	3000	720.0	1556.5	36000	36000	36000	23400	14040	10080	8640	M36–M80
FPR-700-12-490	711.2	28	86	40	-10	-3/8	140	380	500	1400	3000	912.9	2000.8	46050	46050	46050	29930	17960	12890	11050	M36–M80
FPR-700-13-490	711.2	28	86	40	-46	-1 13/16	140	416	540	1400	3000	976.1	2150.3	56250	56250	56250	36560	21940	15750	13500	M36–M80
FPR-700-3-530	711.2	28	26	10	-48	-1 7/8	45	168	190	1100	3000	120.7	247.7	2020	2020	2020	2020	1210	890	730	M8–M24
FPR-700-4-530	711.2	28	33	10	-38	-1 1/2	55	188	220	1100	3000	171.4	359.3	3160	3160	3160	3160	1900	1390	1140	M8–M30
FPR-700-5-530	711.2	28	39	12	-28	-1 1/8	65	188	240	1100	3000	204.3	464.5	4560	4560	4560	4560	2740	2010	1640	M12–M36
FPR-700-6-530	711.2	28	52	15	-3	-1/8	85	208	300	1200	3000	281.0	584.1	7300	7300	7300	7300	4380	3210	2630	M20–M48
FPR-700-7-530	711.2	28	60	20	12	1/2	100	230	330	1200	3000	345.2	738.6	10680	10680	10680	10680	6410	4700	3840	M24–M56
FPR-700-8-530	711.2	28	68	25	32	1 1/4	115	258	360	1300	3000	451.1	936.3	14800	14800	14800	14800	8880	6510	5330	M36–M64
FPR-700-9-530	711.2	28	76	25	11	7/16	130	294	380	1300	3000	511.8	1116.3	19300	19300	19300	19300	11580	8490	6950	M36–M72
FPR-700-10-530	711.2	28	86	30	26	1	140	300	450	1300	3000	603.9	1296.1	26700	26700	26700	26700	16020	11750	9610	M36–M80
FPR-700-11-530	711.2	28	86	35	-10	-3/8	140	360	490	1300	3000	737.2	1601.4	36000	36000	36000	36000	21600	15840	12960	M36–M80
FPR-700-12-530	711.2	28	86	40	-10	-3/8	140	380	510	1400	3000	933.8	2027.4	46050	46050	46050	46050	27630	20260	16580	M36–M80
FPR-700-13-530	711.2	28	86	40	-46	-1 13/16	140	416	560	1400	3000	1127.6	2204.8	56250	56250	56250	56250	33750	24750	20250	M36–M80
FPR-700-3-560	711.2	28	26	10	-48	-1 7/8	45	168	200	1100	3000	146.5	327.3	2020	2020	2020	2020	2020	1580	1170	M8–M24
FPR-700-4-560	711.2	28	33	10	-38	-1 1/2	55	188	250	1100	3000	199.8	412.2	3160	3160	3160	3160	3160	2460	1830	M8–M30
FPR-700-5-560	711.2	28	39	12	-28	-1 1/8	65	190	260	1100	3000	212.6	490.4	4560	4560	4560	4560	4560	3560	2640	M12–M36
FPR-700-6-560	711.2	28	52	15	-3	-1/8	85	210	300	1200	3000	318.2	652.9	7300	7300	7300	7300	7300	5690	4230	M20–M48
FPR-700-7-560	711.2	28	60	20	12	1/2	100	230	330	1200	3000	406.9	827.2	10680	10680	10680	10680	10680	8330	6190	M24–M56
FPR-700-8-560	711.2	28	68	25	32	1 1/4	115	270	390	1300	3000	494.0	1011.5	14800	14800	14800	14800	14800	11540	8580	M36–M64
FPR-700-9-560	711.2	28	76	25	11	7/16	130	294	410	1300	3000	570.7	1175.9	19300	19300	19300	19300	19300	15050	11190	M36–M72
FPR-700-10-560	711.2	28	86	30	26	1	140	340	460	1300	3000	680.9	1472.9	26700	26700	26700	26700	26700	20830	15490	M36–M80
FPR-700-11-560	711.2	28	86	35	-10	-3/8	140	360	470	1300	3000	864.3	1827.6	36000	36000	36000	36000	36000	28080	20880	M36–M80
FPR-700-12-560	711.2	28	86	40	-10	-3/8	140	380	540	1400	3000	1022.0	2109.9	46050	46050	46050	46050	46050	35920	26710	M36–M80
FPR-700-13-560	711.2	28	86	40	-46	-1 13/16	140	430	590	1400	3000	1162.5	2335.4	56250	56250	56250	56250	56250	43880	32630	M36–M80
FPR-700-3-600	711.2	28	26	10	-48	-1 7/8	45	168	250	1100	3000	190.9	401.6	2020	2020	2020	2020	2020	2020	2020	M8–M24
FPR-700-4-600	711.2	28	33	10	-38	-1 1/2	55	200	270	1100	3000	236.4	502.5	3160	3160	3160	3160	3160	3160	3160	M8–M30
FPR-700-5-600	711.2	28	39	12	-28	-1 1/8	65	210	290	1100	3000	293.9	616.8	4560	4560	4560	4560	4560	4560	4560	M12–M36
FPR-700-6-600	711.2	28	52	15	-3	-1/8	85	240	340	1200	3000	396.4	824.8	7300	7300	7300	7300	7300	7300	7300	M20–M48
FPR-700-7-600	711.2	28	60	20	12	1/2	100	280	380	1200	3000	462.5	1066.0	10680	10680	10680	10680	10680	10680	10680	M24–M56
FPR-700-8-600	711.2	28	68	25	32	1 1/4	115	320	440	1300	3000	637.4	1246.2	14800	14800	14800	14800	14800	14800	14800	M36–M64
FPR-700-9-600	711.2	28	76	25	11	7/16	130	350	470	1300	3000	672.7	1478.0	19300	19300	19300	19300	19300	19300	19300	M36–M72
FPR-700-10-600	711.2	28	86	30	26	1	140	380	480	1300	3000	830.1	1782.2	26700	26700	26700	26700	26700	26700	26700	M36–M80
FPR-700-11-600	711.2	28	86	35	-10	-3/8	140	420	550	1400	3000	1081.5	2094.1	36000	36000	36000	36000	36000	36000	36000	M36–M80
FPR-700-12-600	711.2	28	86	40	-10	-3/8	140	440	560	1400	3000	1251.7	2504.3	46050	46050	46050	46050	46050	46050	46050	M36–M80
FPR-700-13-600	711.2	28	86	40	-46	-1 13/16	140	490	550	1400	3000	1399.2	2827.2	56250	56250	56250	56250	56250	56250	56250	M36–M80

FPR RISER CLAMP FLAT PLATE TYPE

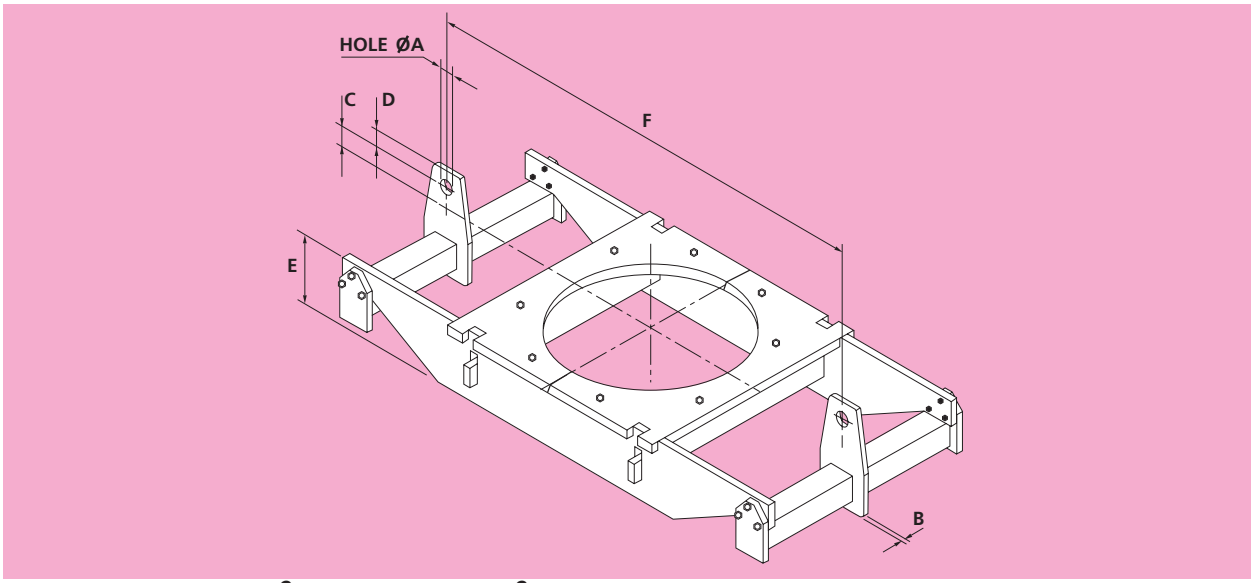

Material: Carbon Steel to 400°C Alloy Steel above 400°C End Beams and Lugs: Carbon Steel. Order by Part No. and Rod Centres "F"

Part Number	Pipe O/D		A	B	C		D	E		F		Weight kg		Load Capacity (kg) at Temperature C							Compatible with Rod Sizes
	mm	in	mm	mm	mm	in	mm	Min.	Max.	Min.	Max.	Min.	Max.	350	400	490	530	560	580	600	
FPR-750-4-400	762	30	33	10	-38	-1 1/2	55	188	200	1200	3000	170.9	353.0	3160	3160						M8–M30
FPR-750-5-400	762	30	39	12	-28	-1 1/8	65	208	230	1200	3000	236.6	403.1	4560	4560						M12–M36
FPR-750-6-400	762	30	52	15	-3	-1/8	85	208	280	1200	3000	279.3	581.7	7300	7300						M20–M48
FPR-750-7-400	762	30	60	20	12	1/2	100	228	310	1300	3000	371.6	736.1	10680	10680						M24–M56
FPR-750-8-400	762	30	68	25	32	1 1/4	115	258	340	1300	3000	473.6	934.0	14800	14800						M36–M64
FPR-750-9-400	762	30	76	25	11	7/16	130	294	390	1300	3000	537.8	1060.5	19300	19300						M36–M72
FPR-750-10-400	762	30	86	30	26	1	140	294	430	1400	3000	659.0	1313.8	26700	26700						M36–M80
FPR-750-11-400	762	30	86	35	-10	-3/8	140	360	480	1400	3000	788.6	1631.7	36000	36000						M36–M80
FPR-750-12-400	762	30	86	40	-10	-3/8	140	380	500	1400	3000	976.4	2064.5	46050	46050						M36–M80
FPR-750-13-400	762	30	86	40	-46	-1 13/16	140	416	540	1400	3000	1042.1	2216.1	56250	56250						M36–M80
FPR-750-4-490	762	30	33	10	-38	-1 1/2	55	188	200	1200	3000	170.9	353.0	3160	3160	3160	2050	1230	880	760	M8–M30
FPR-750-5-490	762	30	39	12	-28	-1 1/8	65	208	230	1200	3000	208.9	403.1	4560	4560	4560	2960	1780	1280	1090	M12–M36
FPR-750-6-490	762	30	52	15	-3	-1/8	85	208	270	1200	3000	279.3	543.6	7300	7300	7300	4750	2850	2040	1750	M20–M48
FPR-750-7-490	762	30	60	20	12	1/2	100	228	300	1300	3000	371.6	696.4	10680	10680	10680	6940	4170	2990	2560	M24–M56
FPR-750-8-490	762	30	68	25	32	1 1/4	115	258	340	1300	3000	473.6	934.0	14800	14800	14800	9620	5770	4140	3550	M36–M64
FPR-750-9-490	762	30	76	25	11	7/16	130	294	380	1300	3000	537.8	1043.0	19300	19300	19300	12550	7530	5400	4630	M36–M72
FPR-750-10-490	762	30	86	30	26	1	140	294	420	1400	3000	659.0	1294.1	26700	26700	26700	17360	10410	7480	6410	M36–M80
FPR-750-11-490	762	30	86	35	-10	-3/8	140	360	470	1400	3000	788.6	1608.5	36000	36000	36000	23400	14040	10080	8640	M36–M80
FPR-750-12-490	762	30	86	40	-10	-3/8	140	380	490	1400	3000	976.4	2036.3	46050	46050	46050	29930	17960	12890	11050	M36–M80
FPR-750-13-490	762	30	86	40	-46	-1 13/16	140	416	540	1400	3000	1042.1	2216.1	56250	56250	56250	36560	21940	15750	13500	M36–M80
FPR-750-4-530	762	30	33	10	-38	-1 1/2	55	188	210	1200	3000	188.8	363.6	3160	3160	3160	3160	1900	1390	1140	M8–M30
FPR-750-5-530	762	30	39	12	-28	-1 1/8	65	208	230	1200	3000	240.9	489.2	4560	4560	4560	4560	2740	2010	1640	M12–M36
FPR-750-6-530	762	30	52	15	-3	-1/8	85	208	290	1200	3000	307.9	594.6	7300	7300	7300	7300	4380	3210	2630	M20–M48
FPR-750-7-530	762	30	60	20	12	1/2	100	230	330	1300	3000	377.4	767.1	10680	10680	10680	10680	6410	4700	3840	M24–M56
FPR-750-8-530	762	30	68	25	32	1 1/4	115	258	350	1300	3000	488.2	951.5	14800	14800	14800	14800	8880	6510	5330	M36–M64
FPR-750-9-530	762	30	76	25	11	7/16	130	294	400	1300	3000	545.4	1078.8	19300	19300	19300	19300	11580	8490	6950	M36–M72
FPR-750-10-530	762	30	86	30	26	1	140	320	440	1400	3000	735.5	1334.5	26700	26700	26700	26700	16020	11750	9610	M36–M80
FPR-750-11-530	762	30	86	35	-10	-3/8	140	360	490	1400	3000	851.4	1653.8	36000	36000	36000	36000	21600	15840	12960	M36–M80
FPR-750-12-530	762	30	86	40	-10	-3/8	140	380	510	1400	3000	987.4	2091.3	46050	46050	46050	46050	27630	20260	16580	M36–M80
FPR-750-13-530	762	30	86	40	-46	-1 13/16	140	416	550	1400	3000	1191.8	2443.0	56250	56250	56250	56250	33750	24750	20250	M36–M80
FPR-750-4-560	762	30	33	10	-38	-1 1/2	55	188	240	1200	3000	220.6	420.3	3160	3160	3160	3160	3160	2460	1830	M8–M30
FPR-750-5-560	762	30	39	12	-28	-1 1/8	65	208	260	1200	3000	277.6	529.0	4560	4560	4560	4560	4560	3560	2640	M12–M36
FPR-750-6-560	762	30	52	15	-3	-1/8	85	220	290	1200	3000	348.9	661.8	7300	7300	7300	7300	7300	5690	4230	M20–M48
FPR-750-7-560	762	30	60	20	12	1/2	100	240	330	1300	3000	451.9	856.6	10680	10680	10680	10680	10680	8330	6190	M24–M56
FPR-750-8-560	762	30	68	25	32	1 1/4	115	280	390	1300	3000	535.1	1048.4	14800	14800	14800	14800	14800	11540	8580	M36–M64
FPR-750-9-560	762	30	76	25	11	7/16	130	294	410	1300	3000	616.2	1242.0	19300	19300	19300	19300	19300	15050	11190	M36–M72
FPR-750-10-560	762	30	86	30	26	1	140	340	450	1400	3000	753.6	1515.1	26700	26700	26700	26700	26700	20830	15490	M36–M80
FPR-750-11-560	762	30	86	35	-10	-3/8	140	370	470	1400	3000	944.2	1883.6	36000	36000	36000	36000	36000	28080	20880	M36–M80
FPR-750-12-560	762	30	86	40	-10	-3/8	140	380	530	1400	3000	1078.4	2146.4	46050	46050	46050	46050	46050	35920	26710	M36–M80
FPR-750-13-560	762	30	86	40	-46	-1 13/16	140	430	590	1400	3000	1227.2	2408.9	56250	56250	56250	56250	56250	43880	32630	M36–M80
FPR-750-4-600	762	30	33	10	38	-1 1/2	55	188	270	1200	3000	283.3	522.4	3160	3160	3160	3160	3160	3160	3160	M8–M30
FPR-750-5-600	762	30	39	12	-28	-1 1/8	65	220	290	1200	3000	347.1	660.1	4560	4560	4560	4560	4560	4560	4560	M12–M36
FPR-750-6-600	762	30	52	15	-3	-1/8	85	240	340	1200	3000	425.4	879.3	7300	7300	7300	7300	7300	7300	7300	M20–M48
FPR-750-7-600	762	30	60	20	12	1/2	100	300	400	1300	3000	544.4	1032.1	10680	10680	10680	10680	10680	10680	10680	M24–M56
FPR-750-8-600	762	30	68	25	32	1 1/4	115	320	440	1300	3000	681.2	1289.4	14800	14800	14800	14800	14800	14800	14800	M36–M64
FPR-750-9-600	762	30	76	25	11	7/16	130	330	460	1400	3000	780.2	1506.4	19300	19300	19300	19300	19300	19300	19300	M36–M72
FPR-750-10-600	762	30	86	30	26	1	140	390	470	1400	3000	924.2	1824.4	26700	26700	26700	26700	26700	26700	26700	M36–M80
FPR-750-11-600	762	30	86	35	-10	-3/8	140	420	540	1400	3000	1144.3	2131.8	36000	36000	36000	36000	36000	36000	36000	M36–M80
FPR-750-12-600	762	30	86	40	-10	-3/8	140	450	550	1500	3000	1361.1	2545.7	46050	46050	46050	46050	46050	46050	46050	M36–M80
FPR-750-13-600	762	30	86	40	-46	-1 13/16	140	500	540	1500	3000	1521.1	2869.3	56250	56250	56250	56250	56250	56250	56250	M36–M80

FPR RISER CLAMP FLAT PLATE TYPE

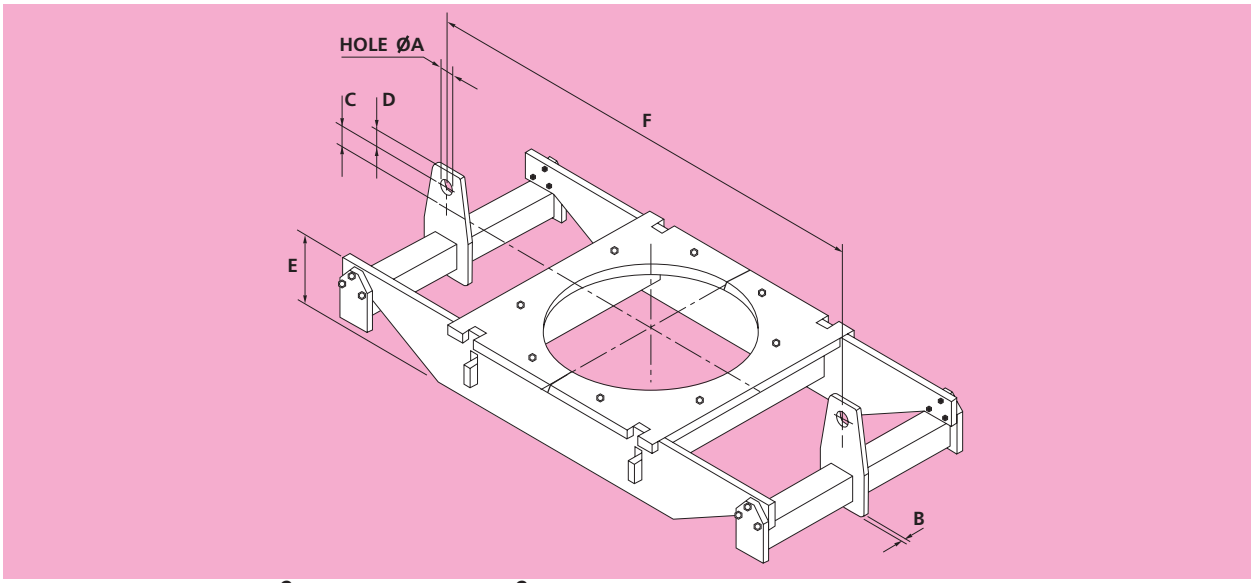

Material: Carbon Steel to 400°C Alloy Steel above 400°C End Beams and Lugs: Carbon Steel. Order by Part No. and Rod Centres "F"

Part Number	Pipe O/D		A	B	C		D	E		F		Weight kg		Load Capacity (kg) at Temperature C							Compatible with Rod Sizes
	mm	in	mm	mm	mm	in	mm	Min.	Max.	Min.	Max.	Min.	Max.	350	400	490	530	560	580	600	
FPR-800-4-400	812.8	32	33	10	-38	-1 1/2	55	188	200	1200	3000	198.8	369.0	3160	3160						M8–M30
FPR-800-5-400	812.8	32	39	12	-28	-1 1/8	65	208	240	1300	3000	259.1	458.4	4560	4560						M12–M36
FPR-800-6-400	812.8	32	52	15	-3	-1/8	85	208	270	1300	3000	330.6	592.9	7300	7300						M20–M48
FPR-800-7-400	812.8	32	60	20	12	1/2	100	228	310	1300	3000	398.3	765.6	10680	10680						M24–M56
FPR-800-8-400	812.8	32	68	25	32	1 1/4	115	258	340	1400	3000	521.3	969.0	14800	14800						M36–M64
FPR-800-9-400	812.8	32	76	25	11	7/16	130	294	380	1400	3000	590.6	1081.9	19300	19300						M36–M72
FPR-800-10-400	812.8	32	86	30	26	1	140	300	420	1400	3000	709.4	1340.4	26700	26700						M36–M80
FPR-800-11-400	812.8	32	86	35	-10	-3/8	140	360	470	1400	3000	845.4	1663.4	36000	36000						M36–M80
FPR-800-12-400	812.8	32	86	40	-10	-3/8	140	380	490	1500	3000	1082.7	2122.8	46050	46050						M36–M80
FPR-800-13-400	812.8	32	86	40	-46	-1 13/16	140	466	540	1600	3000	1378.4	2368.1	56250	56250						M36–M80
FPR-800-4-490	812.8	32	33	10	-38	-1 1/2	55	188	200	1200	3000	198.8	369.0	3160	3160	3160	2050	1230	880	760	M8–M30
FPR-800-5-490	812.8	32	39	12	-28	-1 1/8	65	208	240	1300	3000	259.1	458.4	4560	4560	4560	2960	1780	1280	1090	M12–M36
FPR-800-6-490	812.8	32	52	15	-3	-1/8	85	208	270	1300	3000	330.6	592.9	7300	7300	7300	4750	2850	2040	1750	M20–M48
FPR-800-7-490	812.8	32	60	20	12	1/2	100	228	300	1300	3000	398.3	750.4	10680	10680	10680	6940	4170	2990	2560	M24–M56
FPR-800-8-490	812.8	32	68	25	32	1 1/4	115	258	350	1400	3000	521.3	887.8	14800	14800	14800	9620	5770	4140	3550	M36–M64
FPR-800-9-490	812.8	32	76	25	11	7/16	130	294	380	1400	3000	582.5	1081.9	19300	19300	19300	12550	7530	5400	4630	M36–M72
FPR-800-10-490	812.8	32	86	30	26	1	140	300	420	1400	3000	709.4	1340.4	26700	26700	26700	17360	10410	7480	6410	M36–M80
FPR-800-11-490	812.8	32	86	35	-10	-3/8	140	360	460	1400	3000	845.4	1641.1	36000	36000	36000	23400	14040	10080	8640	M36–M80
FPR-800-12-490	812.8	32	86	40	-10	-3/8	140	380	490	1500	3000	1082.7	2122.8	46050	46050	46050	29930	17960	12890	11050	M36–M80
FPR-800-13-490	812.8	32	86	40	-46	-1 13/16	140	466	530	1600	3000	1291.5	2339.3	56250	56250	56250	36560	21940	15750	13500	M36–M80
FPR-800-4-530	812.8	32	33	10	-38	-1 1/2	55	188	210	1200	3000	203.6	379.7	3160	3160	3160	3160	1900	1390	1140	M8–M30
FPR-800-5-530	812.8	32	39	12	-28	-1 1/8	65	208	250	1300	3000	268.7	469.2	4560	4560	4560	4560	2740	2010	1640	M12–M36
FPR-800-6-530	812.8	32	52	15	-3	-1/8	85	208	290	1300	3000	342.6	619.5	7300	7300	7300	7300	4380	3210	2630	M20–M48
FPR-800-7-530	812.8	32	60	20	12	1/2	100	240	320	1300	3000	410.5	781.6	10680	10680	10680	10680	6410	4700	3840	M24–M56
FPR-800-8-530	812.8	32	68	25	32	1 1/4	115	258	350	1400	3000	528.8	986.7	14800	14800	14800	14800	8880	6510	5330	M36–M64
FPR-800-9-530	812.8	32	76	25	11	7/16	130	294	400	1400	3000	598.1	1118.1	19300	19300	19300	19300	11580	8490	6950	M36–M72
FPR-800-10-530	812.8	32	86	30	26	1	140	330	450	1400	3000	792.0	1461.0	26700	26700	26700	26700	16020	11750	9610	M36–M80
FPR-800-11-530	812.8	32	86	35	-10	-3/8	140	360	480	1500	3000	927.8	1686.8	36000	36000	36000	36000	21600	15840	12960	M36–M80
FPR-800-12-530	812.8	32	86	40	-10	-3/8	140	390	500	1500	3000	1093.5	2151.3	46050	46050	46050	46050	27630	20260	16580	M36–M80
FPR-800-13-530	812.8	32	86	40	-46	-1 13/16	140	466	550	1600	3000	1392.4	2458.0	56250	56250	56250	56250	33750	24750	20250	M36–M80
FPR-800-4-560	812.8	32	33	10	-38	-1 1/2	55	188	240	1200	3000	243.0	439.9	3160	3160	3160	3160	3160	2460	1830	M8–M30
FPR-800-5-560	812.8	32	39	12	-28	-1 1/8	65	208	250	1300	3000	304.4	536.8	4560	4560	4560	4560	4560	3560	2640	M12–M36
FPR-800-6-560	812.8	32	52	15	-3	-1/8	85	220	290	1300	3000	381.6	687.5	7300	7300	7300	7300	7300	5690	4230	M20–M48
FPR-800-7-560	812.8	32	60	20	12	1/2	100	240	350	1300	3000	482.9	855.9	10680	10680	10680	10680	10680	8330	6190	M24–M56
FPR-800-8-560	812.8	32	68	25	32	1 1/4	115	280	380	1400	3000	580.3	1069.9	14800	14800	14800	14800	14800	11540	8580	M36–M64
FPR-800-9-560	812.8	32	76	25	11	7/16	130	300	400	1400	3000	677.0	1266.6	19300	19300	19300	19300	19300	15050	11190	M36–M72
FPR-800-10-560	812.8	32	86	30	26	1	140	350	450	1400	3000	810.3	1569.7	26700	26700	26700	26700	26700	20830	15490	M36–M80
FPR-800-11-560	812.8	32	86	35	-10	-3/8	140	380	460	1500	3000	1029.5	1914.2	36000	36000	36000	36000	36000	28080	20880	M36–M80
FPR-800-12-560	812.8	32	86	40	-10	-3/8	140	400	520	1500	3000	1263.5	2206.8	46050	46050	46050	46050	46050	35920	26710	M36–M80
FPR-800-13-560	812.8	32	86	40	-46	-1 13/16	140	466	580	1600	3000	1419.3	2543.1	56250	56250	56250	56250	56250	43880	32630	M36–M80
FPR-800-4-600	812.8	32	33	10	-38	-1 1/2	55	188	260	1300	3000	310.7	530.3	3160	3160	3160	3160	3160	3160	3160	M8–M30
FPR-800-5-600	812.8	32	39	12	-28	-1 1/8	65	220	290	1300	3000	379.9	685.7	4560	4560	4560	4560	4560	4560	4560	M12–M36
FPR-800-6-600	812.8	32	52	15	-3	-1/8	85	250	330	1300	3000	471.5	895.1	7300	7300	7300	7300	7300	7300	7300	M20–M48
FPR-800-7-600	812.8	32	60	20	12	1/2	100	270	400	1300	3000	569.1	1070.7	10680	10680	10680	10680	10680	10680	10680	M24–M56
FPR-800-8-600	812.8	32	68	25	32	1 1/4	115	330	430	1400	3000	749.3	1313.5	14800	14800	14800	14800	14800	14800	14800	M36–M64
FPR-800-9-600	812.8	32	76	25	11	7/16	130	340	460	1400	3000	838.8	1559.6	9300	19300	19300	19300	19300	19300	19300	M36–M72
FPR-800-10-600	812.8	32	86	30	26	1	140	400	460	1400	3000	991.9	1855.3	26700	26700	26700	26700	26700	26700	26700	M36–M80
FPR-800-11-600	812.8	32	86	35	-10	-3/8	140	430	540	1500	3000	1244.6	2197.8	36000	36000	36000	36000	36000	36000	36000	M36–M80
FPR-800-12-600	812.8	32	86	40	-10	-3/8	140	450	540	1500	3000	1456.7	2612.8	46050	46050	46050	46050	46050	46050	46050	M36–M80
FPR-800-13-600	812.8	32	86	40	-46	-1 13/16	140	466	600	1600	3000	1776.0	2990.4	56250	56250	56250	56250	56250	56250	56250	M36–M80

FPR RISER CLAMP FLAT PLATE TYPE

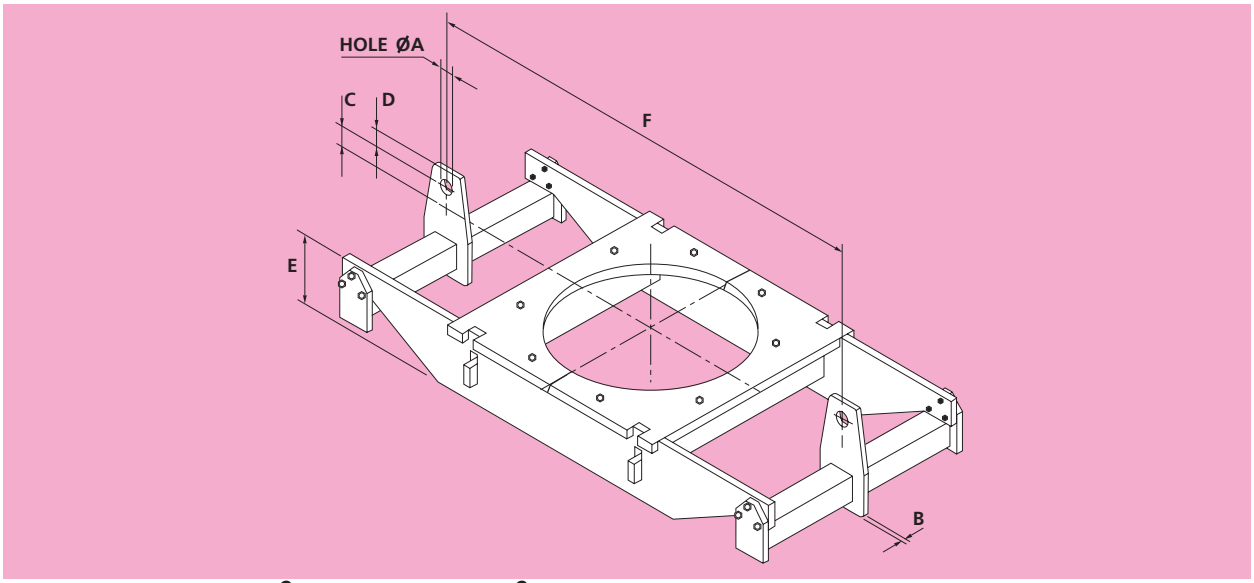

Material: Carbon Steel to 400°C Alloy Steel above 400°C End Beams and Lugs: Carbon Steel. Order by Part No. and Rod Centres "F"

Part Number	Pipe O/D		A	B	C		D	E		F		Weight kg		Load Capacity (kg) at Temperature C							Compatible with Rod Sizes
	mm	in	mm	mm	mm	in	mm	Min.	Max.	Min.	Max.	Min.	Max.	350	400	490	530	560	580	600	
FPR-850-4-400	863.6	34	33	10	-38	-1 1/2	55	188	200	1300	3000	221.6	385.0	3160	3160						M8–M30
FPR-850-5-400	863.6	34	39	12	-28	-1 1/8	65	208	240	1300	3000	282.4	478.5	4560	4560						M12–M36
FPR-850-6-400	863.6	34	52	15	-3	-1/8	85	208	270	1300	3000	359.1	617.4	7300	7300						M20–M48
FPR-850-7-400	863.6	34	60	20	12	1/2	100	230	300	1400	3000	437.6	780.0	10680	10680						M24–M56
FPR-850-8-400	863.6	34	68	25	32	1 1/4	115	258	350	1400	3000	552.8	921.9	14800	14800						M36–M64
FPR-850-9-400	863.6	34	76	25	11	7/16	130	294	380	1500	3000	648.9	1134.6	19300	19300						M36–M72
FPR-850-10-400	863.6	34	86	30	26	1	140	300	420	1500	3000	763.2	1386.8	26700	26700						M36–M80
FPR-850-11-400	863.6	34	86	35	-10	-3/8	140	380	470	1500	3000	1005.7	1751.1	36000	36000						M36–M80
FPR-850-12-400	863.6	34	86	40	-10	-3/8	140	390	490	1500	3000	1152.3	2190.0	46050	46050						M36–M80
FPR-850-13-400	863.6	34	86	40	-46	-1 13/16	140	466	540	1600	3000	1446.3	2506.1	56250	56250						M36–M80
FPR-850-4-490	863.6	34	33	10	-38	-1 1/2	55	188	190	1300	3000	221.6	373.6	3160	3160	3160	2050	1230	880	760	M8–M30
FPR-850-5-490	863.6	34	39	12	-28	-1 1/8	65	208	230	1300	3000	282.4	467.1	4560	4560	4560	2960	1780	1280	1090	M12–M36
FPR-850-6-490	863.6	34	52	15	-3	-1/8	85	208	270	1300	3000	359.1	617.4	7300	7300	7300	4750	2850	2040	1750	M20–M48
FPR-850-7-490	863.6	34	60	20	12	1/2	100	230	300	1400	3000	437.6	780.0	10680	10680	10680	6940	4170	2990	2560	M24–M56
FPR-850-8-490	863.6	34	68	25	32	1 1/4	115	258	350	1400	3000	552.8	921.9	14800	14800	14800	9620	5770	4140	3550	M36–M64
FPR-850-9-490	863.6	34	76	25	11	7/16	130	294	380	1500	3000	648.9	1134.6	19300	19300	19300	12550	7530	5400	4630	M36–M72
FPR-850-10-490	863.6	34	86	30	26	1	140	300	420	1500	3000	763.2	1386.8	26700	26700	26700	17360	10410	7480	6410	M36–M80
FPR-850-11-490	863.6	34	86	35	-10	-3/8	140	380	460	1500	3000	993.8	1728.5	36000	36000	36000	23400	14040	10080	8640	M36–M80
FPR-850-12-490	863.6	34	86	40	-10	-3/8	140	380	480	1500	3000	1141.4	2162.8	46050	46050	46050	29930	17960	12890	11050	M36–M80
FPR-850-13-490	863.6	34	86	40	-46	-1 13/16	140	466	530	1600	3000	1352.4	2047.7	56250	56250	56250	56250	21940	15750	13500	M36–M80
FPR-850-4-530	863.6	34	33	10	-38	-1 1/2	55	188	210	1300	3000	226.2	395.8	3160	3160	3160	3160	1900	1390	1140	M8–M30
FPR-850-5-530	863.6	34	39	12	-28	-1 1/8	65	208	250	1300	3000	287.5	489.4	4560	4560	4560	4560	2740	2010	1640	M12–M36
FPR-850-6-530	863.6	34	52	15	-3	-1/8	85	208	290	1300	3000	365.5	644.2	7300	7300	7300	7300	4380	3210	2630	M20–M48
FPR-850-7-530	863.6	34	60	20	12	1/2	100	240	320	1400	3000	444.3	811.5	10680	10680	10680	10680	6410	4700	3840	M24–M56
FPR-850-8-530	863.6	34	68	25	32	1 1/4	115	260	350	1400	3000	568.7	1022.0	14800	14800	14800	14800	8880	6510	5330	M36–M64
FPR-850-9-530	863.6	34	76	25	11	7/16	130	300	400	1500	3000	665.5	1171.1	19300	19300	19300	19300	11580	8490	6950	M36–M72
FPR-850-10-530	863.6	34	86	30	26	1	140	340	440	1500	3000	864.0	1494.5	26700	26700	26700	26700	16020	11750	9610	M36–M80
FPR-850-11-530	863.6	34	86	35	-10	-3/8	140	380	480	1500	3000	1016.6	1774.9	36000	36000	36000	36000	21600	15840	12960	M36–M80
FPR-850-12-530	863.6	34	86	40	-10	-3/8	140	400	500	1500	3000	1164.2	2218.8	46050	46050	46050	46050	27630	20260	16580	M36–M80
FPR-850-13-530	863.6	34	86	40	-46	-1 13/16	140	466	550	1600	3000	1460.5	2533.7	56250	56250	56250	56250	33750	24750	20250	M36–M80
FPR-850-4-560	863.6	34	33	10	-38	-1 1/2	55	188	240	1300	3000	265.1	459.4	3160	3160	3160	3160	3160	2460	1830	M8–M30
FPR-850-5-560	863.6	34	39	12	-28	-1 1/8	65	208	250	1300	3000	321.4	557.9	4560	4560	4560	4560	4560	3560	2640	M12–M36
FPR-850-6-560	863.6	34	52	15	-3	-1/8	85	230	290	1300	3000	413.7	713.3	7300	7300	7300	7300	7300	5690	4230	M20–M48
FPR-850-7-560	863.6	34	60	20	12	1/2	100	250	350	1400	3000	529.7	889.4	10680	10680	10680	10680	10680	8330	6190	M24–M56
FPR-850-8-560	863.6	34	68	25	32	1 1/4	115	290	380	1400	3000	623.1	1109.1	14800	14800	14800	14800	14800	11540	8580	M36–M64
FPR-850-9-560	863.6	34	76	25	11	7/16	130	300	400	1500	3000	742.6	1324.7	19300	19300	19300	19300	19300	15050	11190	M36–M72
FPR-850-10-560	863.6	34	86	30	26	1	140	330	450	1500	3000	925.8	1624.4	26700	26700	26700	26700	26700	20830	15490	M36–M80
FPR-850-11-560	863.6	34	86	35	-10	-3/8	140	390	470	1500	3000	1125.9	2106.7	36000	36000	36000	36000	36000	28080	20880	M36–M80
FPR-850-12-560	863.6	34	86	40	-10	-3/8	140	410	520	1600	3000	1365.3	2274.9	46050	46050	46050	46050	46050	35920	26710	M36–M80
FPR-850-13-560	863.6	34	86	40	-46	-1 13/16	140	466	570	1600	3000	1501.0	2590.5	56250	56250	56250	56250	56250	43880	32630	M36–M80
FPR-850-4-600	863.6	34	33	10	-38	-1 1/2	55	190	270	1300	3000	338.4	594.8	3160	3160	3160	3160	3160	3160	3160	M8–M30
FPR-850-5-600	863.6	34	39	12	-28	-1 1/8	65	230	280	1300	3000	411.9	696.3	4560	4560	4560	4560	4560	4560	4560	M12–M36
FPR-850-6-600	863.6	34	52	15	-3	-1/8	85	260	330	1400	3000	519.0	929.1	7300	7300	7300	7300	7300	7300	7300	M20–M48
FPR-850-7-600	863.6	34	60	20	12	1/2	100	280	400	1400	3000	625.4	1109.6	10680	10680	10680	10680	10680	10680	10680	M24–M56
FPR-850-8-600	863.6	34	68	25	32	1 1/4	115	340	430	1500	3000	819.7	1358.5	14800	14800	14800	14800	14800	14800	14800	M36–M64
FPR-850-9-600	863.6	34	76	25	11	7/16	130	350	450	1500	3000	927.4	1603.3	19300	19300	19300	19300	19300	19300	19300	M36–M72
FPR-850-10-600	863.6	34	86	30	26	1	140	380	470	1500	3000	1135.3	2009.7	26700	26700	26700	26700	26700	26700	26700	M36–M80
FPR-850-11-600	863.6	34	86	35	-10	-3/8	140	440	540	1600	3000	1379.5	2372.9	36000	36000	36000	36000	36000	36000	36000	M36–M80
FPR-850-12-600	863.6	34	86	40	-10	-3/8	140	460	600	1600	3000	1575.1	2568.4	46050	46050	46050	46050	46050	46050	46050	M36–M80
FPR-850-13-600	863.6	34	86	40	-46	-1 13/16	140	466	600	1700	3000	1925.4	3076.1	56250	56250	56250	56250	56250	56250	56250	M36–M80

FPR RISER CLAMP FLAT PLATE TYPE

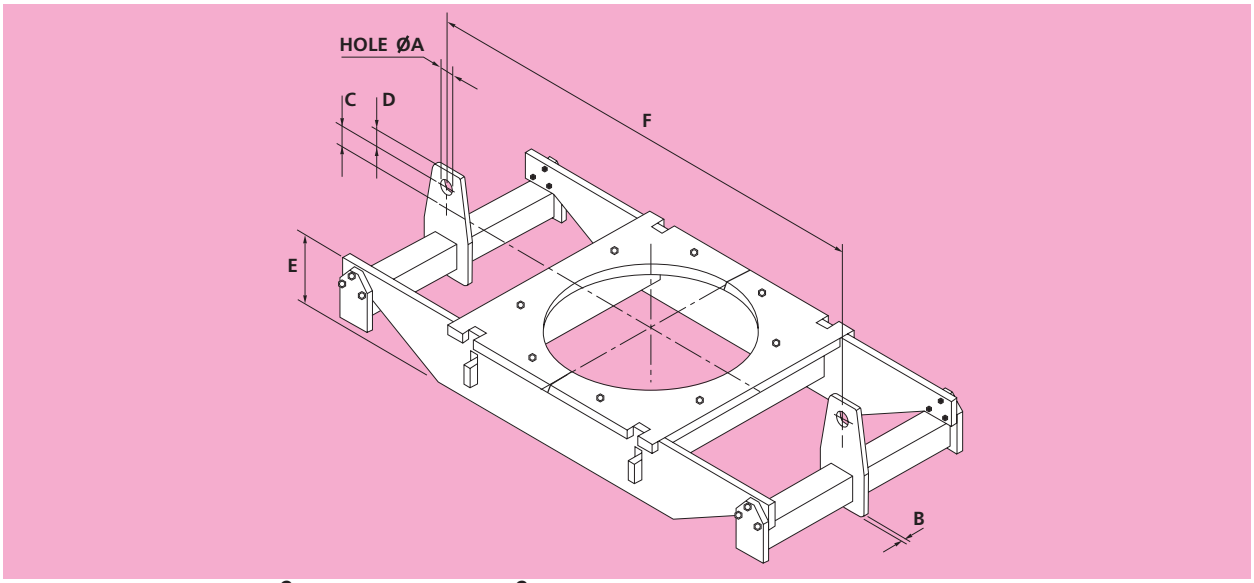

Material: Carbon Steel to 400°C Alloy Steel above 400°C End Beams and Lugs: Carbon Steel. Order by Part No. and Rod Centres "F"

Part Number	Pipe O/D		A	B	C		D	E		F		Weight kg		Load Capacity (kg) at Temperature C							Compatible with Rod Sizes
	mm	in	mm	mm	mm	in	mm	Min.	Max.	Min.	Max.	Min.	Max.	350	400	490	530	560	580	600	
FPR-900-4-400	914.4	36	33	10	-38	-1 1/2	55	188	190	1400	3000	241.2	391.0	3160	3160						M8–M30
FPR-900-5-400	914.4	36	39	12	-28	-1 1/8	65	208	230	1400	3000	307.1	489.1	4560	4560						M12–M36
FPR-900-6-400	914.4	36	52	15	-3	-1/8	85	208	270	1400	3000	389.7	644.3	7300	7300						M20–M48
FPR-900-7-400	914.4	36	60	20	12	1/2	100	240	300	1400	3000	473.8	811.5	10680	10680						M24–M56
FPR-900-8-400	914.4	36	68	25	32	1 1/4	115	258	350	1500	3000	603.9	958.3	14800	14800						M36–M64
FPR-900-9-400	914.4	36	76	25	11	7/16	130	294	380	1500	3000	696.4	1177.6	19300	19300						M36–M72
FPR-900-10-400	914.4	36	86	30	26	1	140	324	420	1600	3000	849.3	1463.7	26700	26700						M36–M80
FPR-900-11-400	914.4	36	86	35	-10	-3/8	140	380	460	1600	3000	1076.1	1787.4	36000	36000						M36–M80
FPR-900-12-400	914.4	36	86	40	-10	-3/8	140	400	480	1600	3000	1246.8	2234.0	46050	46050						M36–M80
FPR-900-13-400	914.4	36	86	40	-46	-1 13/16	140	466	540	1700	3000	1555.5	2586.0	56250	56250						M36–M80
FPR-900-4-490	914.4	36	33	10	-38	-1 1/2	55	188	190	1400	3000	241.2	391.0	3160	3160	3160	2050	1230	880	760	M8–M30
FPR-900-5-490	914.4	36	39	12	-28	-1 1/8	65	208	230	1400	3000	307.1	489.1	4560	4560	4560	2960	1780	1280	1090	M12–M36
FPR-900-6-490	914.4	36	52	15	-3	-1/8	85	208	270	1400	3000	389.7	644.3	7300	7300	7300	4750	2850	2040	1750	M20–M48
FPR-900-7-490	914.4	36	60	20	12	1/2	100	230	300	1400	3000	466.9	811.5	10680	10680	10680	6940	4170	2990	2560	M24–M56
FPR-900-8-490	914.4	36	68	25	32	1 1/4	115	258	350	1500	3000	603.9	958.3	14800	14800	14800	9620	5770	4140	3550	M36–M64
FPR-900-9-490	914.4	36	76	25	11	7/16	130	294	370	1500	3000	696.4	1158.7	19300	19300	19300	12550	7530	5400	4630	M36–M72
FPR-900-10-490	914.4	36	86	30	26	1	140	324	410	1600	3000	849.3	1442.2	26700	26700	26700	17360	10410	7480	6410	M36–M80
FPR-900-11-490	914.4	36	86	35	-10	-3/8	140	380	460	1600	3000	1076.1	1787.4	36000	36000	36000	23400	14040	10080	8640	M36–M80
FPR-900-12-490	914.4	36	86	40	-10	-3/8	140	390	480	1600	3000	1234.3	2234.0	46050	46050	46050	29930	17960	12890	11050	M36–M80
FPR-900-13-490	914.4	36	86	40	-46	-1 13/16	140	466	530	1700	3000	1555.5	2556.9	56250	56250	56250	36560	21940	15750	13500	M36–M80
FPR-900-4-530	914.4	36	33	10	-38	-1 1/2	55	188	210	1400	3000	246.1	413.4	3160	3160	3160	3160	1900	1390	1140	M8–M30
FPR-900-5-530	914.4	36	39	12	-28	-1 1/8	65	208	250	1400	3000	312.5	511.6	4560	4560	4560	4560	2740	2010	1640	M12–M36
FPR-900-6-530	914.4	36	52	15	-3	-1/8	85	208	280	1400	3000	396.6	658.2	7300	7300	7300	7300	4380	3210	2630	M20–M48
FPR-900-7-530	914.4	36	60	20	12	1/2	100	250	310	1400	3000	480.1	827.0	10680	10680	10680	10680	6410	4700	3840	M24–M56
FPR-900-8-530	914.4	36	68	25	32	1 1/4	115	270	340	1500	3000	620.8	1042.3	14800	14800	14800	14800	8880	6510	5330	M36–M64
FPR-900-9-530	914.4	36	76	25	11	7/16	130	294	390	1500	3000	731.8	1195.5	19300	19300	19300	19300	11580	8490	6950	M36–M72
FPR-900-10-530	914.4	36	86	30	26	1	140	340	440	1600	3000	949.8	1579.3	26700	26700	26700	26700	16020	11750	9610	M36–M80
FPR-900-11-530	914.4	36	86	35	-10	-3/8	140	380	470	1600	3000	1100.2	1810.2	36000	36000	36000	36000	21600	15840	12960	M36–M80
FPR-900-12-530	914.4	36	86	40	-10	-3/8	140	380	490	1600	3000	1323.6	2261.5	46050	46050	46050	46050	27630	20260	16580	M36–M80
FPR-900-13-530	914.4	36	86	40	-46	-1 13/16	140	466	540	1700	3000	1569.3	2586.4	56250	56250	56250	56250	33750	24750	20250	M36–M80
FPR-900-4-560	914.4	36	33	10	-38	-1 1/2	55	188	230	1400	3000	294.4	469.3	3160	3160	3160	3160	3160	2460	1830	M8–M30
FPR-900-5-560	914.4	36	39	12	-28	-1 1/8	65	208	250	1400	3000	381.7	581.0	4560	4560	4560	4560	4560	3560	2640	M12–M36
FPR-900-6-560	914.4	36	52	15	-3	-1/8	85	240	290	1400	3000	456.2	775.3	7300	7300	7300	7300	7300	5690	4230	M20–M48
FPR-900-7-560	914.4	36	60	20	12	1/2	100	250	350	1500	3000	572.6	925.2	10680	10680	10680	10680	10680	8330	6190	M24–M56
FPR-900-8-560	914.4	36	68	25	32	1 1/4	115	300	370	1500	3000	680.9	1132.5	14800	14800	14800	14800	14800	11540	8580	M36–M64
FPR-900-9-560	914.4	36	76	25	11	7/16	130	310	390	1500	3000	795.4	1351.5	19300	19300	19300	19300	19300	15050	11190	M36–M72
FPR-900-10-560	914.4	36	86	30	26	1	140	340	440	1600	3000	1030.6	1688.7	26700	26700	26700	26700	26700	20830	15490	M36–M80
FPR-900-11-560	914.4	36	86	35	-10	-3/8	140	400	460	1600	3000	1219.2	2149.0	36000	36000	36000	36000	36000	28080	20880	M36–M80
FPR-900-12-560	914.4	36	86	40	-10	-3/8	140	420	510	1600	3000	1451.8	2318.1	46050	46050	46050	46050	46050	35920	26710	M36–M80
FPR-900-13-560	914.4	36	86	40	-46	-1 13/16	140	466	570	1700	3000	1645.2	2671.5	56250	56250	56250	56250	56250	43880	32630	M36–M80
FPR-900-4-600	914.4	36	33	10	-38	-1 1/2	55	190	260	1400	3000	368.4	607.8	3160	3160	3160	3160	3160	3160	3160	M8–M30
FPR-900-5-600	914.4	36	39	12	-28	-1 1/8	65	230	280	1400	3000	447.6	723.7	4560	4560	4560	4560	4560	4560	4560	M12–M36
FPR-900-6-600	914.4	36	52	15	-3	-1/8	85	260	350	1400	3000	552.9	904.8	7300	7300	7300	7300	7300	7300	7300	M20–M48
FPR-900-7-600	914.4	36	60	20	12	1/2	100	290	390	1500	3000	718.9	1132.9	10680	10680	10680	10680	10680	10680	10680	M24–M56
FPR-900-8-600	914.4	36	68	25	32	1 1/4	115	350	420	1500	3000	879.3	1386.3	14800	14800	14800	14800	14800	14800	14800	M36–M64
FPR-900-9-600	914.4	36	76	25	11	7/16	130	350	450	1500	3000	980.6	1660.7	19300	19300	19300	19300	19300	19300	19300	M36–M72
FPR-900-10-600	914.4	36	86	30	26	1	140	380	460	1600	3000	1245.3	2087.5	26700	26700	26700	26700	26700	26700	26700	M36–M80
FPR-900-11-600	914.4	36	86	35	-10	-3/8	140	450	540	1600	3000	1464.3	2451.9	36000	36000	36000	36000	36000	36000	36000	M36–M80
FPR-900-12-600	914.4	36	86	40	-10	-3/8	140	470	600	1600	3000	1671.4	2726.7	46050	46050	46050	46050	46050	46050	46050	M36–M80
FPR-900-13-600	914.4	36	86	40	-46	-1 13/16	140	466	590	1700	3000	1990.7	3135.0	56250	56250	56250	56250	56250	56250	56250	M36–M80

FPR RISER CLAMP FLAT PLATE TYPE

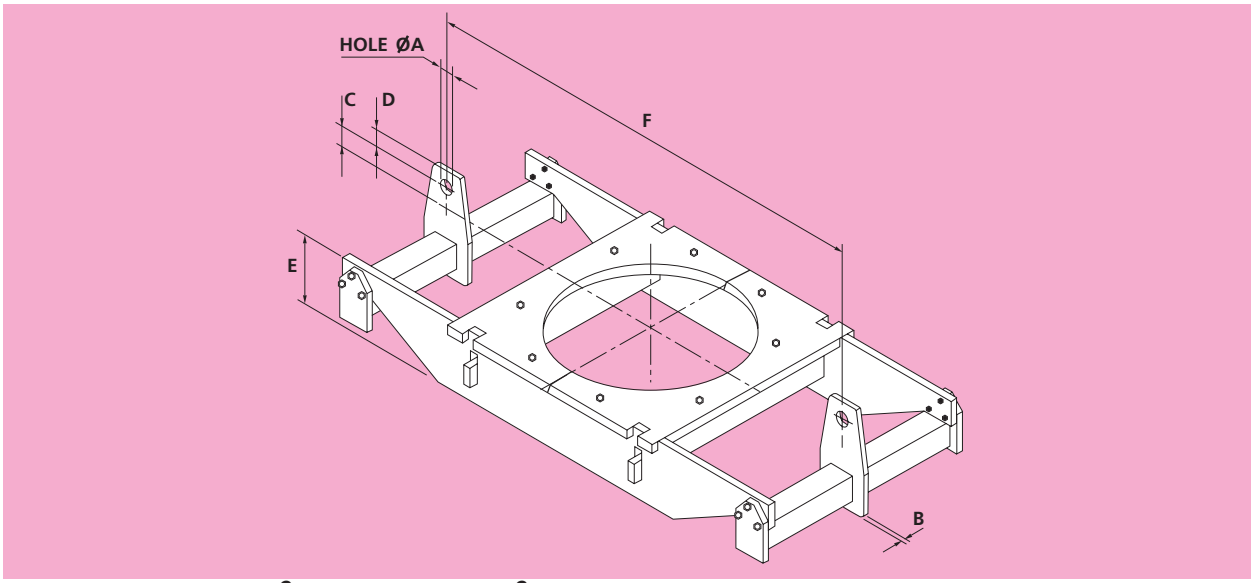

Material: Carbon Steel to 400°C Alloy Steel above 400°C End Beams and Lugs: Carbon Steel. Order by Part No. and Rod Centres "F"

Part Number	Pipe O/D		A	B	C		D	E		F		Weight kg		Load Capacity (kg) at Temperature C							Compatible with Rod Sizes
	mm	in	mm	mm	mm	in	mm	Min.	Max.	Min.	Max.	Min.	Max.	350	400	490	530	560	580	600	
FPR-950-4-400	965.2	38	33	10	-38	-1 1/2	55	188	190	1400	3000	258.2	409.1	3160	3160						M8–M30
FPR-950-5-400	965.2	38	39	12	-28	-1 1/8	65	208	230	1400	3000	334.2	512.0	4560	4560						M12–M36
FPR-950-6-400	965.2	38	52	15	-3	-1/8	85	228	260	1500	3000	443.6	675.7	7300	7300						M20–M48
FPR-950-7-400	965.2	38	60	20	12	1/2	100	258	300	1500	3000	536.3	873.3	10680	10680						M24–M56
FPR-950-8-400	965.2	38	68	25	32	1 1/4	115	260	350	1600	3000	658.3	996.7	14800	14800						M36–M64
FPR-950-9-400	965.2	38	76	25	11	7/16	130	300	370	1600	3000	757.1	1202.7	19300	19300						M36–M72
FPR-950-10-400	965.2	38	86	30	26	1	140	324	410	1600	3000	907.1	1493.8	26700	26700						M36–M80
FPR-950-11-400	965.2	38	86	35	-10	-3/8	140	380	460	1700	3000	1160.2	1849.3	36000	36000						M36–M80
FPR-950-12-400	965.2	38	86	40	-10	-3/8	140	380	480	1700	3000	1411.9	2308.8	46050	46050						M36–M80
FPR-950-13-400	965.2	38	86	40	-46	-1 13/16	140	466	530	1700	3000	1646.2	2641.0	56250	56250						M36–M80
FPR-950-4-490	965.2	38	33	10	-38	-1 1/2	55	188	190	1400	3000	258.2	409.1	3160	3160	3160	2050	1230	880	760	M8–M30
FPR-950-5-490	965.2	38	39	12	-28	-1 1/8	65	208	230	1400	3000	328.7	512.0	4560	4560	4560	2960	1780	1280	1090	M12–M36
FPR-950-6-490	965.2	38	52	15	-3	-1/8	85	228	260	1500	3000	443.6	675.7	7300	7300	7300	4750	2850	2040	1750	M20–M48
FPR-950-7-490	965.2	38	60	20	12	1/2	100	258	290	1500	3000	536.3	856.6	10680	10680	10680	6940	4170	2990	2560	M24–M56
FPR-950-8-490	965.2	38	68	25	32	1 1/4	115	260	340	1600	3000	658.3	980.9	14800	14800	14800	9620	5770	4140	3550	M36–M64
FPR-950-9-490	965.2	38	76	25	11	7/16	130	294	370	1600	3000	747.8	1202.7	19300	19300	19300	12550	7530	5400	4630	M36–M72
FPR-950-10-490	965.2	38	86	30	26	1	140	324	410	1600	3000	907.1	1493.8	26700	26700	26700	17360	10410	7480	6410	M36–M80
FPR-950-11-490	965.2	38	86	35	-10	-3/8	140	380	450	1700	3000	1160.2	1825.0	36000	36000	36000	23400	14040	10080	8640	M36–M80
FPR-950-12-490	965.2	38	86	40	-10	-3/8	140	400	470	1700	3000	1331.2	2279.4	46050	46050	46050	29930	17960	12890	11050	M36–M80
FPR-950-13-490	965.2	38	86	40	-46	-1 13/16	140	466	530	1700	3000	1632.2	2641.0	56250	56250	56250	36560	21940	15750	13500	M36–M80
FPR-950-4-530	965.2	38	33	10	-38	-1 1/2	55	188	200	1400	3000	263.2	420.7	3160	3160	3160	3160	1900	1390	1140	M8–M30
FPR-950-5-530	965.2	38	39	12	-28	-1 1/8	65	208	240	1400	3000	339.3	523.7	4560	4560	4560	4560	2740	2010	1640	M12–M36
FPR-950-6-530	965.2	38	52	15	-3	-1/8	85	228	280	1500	3000	450.3	703.2	7300	7300	7300	7300	4380	3210	2630	M20–M48
FPR-950-7-530	965.2	38	60	20	12	1/2	100	258	310	1600	3000	588.4	889.0	10680	10680	10680	10680	6410	4700	3840	M24–M56
FPR-950-8-530	965.2	38	68	25	32	1 1/4	115	270	340	1600	3000	666.8	1081.3	14800	14800	14800	14800	8880	6510	5330	M36–M64
FPR-950-9-530	965.2	38	76	25	11	7/16	130	294	380	1600	3000	785.2	1221.8	19300	19300	19300	19300	11580	8490	6950	M36–M72
FPR-950-10-530	965.2	38	86	30	26	1	140	350	430	1600	3000	1014.6	1617.5	26700	26700	26700	26700	16020	11750	9610	M36–M80
FPR-950-11-530	965.2	38	86	35	-10	-3/8	140	380	470	1700	3000	1277.1	1872.3	36000	36000	36000	36000	21600	15840	12960	M36–M80
FPR-950-12-530	965.2	38	86	40	-10	-3/8	140	390	480	1700	3000	1425.6	2308.8	46050	46050	46050	46050	27630	20260	16580	M36–M80
FPR-950-13-530	965.2	38	86	40	-46	-1 13/16	140	466	540	1700	3000	1661.4	2670.7	56250	56250	56250	56250	33750	24750	20250	M36–M80
FPR-950-4-560	965.2	38	33	10	-38	-1 1/2	55	188	230	1400	3000	315.4	491.5	3160	3160	3160	3160	3160	2460	1830	M8–M30
FPR-950-5-560	965.2	38	39	12	-28	-1 1/8	65	208	240	1500	3000	419.7	591.7	4560	4560	4560	4560	4560	3560	2640	M12–M36
FPR-950-6-560	965.2	38	52	15	-3	-1/8	85	240	280	1500	3000	508.8	809.7	7300	7300	7300	7300	7300	5690	4230	M20–M48
FPR-950-7-560	965.2	38	60	20	12	1/2	100	260	340	1600	3000	653.6	976.3	10680	10680	10680	10680	10680	8330	6190	M24–M56
FPR-950-8-560	965.2	38	68	25	32	1 1/4	115	300	370	1600	3000	732.1	1175.7	14800	14800	14800	14800	14800	11540	8580	M36–M64
FPR-950-9-560	965.2	38	76	25	11	7/16	130	320	390	1600	3000	865.1	1401.9	19300	19300	19300	19300	19300	15050	11190	M36–M72
FPR-950-10-560	965.2	38	86	30	26	1	140	340	430	1600	3000	1086.0	1725.5	26700	26700	26700	26700	26700	20830	15490	M36–M80
FPR-950-11-560	965.2	38	86	35	-10	-3/8	140	400	500	1700	3000	1302.4	2025.3	36000	36000	36000	36000	36000	28080	20880	M36–M80
FPR-950-12-560	965.2	38	86	40	-10	-3/8	140	430	500	1700	3000	1564.4	2365.9	46050	46050	46050	46050	46050	35920	26710	M36–M80
FPR-950-13-560	965.2	38	86	40	-46	-1 13/16	140	466	560	1700	3000	1740.1	2728.5	56250	56250	56250	56250	56250	43880	32630	M36–M80
FPR-950-4-600	965.2	38	33	10	-38	-1 1/2	55	200	260	1400	3000	400.8	635.0	3160	3160	3160	3160	3160	3160	3160	M8–M30
FPR-950-5-600	965.2	38	39	12	-28	-1 1/8	65	240	270	1500	3000	492.0	736.1	4560	4560	4560	4560	4560	4560	4560	M12–M36
FPR-950-6-600	965.2	38	52	15	-3	-1/8	85	260	350	1500	3000	614.2	960.0	7300	7300	7300	7300	7300	7300	7300	M20–M48
FPR-950-7-600	965.2	38	60	20	12	1/2	100	290	380	1600	3000	803.5	1190.1	10680	10680	10680	10680	10680	10680	10680	M24–M56
FPR-950-8-600	965.2	38	68	25	32	1 1/4	115	350	410	1600	3000	947.0	1415.0	14800	14800	14800	14800	14800	14800	14800	M36–M64
FPR-950-9-600	965.2	38	76	25	11	7/16	130	360	440	1600	3000	1064.4	1698.4	19300	19300	19300	19300	19300	19300	19300	M36–M72
FPR-950-10-600	965.2	38	86	30	26	1	140	390	460	1700	3000	1345.5	2160.1	26700	26700	26700	26700	26700	26700	26700	M36–M80
FPR-950-11-600	965.2	38	86	35	-10	-3/8	140	420	530	1700	3000	1595.6	2505.5	36000	36000	36000	36000	36000	36000	36000	M36–M80
FPR-950-12-600	965.2	38	86	40	-10	-3/8	140	480	590	1700	3000	1802.1	2790.9	46050	46050	46050	46050	46050	46050	46050	M36–M80
FPR-950-13-600	965.2	38	86	40	-46	-1 13/16	140	466	580	1800	3000	2112.3	3198.5	56250	56250	56250	56250	56250	56250	56250	M36–M80

FPR RISER CLAMP FLAT PLATE TYPE

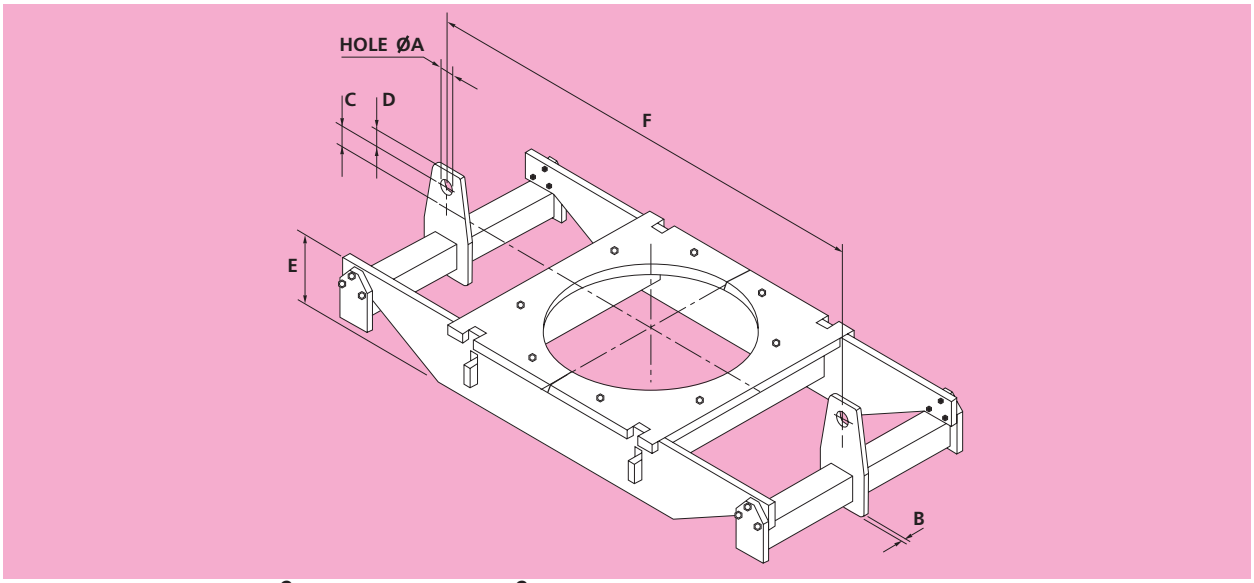

Material: Carbon Steel to 400°C Alloy Steel above 400°C End Beams and Lugs: Carbon Steel. Order by Part No. and Rod Centres "F"

Part Number	Pipe O/D		A	B	C		D	E		F		Weight kg		Load Capacity (kg) at Temperature C							Compatible with Rod Sizes
	mm	in	mm	mm	mm	in	mm	Min.	Max.	Min.	Max.	Min.	Max.	350	400	490	530	560	580	600	
FPR-1000-4-400	1016	40	33	10	-38	-1 1/2	55	188	190	1500	3000	284.0	427.3	3160	3160						M8–M30
FPR-1000-5-400	1016	40	39	12	-28	-1 1/8	65	208	230	1500	3000	360.3	535.1	4560	4560						M12–M36
FPR-1000-6-400	1016	40	52	15	-3	-1/8	85	228	260	1500	3000	470.4	704.1	7300	7300						M20–M48
FPR-1000-7-400	1016	40	60	20	12	1/2	100	258	290	1600	3000	574.9	890.4	10680	10680						M24–M56
FPR-1000-8-400	1016	40	68	25	32	1 1/4	115	260	340	1600	3000	694.8	1019.2	14800	14800						M36–M64
FPR-1000-9-400	1016	40	76	25	11	7/16	130	300	370	1600	3000	798.6	1247.2	19300	19300						M36–M72
FPR-1000-10-400	1016	40	86	30	26	1	140	340	420	1700	3000	1073.3	1656.5	26700	26700						M36–M80
FPR-1000-11-400	1016	40	86	35	-10	-3/8	140	380	450	1700	3000	1230.5	1886.7	36000	36000						M36–M80
FPR-1000-12-400	1016	40	86	40	-10	-3/8	140	430	470	1800	3000	1576.1	2432.7	46050	46050						M36–M80
FPR-1000-13-400	1016	40	86	40	-46	-1 13/16	140	466	530	1800	3000	1761.9	2724.8	56250	56250						M36–M80
FPR-1000-4-490	1016	40	33	10	-38	-1 1/2	55	188	190	1500	3000	278.7	427.3	3160	3160	3160	2050	1230	880	760	M8–M30
FPR-1000-5-490	1016	40	39	12	-28	-1 1/8	65	208	230	1500	3000	360.3	535.1	4560	4560	4560	2960	1780	1280	1090	M12–M36
FPR-1000-6-490	1016	40	52	15	-3	-1/8	85	228	260	1500	3000	470.4	704.1	7300	7300	7300	4750	2850	2040	1750	M20–M48
FPR-1000-7-490	1016	40	60	20	12	1/2	100	258	290	1600	3000	574.9	890.4	10680	10680	10680	6940	4170	2990	2560	M24–M56
FPR-1000-8-490	1016	40	68	25	32	1 1/4	115	260	340	1600	3000	694.8	1019.2	14800	14800	14800	9620	5770	4140	3550	M36–M64
FPR-1000-9-490	1016	40	76	25	11	7/16	130	300	360	1600	3000	798.6	1229.0	19300	19300	19300	12550	7530	5400	4630	M36–M72
FPR-1000-10-490	1016	40	86	30	26	1	140	324	400	1700	3000	967.3	1524.6	26700	26700	26700	17360	10410	7480	6410	M36–M80
FPR-1000-11-490	1016	40	86	35	-10	-3/8	140	380	450	1700	3000	1230.5	1886.7	36000	36000	36000	23400	14040	10080	8640	M36–M80
FPR-1000-12-490	1016	40	86	40	-10	-3/8	140	430	470	1800	3000	1576.1	2432.7	46050	46050	46050	29930	17960	12890	11050	M36–M80
FPR-1000-13-490	1016	40	86	40	-46	-1 13/16	140	466	520	1800	3000	1746.0	2696.6	56250	56250	56250	36560	21940	15750	13500	M36–M80
FPR-1000-4-530	1016	40	33	10	-38	-1 1/2	55	188	200	1500	3000	289.8	439.1	3160	3160	3160	3160	1900	1390	1140	M8–M30
FPR-1000-5-530	1016	40	39	12	-28	-1 1/8	65	208	240	1500	3000	365.6	546.9	4560	4560	4560	4560	2740	2010	1640	M12–M36
FPR-1000-6-530	1016	40	52	15	-3	-1/8	85	228	280	1500	3000	484.6	731.9	7300	7300	7300	7300	4380	3210	2630	M20–M48
FPR-1000-7-530	1016	40	60	20	12	1/2	100	258	310	1600	3000	630.1	923.1	10680	10680	10680	10680	6410	4700	3840	M24–M56
FPR-1000-8-530	1016	40	68	25	32	1 1/4	115	280	340	1600	3000	754.8	1120.9	14800	14800	14800	14800	8880	6510	5330	M36–M64
FPR-1000-9-530	1016	40	76	25	11	7/16	130	300	380	1600	3000	890.2	1266.5	19300	19300	19300	19300	11580	8490	6950	M36–M72
FPR-1000-10-530	1016	40	86	30	26	1	140	330	430	1700	3000	1145.0	1677.2	26700	26700	26700	26700	16020	11750	9610	M36–M80
FPR-1000-11-530	1016	40	86	35	-10	-3/8	140	390	460	1700	3000	1354.4	1911.2	36000	36000	36000	36000	21600	15840	12960	M36–M80
FPR-1000-12-530	1016	40	86	40	-10	-3/8	140	430	480	1800	3000	1592.1	2462.7	46050	46050	46050	46050	27630	20260	16580	M36–M80
FPR-1000-13-530	1016	40	86	40	-46	-1 13/16	140	466	530	1800	3000	1776.6	2724.8	56250	56250	56250	56250	33750	24750	20250	M36–M80
FPR-1000-4-560	1016	40	33	10	-38	-1 1/2	55	188	230	1500	3000	340.8	513.9	3160	3160	3160	3160	3160	2460	1830	M8–M30
FPR-1000-5-560	1016	40	39	12	-28	-1 1/8	65	208	240	1500	3000	446.1	615.7	4560	4560	4560	4560	4560	3560	2640	M12–M36
FPR-1000-6-560	1016	40	52	15	-3	-1/8	85	240	280	1500	3000	539.7	842.8	7300	7300	7300	7300	7300	5690	4230	M20–M48
FPR-1000-7-560	1016	40	60	20	12	1/2	100	260	340	1600	3000	690.1	1014.6	10680	10680	10680	10680	10680	8330	6190	M24–M56
FPR-1000-8-560	1016	40	68	25	32	1 1/4	115	280	360	1600	3000	801.2	1201.3	14800	14800	14800	14800	14800	11540	8580	M36–M64
FPR-1000-9-560	1016	40	76	25	11	7/16	130	320	390	1600	3000	911.3	1452.3	19300	19300	19300	19300	19300	15050	11190	M36–M72
FPR-1000-10-560	1016	40	86	30	26	1	140	350	450	1700	3000	1170.5	1719.8	26700	26700	26700	26700	26700	20830	15490	M36–M80
FPR-1000-11-560	1016	40	86	35	-10	-3/8	140	380	500	1800	3000	1470.1	2095.8	36000	36000	36000	36000	36000	28080	20880	M36–M80
FPR-1000-12-560	1016	40	86	40	-10	-3/8	140	440	500	1800	3000	1742.6	2521.0	46050	46050	46050	46050	46050	35920	26710	M36–M80
FPR-1000-13-560	1016	40	86	40	-46	-1 13/16	140	466	550	1800	3000	1860.7	2783.1	56250	56250	56250	56250	56250	43880	32630	M36–M80
FPR-1000-4-600	1016	40	33	10	-38	-1 1/2	55	200	250	1500	3000	432.4	648.2	3160	3160	3160	3160	3160	3160	3160	M8–M30
FPR-1000-5-600	1016	40	39	12	-28	-1 1/8	65	240	300	1500	3000	522.5	782.4	4560	4560	4560	4560	4560	4560	4560	M12–M36
FPR-1000-6-600	1016	40	52	15	-3	-1/8	85	270	350	1600	3000	667.8	997.9	7300	7300	7300	7300	7300	7300	7300	M20–M48
FPR-1000-7-600	1016	40	60	20	12	1/2	100	300	380	1600	3000	859.6	1234.2	10680	10680	10680	10680	10680	10680	10680	M24–M56
FPR-1000-8-600	1016	40	68	25	32	1 1/4	115	330	420	1700	3000	1071.1	1576.1	14800	14800	14800	14800	14800	14800	14800	M36–M64
FPR-1000-9-600	1016	40	76	25	11	7/16	130	370	440	1700	3000	1149.3	1758.6	19300	19300	19300	19300	19300	19300	19300	M36–M72
FPR-1000-10-600	1016	40	86	30	26	1	140	400	450	1700	3000	1427.2	2203.1	26700	26700	26700	26700	26700	26700	26700	M36–M80
FPR-1000-11-600	1016	40	86	35	-10	-3/8	140	430	520	1800	3000	1713.1	2560.2	36000	36000	36000	36000	36000	36000	36000	M36–M80
FPR-1000-12-600	1016	40	86	40	-10	-3/8	140	490	590	1800	3000	1998.9	2967.3	46050	46050	46050	46050	46050	46050	46050	M36–M80
FPR-1000-13-600	1016	40	86	40	-46	-1 13/16	140	480	580	1800	3000	2357.4	3293.2	56250	56250	56250	56250	56250	56250	56250	M36–M80

PB PIPE CLAMP BASE FOR USE AS A SLIDING BASE OR WITH TYPE 487 SPREADER BEAMS

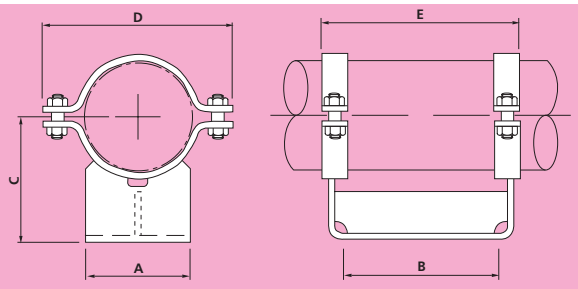

PB1

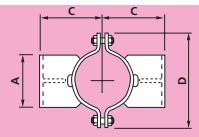

PB2

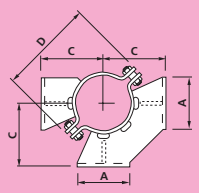

PB3

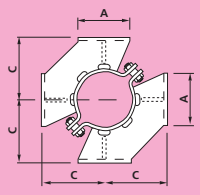

PB4

TYPE PB1 IS FOR USE AS A SLIDING BASE OR WITH SPREADER BEAMS. IF IT IS GUIDED AT THE BASE, THE LOAD CAPACITY IN THE HORIZONTAL DIRECTION IS 30% OF THE STATED VERTICAL LOAD CAPACITY.

TYPE PB2 IS FOR USE AS A GUIDE ON HORIZONTAL OR VERTICAL PIPES, OR WHEN USED WITH THE LEGS VERTICAL AS A VERTICAL RESTRAINT ON HORIZONTAL PIPES IN CASES WHERE THE VERTICAL LOAD CAN ACT UPWARDS.

TYPE PB3 IS FOR USE AS A GUIDE ON HORIZONTAL PIPES. THE STATED LOAD CAPACITY IS APPLICABLE TO BOTH VERTICAL AND LATERAL LOADINGS ACTING CONCURRENTLY.

TYPE PB4 IS A TWO WAY GUIDE WHICH CAN BE USED FOR EITHER HORIZONTAL OR VERTICAL PIPES.

ANY OF THE PIPE BASES CAN ALSO BE USED AS AXIAL RESTRAINTS IF SHEAR LUGS OR COLLARS ARE FITTED TO THE PIPE. THE LOAD CAPACITY IN THE DIRECTION OF THE PIPE AXIS IS LIMITED TO 30% OF THE LOAD CAPACITY IN THE VERTICAL DIRECTION.

Material: Carbon Steel to 400°C Alloy Steel above 400°C Base Plate Weldable Carbon Steel

Part No. (Type PB1)	Pipe O/D		A	B	C		D	E	Max. Temp.	Max Lagging Thick.	Weight				Load Capacity (See Notes)
For Multi-Leg types, replace PB1 with PB2, PB3 or PB4	mm	in	mm	mm	mm	in	mm	mm	C	mm	PB1 kgf	PB2 kgf	PB3 kgf	PB4 kgf	kgf
PB1-15-1-400	21.3	0.839	50	150	90	3 9/16	96	185	400	75	1.7	3.0	4.2	5.4	360
PB1-15-1-530	21.3	0.839	70	150	110	4 5/16	96	190	530	95	2.6	4.4	6.2	8.0	360
PB1-15-1-600	21.3	0.839	80	150	140	5 1/2	96	190	600	125	3.0	5.4	7.7	10	360
PB1-20-1-400	26.7	1.051	50	150	90	3 9/16	106	185	400	75	1.8	3.0	4.2	5.4	360
PB1-20-1-530	26.7	1.051	70	150	110	4 5/16	106	190	530	95	2.6	4.5	6.3	8.1	360
PB1-20-1-600	26.7	1.051	80	150	140	5 1/2	106	190	600	125	3.1	5.4	7.7	10	360
PB1-25-1-400	33.4	1.315	50	150	90	3 9/16	116	185	400	70	1.9	3.1	4.3	5.5	360
PB1-25-1-530	33.4	1.315	70	150	120	4 3/4	116	190	530	100	2.8	4.7	6.5	8.4	360
PB1-25-1-600	33.4	1.315	80	150	140	5 1/2	116	190	600	120	3.2	5.5	7.8	10	360
PB1-32-1-400	42.2	1.661	60	150	100	3 15/16	126	185	400	75	2.2	3.7	5.2	6.7	360
PB1-32-1-530	42.2	1.661	70	150	120	4 3/4	126	190	530	95	2.9	4.7	6.6	8.4	360
PB1-32-1-600	42.2	1.661	90	150	150	5 7/8	126	190	600	125	3.7	6.3	8.9	12	360
PB1-40-1-400	48.3	1.902	60	150	100	3 15/16	126	185	400	75	2.2	3.7	5.2	6.6	360
PB1-40-1-530	48.3	1.902	80	150	130	5 1/8	136	190	530	105	3.3	5.5	7.7	9.9	360
PB1-40-1-600	48.3	1.902	90	150	150	5 7/8	136	190	600	125	3.7	6.4	9.0	12	360
PB1-50-2-400	60.3	2.375	70	150	110	4 5/16	146	203	400	75	2.7	4.4	6.2	8.0	530
PB1-50-2-530	60.3	2.375	80	150	130	5 1/8	146	208	530	95	3.4	5.6	7.7	9.9	530
PB1-50-2-600	60.3	2.375	100	150	160	6 5/16	146	208	600	125	4.2	7.2	10	13	530
PB1-65-2-400	73	2.875	70	200	110	4 5/16	166	253	400	70	3.1	5.2	7.2	9.3	530
PB1-65-2-530	73	2.875	80	200	140	5 1/2	166	258	530	100	4.0	6.6	9.2	12	530
PB1-65-2-600	73	2.875	100	200	160	6 5/16	176	268	600	120	6.5	9.9	13	17	530
PB1-80-2-400	88.9	3.500	100	200	160	6 5/16	176	253	400	115	4.5	7.9	11	15	530
PB1-80-2-530	88.9	3.500	100	200	170	6 11/16	176	258	530	125	5.0	8.5	12	15	530
PB1-80-2-600	88.9	3.500	110	200	180	7 1/16	196	268	600	135	7.5	11	15	19	530
PB1-90-2-400	101.6	4.000	100	200	160	6 5/16	186	253	400	105	4.6	8.0	11	15	530
PB1-90-2-530	101.6	4.000	110	200	180	7 1/16	196	258	530	125	5.7	9.6	13	17	530
PB1-90-2-600	101.6	4.000	110	200	190	7 1/2	206	268	600	135	7.8	12	16	20	530
PB1-100-3-400	114.3	4.500	100	200	170	6 11/16	206	253	400	110	4.8	8.2	12	15	1010
PB1-100-3-530	114.3	4.500	110	200	190	7 1/2	206	264	530	130	7.3	13	18	24	1010
PB1-100-3-600	114.3	4.500	120	200	200	7 7/8	226	274	600	140	10	16	22	28	1010
PB1-125-3-400	141.3	5.563	110	200	180	7 1/16	226	253	400	105	5.4	9.2	13	17	1010
PB1-125-3-530	141.3	5.563	120	200	200	7 7/8	236	264	530	125	8.2	14	20	26	1010

PB PIPE CLAMP BASE FOR USE AS A SLIDING BASE OR WITH TYPE 487 SPREADER BEAMS

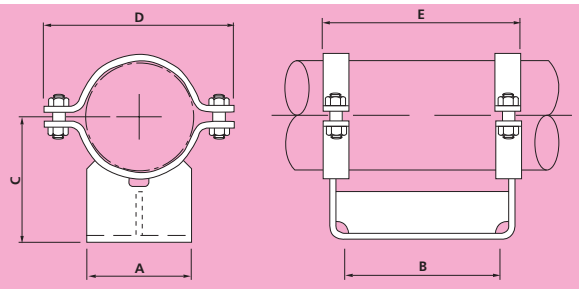

PB1

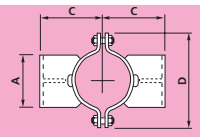

PB2

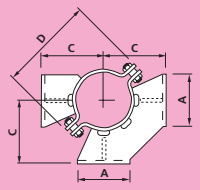

PB3

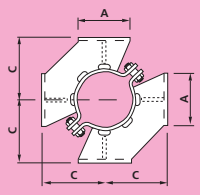

PB4

TYPE PB1 IS FOR USE AS A SLIDING BASE OR WITH SPREADER BEAMS. IF IT IS GUIDED AT THE BASE, THE LOAD CAPACITY IN THE HORIZONTAL DIRECTION IS 30% OF THE STATED VERTICAL LOAD CAPACITY.

TYPE PB2 IS FOR USE AS A GUIDE ON HORIZONTAL OR VERTICAL PIPES, OR WHEN USED WITH THE LEGS VERTICAL AS A VERTICAL RESTRAINT ON HORIZONTAL PIPES IN CASES WHERE THE VERTICAL LOAD CAN ACT UPWARDS.

TYPE PB3 IS FOR USE AS A GUIDE ON HORIZONTAL PIPES. THE STATED LOAD CAPACITY IS APPLICABLE TO BOTH VERTICAL AND LATERAL LOADINGS ACTING CONCURRENTLY.

TYPE PB4 IS A TWO WAY GUIDE WHICH CAN BE USED FOR EITHER HORIZONTAL OR VERTICAL PIPES.

ANY OF THE PIPE BASES CAN ALSO BE USED AS AXIAL RESTRAINTS IF SHEAR LUGS OR COLLARS ARE FITTED TO THE PIPE. THE LOAD CAPACITY IN THE DIRECTION OF THE PIPE AXIS IS LIMITED TO 30% OF THE LOAD CAPACITY IN THE VERTICAL DIRECTION.

Material: Carbon Steel to 400°C Alloy Steel above 400°C Base Plate Weldable Carbon Steel

Part No. (Type PB1)	Pipe O/D		A	B	C		D	E	Max. Temp.	Max Lagging Thick.	Weight				Load Capacity (See Notes)
For Multi-Leg types, replace PB1 with PB2, PB3 or PB4	mm	in	mm	mm	mm	in	mm	mm	C	mm	PB1 kgf	PB2 kgf	PB3 kgf	PB4 kgf	kgf
PB1-125-3-600	141.3	5.563	130	200	210	8 1/4	246	274	600	135	11	18	24	31	1010
PB1-150-4-400	168.3	6.625	120	200	200	7 7/8	288	264	400	115	9.4	15	21	27	1580
PB1-150-4-530	168.3	6.625	130	200	210	8 1/4	276	274	530	125	12	18	25	31	1580
PB1-150-4-600	168.3	6.625	140	200	230	9 1/16	276	274	600	145	13	20	27	35	1580
PB1-175-5-400	193.7	7.625	140	250	240	9 7/16	318	314	400	140	12	21	29	37	2280
PB1-175-5-530	193.7	7.625	150	250	250	9 13/16	306	324	530	150	15	24	33	42	2280
PB1-175-5-600	193.7	7.625	160	250	270	10 5/8	306	340	600	170	20	33	46	58	2280
PB1-200-3-400	219.1	8.625	150	250	250	9 13/16	316	308	400	140	9.8	16	23	30	1010
PB1-200-6-400	219.1	8.625	150	250	250	9 13/16	380	346	400	140	24	38	52	66	3650
PB1-200-3-530	219.1	8.625	160	250	260	10 1/4	336	324	530	150	17	26	36	46	1010
PB1-200-6-530	219.1	8.625	160	250	270	10 5/8	336	356	530	160	27	42	57	73	3650
PB1-200-3-600	219.1	8.625	170	250	280	11	336	324	600	170	18	28	39	50	1010
PB1-200-6-600	219.1	8.625	170	250	280	11	356	375	600	170	38	59	80	102	3650
PB1-225-3-400	244.5	9.625	160	250	260	10 1/4	336	308	400	135	11	18	25	32	1010
PB1-225-6-400	244.5	9.625	160	250	270	10 5/8	410	346	400	145	27	42	57	72	3650
PB1-225-3-530	244.5	9.625	170	250	280	11	356	324	530	155	18	29	39	50	1010
PB1-225-6-530	244.5	9.625	170	250	280	11	366	356	530	155	29	45	62	78	3650
PB1-225-3-600	244.5	9.625	170	250	290	11 7/16	356	324	600	165	18	29	40	51	1010
PB1-225-6-600	244.5	9.625	180	250	300	11 13/16	398	375	600	175	42	65	88	111	3650
PB1-250-4-400	273	10.750	170	250	280	11	398	314	400	140	16	26	37	47	1580
PB1-250-7-400	273	10.750	170	250	280	11	440	346	400	140	29	45	61	77	5340
PB1-250-4-530	273	10.750	170	250	290	11 7/16	386	324	530	150	19	29	40	51	1580
PB1-250-7-530	273	10.750	180	250	300	11 13/16	396	365	530	160	36	59	82	105	5340
PB1-250-4-600	273	10.750	180	250	300	11 13/16	396	344	600	160	25	37	48	60	1580
PB1-250-7-600	273	10.750	190	250	310	12 3/16	428	395	600	170	50	75	99	123	5340
PB1-300-4-400	323.9	12.750	190	300	320	12 5/8	448	364	400	155	20	33	47	60	1580
PB1-300-6-400	323.9	12.750	190	300	320	12 5/8	490	396	400	155	35	56	77	98	3650
PB1-300-8-400	323.9	12.750	190	300	320	12 5/8	542	410	400	155	54	81	107	133	7400
PB1-300-4-530	323.9	12.750	200	300	330	13	446	374	530	165	24	38	53	67	1580
PB1-300-6-530	323.9	12.750	200	300	330	13	468	406	530	165	39	61	83	106	3650
PB1-300-8-530	323.9	12.750	200	300	340	13 3/8	478	425	530	175	52	81	110	139	7400
PB1-300-4-600	323.9	12.750	220	300	370	14 9/16	446	394	600	205	33	50	67	84	1580

PB PIPE CLAMP BASE FOR USE AS A SLIDING BASE OR WITH TYPE 487 SPREADER BEAMS

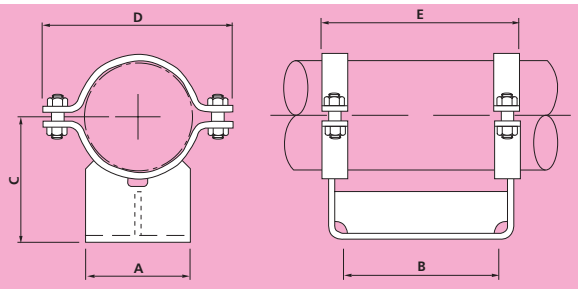

PB1

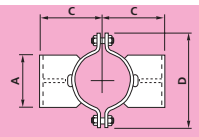

PB2

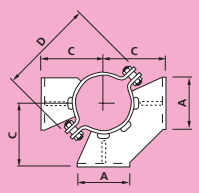

PB3

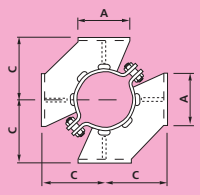

PB4

TYPE PB1 IS FOR USE AS A SLIDING BASE OR WITH SPREADER BEAMS. IF IT IS GUIDED AT THE BASE, THE LOAD CAPACITY IN THE HORIZONTAL DIRECTION IS 30% OF THE STATED VERTICAL LOAD CAPACITY.

TYPE PB2 IS FOR USE AS A GUIDE ON HORIZONTAL OR VERTICAL PIPES, OR WHEN USED WITH THE LEGS VERTICAL AS A VERTICAL RESTRAINT ON HORIZONTAL PIPES IN CASES WHERE THE VERTICAL LOAD CAN ACT UPWARDS.

TYPE PB3 IS FOR USE AS A GUIDE ON HORIZONTAL PIPES. THE STATED LOAD CAPACITY IS APPLICABLE TO BOTH VERTICAL AND LATERAL LOADINGS ACTING CONCURRENTLY.

TYPE PB4 IS A TWO WAY GUIDE WHICH CAN BE USED FOR EITHER HORIZONTAL OR VERTICAL PIPES.

ANY OF THE PIPE BASES CAN ALSO BE USED AS AXIAL RESTRAINTS IF SHEAR LUGS OR COLLARS ARE FITTED TO THE PIPE. THE LOAD CAPACITY IN THE DIRECTION OF THE PIPE AXIS IS LIMITED TO 30% OF THE LOAD CAPACITY IN THE VERTICAL DIRECTION.

Material: Carbon Steel to 400°C Alloy Steel above 400°C Base Plate Weldable Carbon Steel

Part No. (Type PB1)	Pipe O/D		A	B	C		D	E	Max. Temp.	Max Lagging Thick.	Weight				Load Capacity (See Notes)
For Multi-Leg types, replace PB1 with PB2, PB3 or PB4	mm	in	mm	mm	mm	in	mm	mm	C	mm	PB1 kgf	PB2 kgf	PB3 kgf	PB4 kgf	kgf
PB1-300-6-600	323.9	12.750	220	300	370	14 9/16	478	445	600	205	63	96	129	163	3650
PB1-300-8-600	323.9	12.750	230	300	380	14 15/16	498	460	600	215	88	137	185	234	7400
PB1-350-6-400	355.6	14.000	210	300	340	13 3/8	520	396	400	160	39	63	86	110	3650
PB1-350-7-400	355.6	14.000	210	300	340	13 3/8	520	396	400	160	39	63	86	110	5340
PB1-350-9-400	355.6	14.000	210	300	340	13 3/8	572	425	400	160	71	112	153	194	9650
PB1-350-6-530	355.6	14.000	210	300	350	13 3/4	498	416	530	170	44	68	92	116	3650
PB1-350-7-530	355.6	14.000	210	300	350	13 3/4	498	425	530	170	51	81	112	142	5340
PB1-350-9-530	355.6	14.000	220	300	360	14 3/16	518	440	530	180	70	115	159	204	9650
PB1-350-6-600	355.6	14.000	230	300	390	15 3/8	538	445	600	210	79	114	150	185	3650
PB1-350-7-600	355.6	14.000	230	300	390	15 3/8	538	445	600	210	79	114	150	185	5340
PB1-350-9-600	355.6	14.000	230	300	390	15 3/8	538	460	600	210	92	141	189	238	9650
PB1-400-6-400	406.4	16.000	240	300	360	14 3/16	590	391	400	155	47	75	102	129	3650
PB1-400-8-400	406.4	16.000	240	300	360	14 3/16	622	410	400	155	67	102	136	171	7400
PB1-400-10-400	406.4	16.000	240	300	370	14 9/16	660	465	400	165	110	172	235	297	13350
PB1-400-6-530	406.4	16.000	240	300	370	14 9/16	568	416	530	165	56	84	111	139	3650
PB1-400-8-530	406.4	16.000	240	300	380	14 15/16	568	445	530	175	71	107	143	179	7400
PB1-400-10-530	406.4	16.000	240	300	390	15 3/8	610	475	530	185	114	178	242	307	13350
PB1-400-6-600	406.4	16.000	250	300	410	16 1/8	588	445	600	205	87	126	165	204	3650
PB1-400-8-600	406.4	16.000	250	300	420	16 9/16	588	460	600	215	103	157	211	265	7400
PB1-400-10-600	406.4	16.000	250	300	420	16 9/16	630	465	600	215	126	196	266	335	13350
PB1-450-6-400	457.2	18.000	270	300	390	15 3/8	640	391	400	160	54	85	116	148	3650
PB1-450-9-400	457.2	18.000	270	300	390	15 3/8	682	425	400	160	91	146	201	256	9650
PB1-450-11-400	457.2	18.000	270	300	400	15 3/4	738	500	400	170	154	243	332	421	18000
PB1-450-6-530	457.2	18.000	270	300	400	15 3/4	618	416	530	170	64	95	127	159	3650
PB1-450-9-530	457.2	18.000	270	300	410	16 1/8	618	460	530	180	96	153	210	267	9650
PB1-450-11-530	457.2	18.000	270	300	420	16 9/16	692	480	530	190	154	245	336	428	18000
PB1-450-6-600	457.2	18.000	270	300	440	17 5/16	638	445	600	210	97	140	183	226	3650
PB1-450-9-600	457.2	18.000	270	300	450	17 11/16	638	460	600	220	113	173	233	293	9650
PB1-450-11-600	457.2	18.000	280	300	460	18 1/8	700	490	600	230	183	283	383	482	18000
PB1-500-6-400	508	20.000	300	400	440	17 5/16	690	491	400	185	67	110	152	195	3650
PB1-500-9-400	508	20.000	300	400	450	17 11/16	732	525	400	195	115	189	264	339	9650
PB1-500-12-400	508	20.000	300	400	460	18 1/8	788	600	400	205	190	310	429	549	23025

PB PIPE CLAMP BASE FOR USE AS A SLIDING BASE OR WITH TYPE 487 SPREADER BEAMS

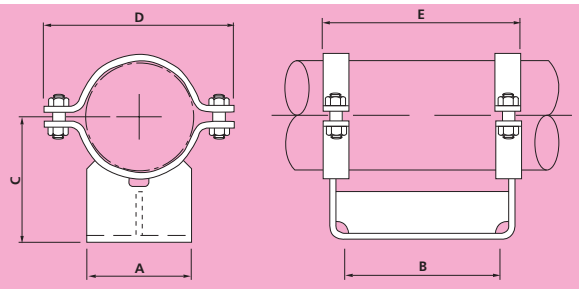

PB1

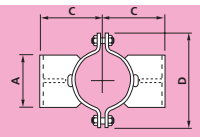

PB2

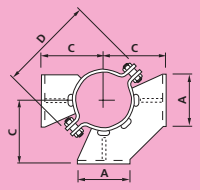

PB3

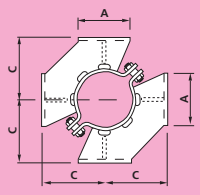

PB4

TYPE PB1 IS FOR USE AS A SLIDING BASE OR WITH SPREADER BEAMS. IF IT IS GUIDED AT THE BASE, THE LOAD CAPACITY IN THE HORIZONTAL DIRECTION IS 30% OF THE STATED VERTICAL LOAD CAPACITY.

TYPE PB2 IS FOR USE AS A GUIDE ON HORIZONTAL OR VERTICAL PIPES, OR WHEN USED WITH THE LEGS VERTICAL AS A VERTICAL RESTRAINT ON HORIZONTAL PIPES IN CASES WHERE THE VERTICAL LOAD CAN ACT UPWARDS.

TYPE PB3 IS FOR USE AS A GUIDE ON HORIZONTAL PIPES. THE STATED LOAD CAPACITY IS APPLICABLE TO BOTH VERTICAL AND LATERAL LOADINGS ACTING CONCURRENTLY.

TYPE PB4 IS A TWO WAY GUIDE WHICH CAN BE USED FOR EITHER HORIZONTAL OR VERTICAL PIPES.

ANY OF THE PIPE BASES CAN ALSO BE USED AS AXIAL RESTRAINTS IF SHEAR LUGS OR COLLARS ARE FITTED TO THE PIPE. THE LOAD CAPACITY IN THE DIRECTION OF THE PIPE AXIS IS LIMITED TO 30% OF THE LOAD CAPACITY IN THE VERTICAL DIRECTION.

Material: Carbon Steel to 400°C Alloy Steel above 400°C Base Plate Weldable Carbon Steel

Part No. (Type PB1)	Pipe O/D		A	B	C		D	E	Max. Temp.	Max Lagging Thick.	Weight				Load Capacity (See Notes)
For Multi-Leg types, replace PB1 with PB2, PB3 or PB4	mm	in	mm	mm	mm	in	mm	mm	C	mm	PB1 kgf	PB2 kgf	PB3 kgf	PB4 kgf	kgf
PB1-500-6-530	508	20.000	300	400	450	17 11/16	668	516	530	195	78	121	164	207	3650
PB1-500-9-530	508	20.000	300	400	460	18 1/8	668	560	530	205	119	195	271	347	9650
PB1-500-12-530	508	20.000	300	400	480	18 7/8	752	610	530	225	240	410	581	752	23025
PB1-500-6-600	508	20.000	300	400	490	19 5/16	698	545	600	235	117	174	232	289	3650
PB1-500-9-600	508	20.000	300	400	500	19 11/16	698	570	600	245	144	224	304	383	9650
PB1-500-12-600	508	20.000	310	400	520	20 1/2	772	630	600	265	286	470	654	838	23025
PB1-550-6-400	558.8	22.000	330	400	460	18 1/8	740	491	400	180	74	121	168	216	3650
PB1-550-8-400	558.8	22.000	330	400	470	18 1/2	782	510	400	190	104	164	225	286	7400
PB1-550-10-400	558.8	22.000	330	400	480	18 7/8	810	565	400	200	169	277	385	493	13350
PB1-550-13-400	558.8	22.000	330	400	490	19 5/16	896	650	400	210	304	491	679	866	28125
PB1-550-6-530	558.8	22.000	330	400	480	18 7/8	718	516	530	200	86	135	183	232	3650
PB1-550-8-530	558.8	22.000	330	400	480	18 7/8	760	545	530	200	126	187	249	311	7400
PB1-550-10-530	558.8	22.000	330	400	490	19 5/16	760	575	530	210	174	283	392	501	13350
PB1-550-13-530	558.8	22.000	330	400	500	19 11/16	830	650	530	220	299	489	678	868	28125
PB1-550-6-600	558.8	22.000	330	400	520	20 1/2	748	545	600	240	129	193	258	322	3650
PB1-550-8-600	558.8	22.000	330	400	520	20 1/2	768	550	600	240	161	249	337	425	7400
PB1-550-10-600	558.8	22.000	330	400	530	20 7/8	780	575	600	250	195	310	424	538	13350
PB1-550-13-600	558.8	22.000	330	400	550	21 5/8	890	670	600	270	427	686	945	1204	28125
PB1-600-6-400	609.6	24.000	360	400	490	19 5/16	800	491	400	185	81	134	187	240	3650
PB1-600-8-400	609.6	24.000	360	400	490	19 5/16	842	510	400	185	113	180	247	314	7400
PB1-600-10-400	609.6	24.000	360	400	500	19 11/16	870	565	400	195	184	303	422	541	13350
PB1-600-13-400	609.6	24.000	360	400	520	20 1/2	946	650	400	215	333	541	749	958	28125
PB1-600-6-530	609.6	24.000	360	400	500	19 11/16	778	516	530	195	94	148	201	255	3650
PB1-600-8-530	609.6	24.000	360	400	500	19 11/16	820	545	530	195	138	206	273	341	7400
PB1-600-10-530	609.6	24.000	360	400	510	20 1/16	820	575	530	205	190	310	430	551	13350
PB1-600-13-530	609.6	24.000	360	400	530	20 7/8	910	630	530	225	332	542	752	962	28125
PB1-600-6-600	609.6	24.000	360	400	540	21 1/4	798	545	600	235	140	211	282	353	3650
PB1-600-8-600	609.6	24.000	360	400	550	21 5/8	818	550	600	245	176	274	372	470	7400
PB1-600-10-600	609.6	24.000	360	400	550	21 5/8	840	585	600	245	223	348	474	599	13350
PB1-600-13-600	609.6	24.000	360	400	580	22 13/16	950	670	600	275	469	756	1043	1330	28125
PB1-650-6-400	660.4	26.000	390	400	540	21 1/4	870	501	400	205	109	168	228	288	3650
PB1-650-8-400	660.4	26.000	390	400	540	21 1/4	892	510	400	205	125	201	277	353	7400

PB PIPE CLAMP BASE FOR USE AS A SLIDING BASE OR WITH TYPE 487 SPREADER BEAMS

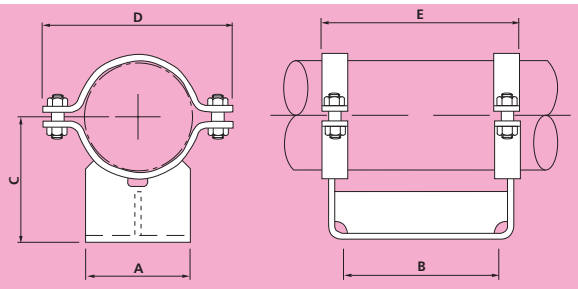

PB1

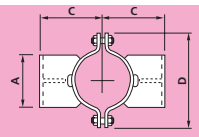

PB2

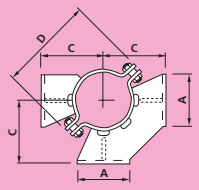

PB3

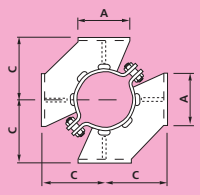

PB4

TYPE PB1 IS FOR USE AS A SLIDING BASE OR WITH SPREADER BEAMS. IF IT IS GUIDED AT THE BASE, THE LOAD CAPACITY IN THE HORIZONTAL DIRECTION IS 30% OF THE STATED VERTICAL LOAD CAPACITY.

TYPE PB2 IS FOR USE AS A GUIDE ON HORIZONTAL OR VERTICAL PIPES, OR WHEN USED WITH THE LEGS VERTICAL AS A VERTICAL RESTRAINT ON HORIZONTAL PIPES IN CASES WHERE THE VERTICAL LOAD CAN ACT UPWARDS.

TYPE PB3 IS FOR USE AS A GUIDE ON HORIZONTAL PIPES. THE STATED LOAD CAPACITY IS APPLICABLE TO BOTH VERTICAL AND LATERAL LOADINGS ACTING CONCURRENTLY.

TYPE PB4 IS A TWO WAY GUIDE WHICH CAN BE USED FOR EITHER HORIZONTAL OR VERTICAL PIPES.

ANY OF THE PIPE BASES CAN ALSO BE USED AS AXIAL RESTRAINTS IF SHEAR LUGS OR COLLARS ARE FITTED TO THE PIPE. THE LOAD CAPACITY IN THE DIRECTION OF THE PIPE AXIS IS LIMITED TO 30% OF THE LOAD CAPACITY IN THE VERTICAL DIRECTION.

Material: Carbon Steel to 400°C Alloy Steel above 400°C Base Plate Weldable Carbon Steel

Part No. (Type PB1)	Pipe O/D		A	B	C		D	E	Max. Temp.	Max Lagging Thick.	Weight				Load Capacity (See Notes)
For Multi-Leg types, replace PB1 with PB2, PB3 or PB4	mm	in	mm	mm	mm	in	mm	mm	C	mm	PB1 kgf	PB2 kgf	PB3 kgf	PB4 kgf	kgf
PB1-650-10-400	660.4	26.000	390	400	550	21 5/8	920	565	400	215	205	339	473	608	13350
PB1-650-13-400	660.4	26.000	390	400	570	22 7/16	996	670	400	235	387	622	857	1092	28125
PB1-650-6-530	660.4	26.000	390	400	580	22 13/16	828	516	530	245	107	170	233	295	3650
PB1-650-8-530	660.4	26.000	390	400	580	22 13/16	848	545	530	245	153	233	312	392	7400
PB1-650-10-530	660.4	26.000	390	400	590	23 1/4	870	575	530	255	215	356	496	637	13350
PB1-650-13-530	660.4	26.000	390	400	600	23 5/8	960	630	530	265	372	613	855	1096	28125
PB1-650-6-600	660.4	26.000	390	400	620	24 7/16	848	545	600	285	157	240	324	407	3650
PB1-650-8-600	660.4	26.000	390	400	620	24 7/16	868	550	600	285	197	310	423	537	7400
PB1-650-10-600	660.4	26.000	390	400	630	24 13/16	890	595	600	295	260	406	552	699	13350
PB1-650-13-600	660.4	26.000	390	400	650	25 9/16	1000	670	600	315	522	851	1179	1508	28125
PB1-700-6-400	711.2	28.000	420	500	560	22 1/16	920	601	400	200	125	198	271	344	3650
PB1-700-8-400	711.2	28.000	420	500	570	22 7/16	942	610	400	210	146	239	333	426	7400
PB1-700-10-400	711.2	28.000	420	500	580	22 13/16	970	665	400	220	239	403	567	731	13350
PB1-700-13-400	711.2	28.000	420	500	590	23 1/4	1046	770	400	230	443	724	1006	1287	28125
PB1-700-6-530	711.2	28.000	420	500	600	23 5/8	878	616	530	240	123	199	276	352	3650
PB1-700-8-530	711.2	28.000	420	500	610	24	920	645	530	250	177	274	372	469	7400
PB1-700-10-530	711.2	28.000	420	500	620	24 7/16	920	675	530	260	250	421	592	763	13350
PB1-700-13-530	711.2	28.000	420	500	630	24 13/16	1010	730	530	270	429	720	1012	1303	28125
PB1-700-6-600	711.2	28.000	420	500	640	25 3/16	898	645	600	280	179	279	380	480	3650
PB1-700-8-600	711.2	28.000	420	500	650	25 9/16	918	650	600	290	227	364	502	639	7400
PB1-700-10-600	711.2	28.000	420	500	650	25 9/16	960	675	600	290	297	472	647	821	13350
PB1-700-13-600	711.2	28.000	420	500	680	26 3/4	1050	770	600	320	598	990	1383	1776	28125
PB1-750-6-400	762	30.000	450	500	590	23 1/4	970	601	400	205	135	214	294	373	3650
PB1-750-8-400	762	30.000	450	500	590	23 1/4	992	610	400	205	157	258	358	459	7400
PB1-750-10-400	762	30.000	450	500	600	23 5/8	1020	665	400	215	256	433	610	787	13350
PB1-750-13-400	762	30.000	450	500	620	24 7/16	1096	770	400	235	477	783	1090	1396	28125
PB1-750-6-530	762	30.000	450	500	630	24 13/16	928	616	530	245	133	216	299	382	3650
PB1-750-8-530	762	30.000	450	500	630	24 13/16	970	645	530	245	190	295	400	505	7400
PB1-750-10-530	762	30.000	450	500	640	25 3/16	970	675	530	255	269	453	637	821	13350
PB1-750-13-530	762	30.000	450	500	660	26	1060	730	530	275	463	780	1096	1413	28125
PB1-750-6-600	762	30.000	450	500	670	26 3/8	948	645	600	285	193	302	411	521	3650
PB1-750-8-600	762	30.000	450	500	670	26 3/8	978	650	600	285	244	392	540	689	7400

PB PIPE CLAMP BASE FOR USE AS A SLIDING BASE OR WITH TYPE 487 SPREADER BEAMS

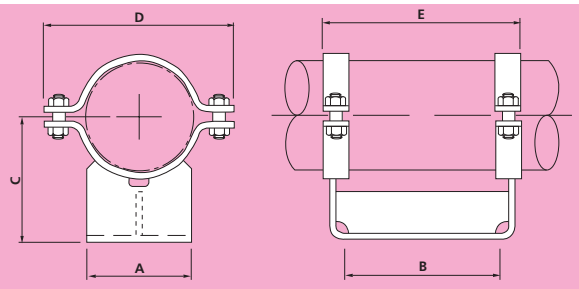

PB1

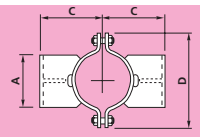

PB2

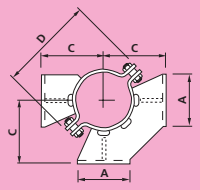

PB3

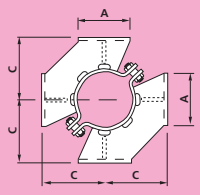

PB4

TYPE PB1 IS FOR USE AS A SLIDING BASE OR WITH SPREADER BEAMS. IF IT IS GUIDED AT THE BASE, THE LOAD CAPACITY IN THE HORIZONTAL DIRECTION IS 30% OF THE STATED VERTICAL LOAD CAPACITY.

TYPE PB2 IS FOR USE AS A GUIDE ON HORIZONTAL OR VERTICAL PIPES, OR WHEN USED WITH THE LEGS VERTICAL AS A VERTICAL RESTRAINT ON HORIZONTAL PIPES IN CASES WHERE THE VERTICAL LOAD CAN ACT UPWARDS.

TYPE PB3 IS FOR USE AS A GUIDE ON HORIZONTAL PIPES. THE STATED LOAD CAPACITY IS APPLICABLE TO BOTH VERTICAL AND LATERAL LOADINGS ACTING CONCURRENTLY.

TYPE PB4 IS A TWO WAY GUIDE WHICH CAN BE USED FOR EITHER HORIZONTAL OR VERTICAL PIPES.

ANY OF THE PIPE BASES CAN ALSO BE USED AS AXIAL RESTRAINTS IF SHEAR LUGS OR COLLARS ARE FITTED TO THE PIPE. THE LOAD CAPACITY IN THE DIRECTION OF THE PIPE AXIS IS LIMITED TO 30% OF THE LOAD CAPACITY IN THE VERTICAL DIRECTION.

Material: Carbon Steel to 400°C Alloy Steel above 400°C Base Plate Weldable Carbon Steel

Part No. (Type PB1)	Pipe O/D		A	B	C		D	E	Max. Temp.	Max Lagging Thick.	Weight				Load Capacity (See Notes)
For Multi-Leg types, replace PB1 with PB2, PB3 or PB4	mm	in	mm	mm	mm	in	mm	mm	C	mm	PB1 kgf	PB2 kgf	PB3 kgf	PB4 kgf	kgf
PB1-750-10-600	762	30.000	450	500	680	26 3/4	1010	675	600	295	320	510	701	891	13350
PB1-750-13-600	762	30.000	450	500	700	27 9/16	1100	770	600	315	640	1063	1486	1910	28125
PB1-800-6-400	812.8	32.000	480	500	610	24	1020	601	400	200	144	229	315	400	3650
PB1-800-8-400	812.8	32.000	480	500	620	24 7/16	1042	610	400	210	169	278	387	497	7400
PB1-800-10-400	812.8	32.000	480	500	630	24 13/16	1070	685	400	220	294	486	678	870	13350
PB1-800-13-400	812.8	32.000	480	500	640	25 3/16	1176	770	400	230	548	876	1203	1531	28125
PB1-800-6-530	812.8	32.000	480	500	650	25 9/16	978	616	530	240	142	231	321	410	3650
PB1-800-8-530	812.8	32.000	480	500	660	26	1020	645	530	250	204	318	432	545	7400
PB1-800-10-530	812.8	32.000	480	500	670	26 3/8	1042	685	530	260	300	499	699	899	13350
PB1-800-13-530	812.8	32.000	480	500	680	26 3/4	1110	730	530	270	494	834	1174	1514	28125
PB1-800-6-600	812.8	32.000	480	500	690	27 3/16	1008	645	600	280	207	324	441	559	3650
PB1-800-8-600	812.8	32.000	480	500	700	27 9/16	1050	660	600	290	275	435	596	757	7400
PB1-800-10-600	812.8	32.000	480	500	700	27 9/16	1070	675	600	290	342	546	751	955	13350
PB1-800-13-600	812.8	32.000	480	500	730	28 3/4	1160	770	600	320	688	1146	1604	2061	28125
PB1-850-6-400	863.6	34.000	510	500	640	25 3/16	1070	601	400	205	154	247	339	432	3650
PB1-850-8-400	863.6	34.000	510	500	640	25 3/16	1092	610	400	205	180	297	414	531	7400
PB1-850-10-400	863.6	34.000	510	500	650	25 9/16	1120	685	400	215	313	519	724	930	13350
PB1-850-13-400	863.6	34.000	510	500	670	26 3/8	1226	770	400	235	585	939	1293	1647	28125
PB1-850-6-530	863.6	34.000	510	500	680	26 3/4	1028	616	530	245	152	249	345	442	3650
PB1-850-8-530	863.6	34.000	510	500	680	26 3/4	1070	645	530	245	217	339	460	582	7400
PB1-850-10-530	863.6	34.000	510	500	690	27 3/16	1092	685	530	255	319	533	746	960	13350
PB1-850-13-530	863.6	34.000	510	500	710	27 15/16	1170	740	530	275	545	912	1279	1646	28125
PB1-850-6-600	863.6	34.000	510	500	720	28 3/8	1058	645	600	285	221	348	474	601	3650
PB1-850-8-600	863.6	34.000	510	500	720	28 3/8	1100	660	600	285	292	464	636	808	7400
PB1-850-10-600	863.6	34.000	510	500	730	28 3/4	1120	675	600	295	366	586	807	1028	13350
PB1-850-13-600	863.6	34.000	510	500	750	29 1/2	1210	770	600	315	731	1221	1710	2200	28125
PB1-900-6-400	914.4	36.000	540	600	670	26 3/8	1130	701	400	210	175	285	395	505	3650
PB1-900-8-400	914.4	36.000	540	600	670	26 3/8	1142	710	400	210	205	343	482	621	7400
PB1-900-10-400	914.4	36.000	540	600	680	26 3/4	1180	785	400	220	356	599	841	1084	13350
PB1-900-13-400	914.4	36.000	540	600	690	27 3/16	1276	870	400	230	653	1064	1475	1886	28125
PB1-900-6-530	914.4	36.000	540	600	700	27 9/16	1088	736	530	240	187	300	413	526	3650
PB1-900-8-530	914.4	36.000	540	600	710	27 15/16	1130	745	530	250	244	388	532	676	7400

PB PIPE CLAMP BASE FOR USE AS A SLIDING BASE OR WITH TYPE 487 SPREADER BEAMS

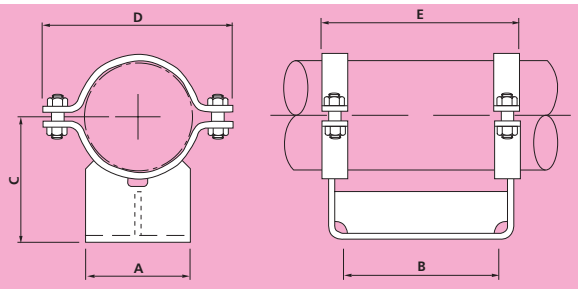

PB1

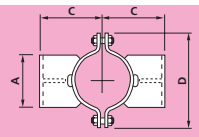

PB2

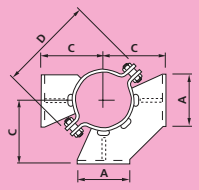

PB3

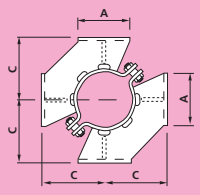

PB4

TYPE PB1 IS FOR USE AS A SLIDING BASE OR WITH SPREADER BEAMS. IF IT IS GUIDED AT THE BASE, THE LOAD CAPACITY IN THE HORIZONTAL DIRECTION IS 30% OF THE STATED VERTICAL LOAD CAPACITY.

TYPE PB2 IS FOR USE AS A GUIDE ON HORIZONTAL OR VERTICAL PIPES, OR WHEN USED WITH THE LEGS VERTICAL AS A VERTICAL RESTRAINT ON HORIZONTAL PIPES IN CASES WHERE THE VERTICAL LOAD CAN ACT UPWARDS.

TYPE PB3 IS FOR USE AS A GUIDE ON HORIZONTAL PIPES. THE STATED LOAD CAPACITY IS APPLICABLE TO BOTH VERTICAL AND LATERAL LOADINGS ACTING CONCURRENTLY.

TYPE PB4 IS A TWO WAY GUIDE WHICH CAN BE USED FOR EITHER HORIZONTAL OR VERTICAL PIPES.

ANY OF THE PIPE BASES CAN ALSO BE USED AS AXIAL RESTRAINTS IF SHEAR LUGS OR COLLARS ARE FITTED TO THE PIPE. THE LOAD CAPACITY IN THE DIRECTION OF THE PIPE AXIS IS LIMITED TO 30% OF THE LOAD CAPACITY IN THE VERTICAL DIRECTION.

Material: Carbon Steel to 400°C Alloy Steel above 400°C Base Plate Weldable Carbon Steel

Part No. (Type PB1)	Pipe O/D		A	B	C		D	E	Max. Temp.	Max Lagging Thick.	Weight				Load Capacity (See Notes)
For Multi-Leg types, replace PB1 with PB2, PB3 or PB4	mm	in	mm	mm	mm	in	mm	mm	C	mm	PB1 kgf	PB2 kgf	PB3 kgf	PB4 kgf	kgf
PB1-900-10-530	914.4	36.000	540	600	720	28 3/8	1172	765	530	260	366	616	866	1117	13350
PB1-900-13-530	914.4	36.000	540	600	730	28 3/4	1220	850	530	270	628	1052	1477	1902	28125
PB1-900-6-600	914.4	36.000	540	600	740	29 1/8	1108	745	600	280	247	395	543	690	3650
PB1-900-8-600	914.4	36.000	540	600	750	29 1/2	1150	760	600	290	328	530	732	934	7400
PB1-900-10-600	914.4	36.000	540	600	750	29 1/2	1170	775	600	290	409	665	921	1178	13350
PB1-900-13-600	914.4	36.000	540	600	780	30 11/16	1260	870	600	320	821	1389	1957	2525	28125
PB1-950-6-400	965.2	38.000	570	600	690	27 3/16	1180	701	400	205	185	302	419	535	3650
PB1-950-8-400	965.2	38.000	570	600	690	27 3/16	1202	735	400	205	244	391	539	686	7400
PB1-950-10-400	965.2	38.000	570	600	700	27 9/16	1230	785	400	215	377	634	892	1149	13350
PB1-950-13-400	965.2	38.000	570	600	720	28 3/8	1336	870	400	235	694	1135	1575	2015	28125
PB1-950-6-530	965.2	38.000	570	600	730	28 3/4	1138	736	530	245	199	320	441	563	3650
PB1-950-8-530	965.2	38.000	570	600	730	28 3/4	1180	745	530	245	258	411	564	717	7400
PB1-950-10-530	965.2	38.000	570	600	740	29 1/8	1222	765	530	255	387	653	919	1185	13350
PB1-950-13-530	965.2	38.000	570	600	760	29 15/16	1270	850	530	275	667	1121	1576	2030	28125
PB1-950-6-600	965.2	38.000	570	600	770	30 5/16	1158	745	600	285	263	421	579	737	3650
PB1-950-8-600	965.2	38.000	570	600	780	30 11/16	1200	760	600	295	349	565	781	997	7400
PB1-950-10-600	965.2	38.000	570	600	780	30 11/16	1220	775	600	295	434	709	983	1257	13350
PB1-950-13-600	965.2	38.000	570	600	810	31 7/8	1320	880	600	325	896	1503	2110	2717	28125
PB1-1000-6-400	1016	40.000	600	600	720	28 3/8	1230	701	400	210	197	321	446	571	3650
PB1-1000-8-400	1016	40.000	600	600	720	28 3/8	1252	735	400	210	258	416	574	732	7400
PB1-1000-10-400	1016	40.000	600	600	730	28 3/4	1280	785	400	220	400	675	950	1225	13350
PB1-1000-13-400	1016	40.000	600	600	740	29 1/8	1386	870	400	230	731	1198	1664	2130	28125
PB1-1000-6-530	1016	40.000	600	600	750	29 1/2	1188	736	530	240	210	338	467	595	3650
PB1-1000-8-530	1016	40.000	600	600	760	29 15/16	1230	745	530	250	274	437	600	764	7400
PB1-1000-10-530	1016	40.000	600	600	770	30 5/16	1272	765	530	260	410	694	978	1263	13350
PB1-1000-13-530	1016	40.000	600	600	780	30 11/16	1320	850	530	270	703	1184	1665	2147	28125
PB1-1000-6-600	1016	40.000	600	600	800	31 1/2	1208	755	600	290	289	458	627	796	3650
PB1-1000-8-600	1016	40.000	600	600	800	31 1/2	1250	770	600	290	381	610	839	1068	7400
PB1-1000-10-600	1016	40.000	600	600	810	31 7/8	1270	775	600	300	460	753	1046	1339	13350
PB1-1000-13-600	1016	40.000	600	600	830	32 11/16	1370	890	600	320	967	1610	2252	2895	28125

486 SPREADER BEAM

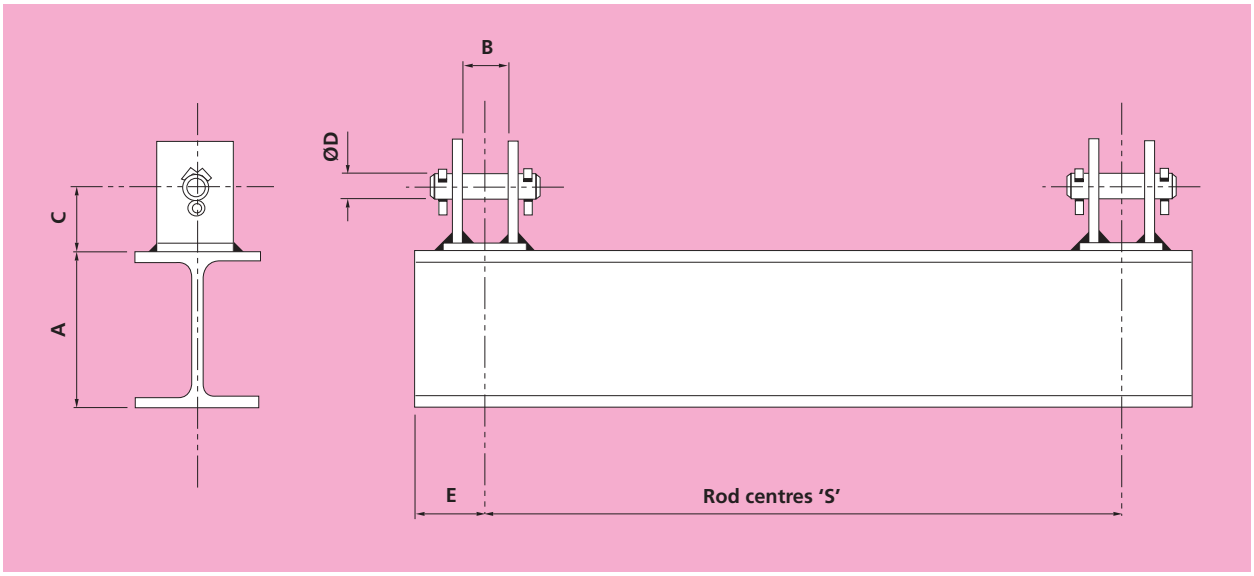

Material: Carbon Steel

Order by Part No., Beam Reference and Rod Centres "S"

PART No.	ROD DIA	LOAD CAPACITY		LOAD GROUP	B	C	D	E	WEIGHT EXCLUDING BEAM
		kg	kN		mm	mm	mm	mm	kg
F486M10	10	720	7.0	1	30	36	10	50	0.78
F486M12	12	1060	10.4	2	30	36	12	50	0.80
F486M16	16	2020	19.8	3	30	42	16	50	1.0
F486M20	20	3160	31.0	4	35	60	20	60	2.2
F486M24	24	4560	44.8	5	40	70	24	60	4.0
F486M30	30	7300	71.6	6	40	82	30	60	6.9
F486M36	36	10680	104.8	7	55	95	36	75	11.5
F486M42	42	14800	145.2	8	65	105	42	80	15.7
F486M48	48	19300	189.2	9	70	125	48	90	27.2
F486M56	56	26700	261.8	10	80	140	56	95	37.5
F486M64	64	36000	353.0	11	90	160	64	105	48.3
F486M72	72	46050	451.6	12	100	180	72	110	71.0

BEAM REFERENCE	DEPTH 'A' (NOM.) mm	WEIGHT PER METRE (NOM.) kgf
A	125	13.5
B	150	14.6
C	175	19.9
D	200	22.7
E	250	32.7
F	300	40.4
G	350	47.9
H	400	61.8
J	450	72.5
K	515	87.7
L	600	108.0

ORDER BY PART NUMBER AND ROD CENTRES 'S'

ROD DIA	LOAD CAPACITY		LOAD GROUP	BEAM REFERENCE FOR SPAN S = mm												
	kgf	kN		250	500	750	1000	1250	1500	1750	2000	2250	2500	2750	3000	
10	720	7.0	1							A		B			C	
12	1060	10.4	2						A	B			C		D	
16	2020	19.8	3				A	B		C	D				E	
20	3160	31.0	4			A	B	C	D				E		F	
24	4560	44.8	5			B	C	D			E			F	G	
30	7300	71.6	6				D		E		F			G	H	J
36	10680	104.8	7					E	F			G	H		J	K
42	14800	145.2	8							G	H		J			K	L
48	19300	189.2	9						G	H	J			K		L
56	26700	261.8	10							J	K				L	
64	36000	353.0	11							K		L				
72	46050	451.6	12								L					

487 SPREADER BEAM & 488 BATTENPLATE

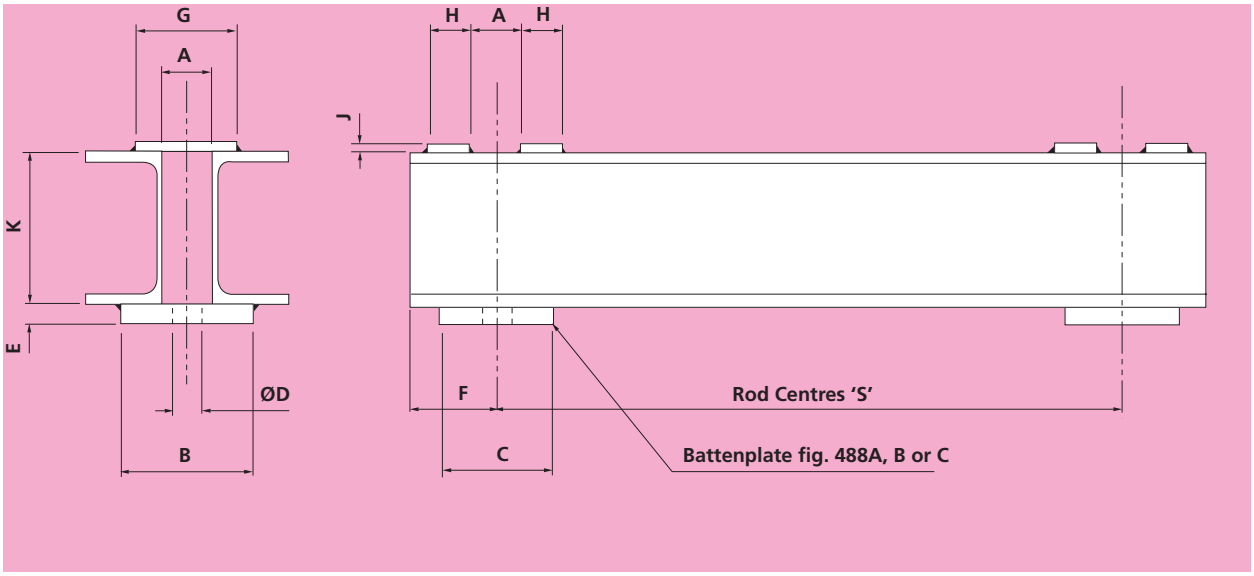

Material: Carbon Steel

Order by Part No., Beam Reference and Rod Centres "S"

PART No.	ROD DIA	LOAD CAPACITY		LOAD GROUP	Fig. 487A — PFC SPREADER BEAM FOR NO ROD ANGULATION									WEIGHT EXCLUDING CHANNELS
		kg	kN		A	B	C	D	E	F	G	H	J	kgf
F487AM10	10	720	7.0	1	14	60	40	12	6	35	60	20	6	0.5
F487AM12	12	1060	10.4	2	16	65	50	14	8	35	65	20	6	0.7
F487AM16	16	2020	19.8	3	20	85	60	18	10	40	85	20	6	1.1
F487AM20	20	3160	31.0	4	24	85	60	22	10	50	85	30	8	1.4
F487AM24	24	4560	44.8	5	28	85	85	26	12	65	85	40	8	2.2
F487AM30	30	7300	71.6	6	36	120	100	33	15	80	120	50	8	4.3
F487AM36	36	10680	104.8	7	42	150	100	39	20	85	150	50	10	7.1
F487AM42	42	14800	145.2	8	48	170	110	45	25	85	170	50	10	10.0
F487AM48	48	19300	189.2	9	54	180	130	51	25	100	180	60	12	13.3
F487AM56	56	26700	261.8	10	64	200	150	60	30	125	200	80	12	20.2
F487AM64	64	36000	353.0	11	72	200	180	68	35	150	200	100	15	29.2
F487AM72	72	46050	451.6	12	80	200	200	76	40	160	200	100	20	37.7

PART No.	ROD DIA	LOAD CAPACITY		LOAD GROUP	Fig. 487B — PFC SPREADER BEAM FOR USE WITH Fig. 236 SPHERICAL WASHERS AND FOR MAX 5 Deg. ROD ANGULATION									WEIGHT EXCLUDING CHANNELS
		kg	kN		A	B	C	D	E	F	G	H	J	kgf
F487BM10	10	720	7.0	1	38	90	60	16	10	55	90	30	6	1.4
F487BM12	12	1060	10.4	2	40	90	60	18	10	60	90	30	6	1.4
F487BM16	16	2020	19.8	3	48	100	80	22	12	70	100	40	6	2.3
F487BM20	20	3160	31.0	4	58	110	100	30	15	85	110	50	8	4.0
F487BM24	24	4560	44.8	5	68	120	100	33	20	95	120	50	8	5.3
F487BM30	30	7300	71.6	6	84	160	110	43	25	100	160	50	8	8.9
F487BM36	36	10680	104.8	7	98	200	150	48	30	135	200	75	10	18.8
F487BM42	42	14800	145.2	8	120	250	180	56	35	145	250	75	10	30.6
F487BM48	48	19300	189.2	9	135	260	200	64	40	180	260	100	12	42.5
F487BM56	56	26700	261.8	10	145	275	250	74	40	185	275	100	12	53.5
F487BM64	64	36000	353.0	11	155	300	250	84	50	195	300	100	15	73.0
F487BM72	72	46050	451.6	12	165	300	250	94	60	205	300	100	20	89.5

PART No.	ROD DIA	LOAD CAPACITY		LOAD GROUP	Fig. 487C — PFC SPREADER BEAM FOR USE WITH Fig. 281 DUAL FACED ROCKER WASHERS AND FOR MAX 5 Deg. ROD ANGULATION									WEIGHT EXCLUDING CHANNELS
		kg	kN		A	B	C	D	E	F	G	H	J	kgf
F487CM12	12	1060	10.4	2	40	90	90	38	10	60	90	30	6	1.8
F487CM16	16	2020	19.8	3	48	100	100	38	15	70	100	40	6	3.1
F487CM20	20	3160	31.0	4	58	110	110	49	20	85	110	50	8	5.2
F487CM24	24	4560	44.8	5	68	120	120	49	20	95	120	50	8	6.0
F487CM30	30	7300	71.6	6	84	160	160	66	25	100	160	50	8	12.1
F487CM36	36	10680	104.8	7	98	200	200	66	30	135	200	75	10	23.5
F487CM42	42	14800	145.2	8	120	250	250	74	35	145	250	75	10	40.2
F487CM48	48	19300	189.2	9	135	260	260	82	40	180	260	100	12	52.2
F487CM56	56	26700	261.8	10	145	275	275	93	50	185	275	100	12	69.7
F487CM64	64	36000	353.0	11	155	300	300	104	50	195	300	100	15	84.8

SPREADER BEAM ASSEMBLY INCLUDES TWO BATTENPLATES AS SHOWN
BATTENPLATES CAN ALSO BE ORDERED SEPARATELY

487 SPREADER BEAM & 488 BATTENPLATE

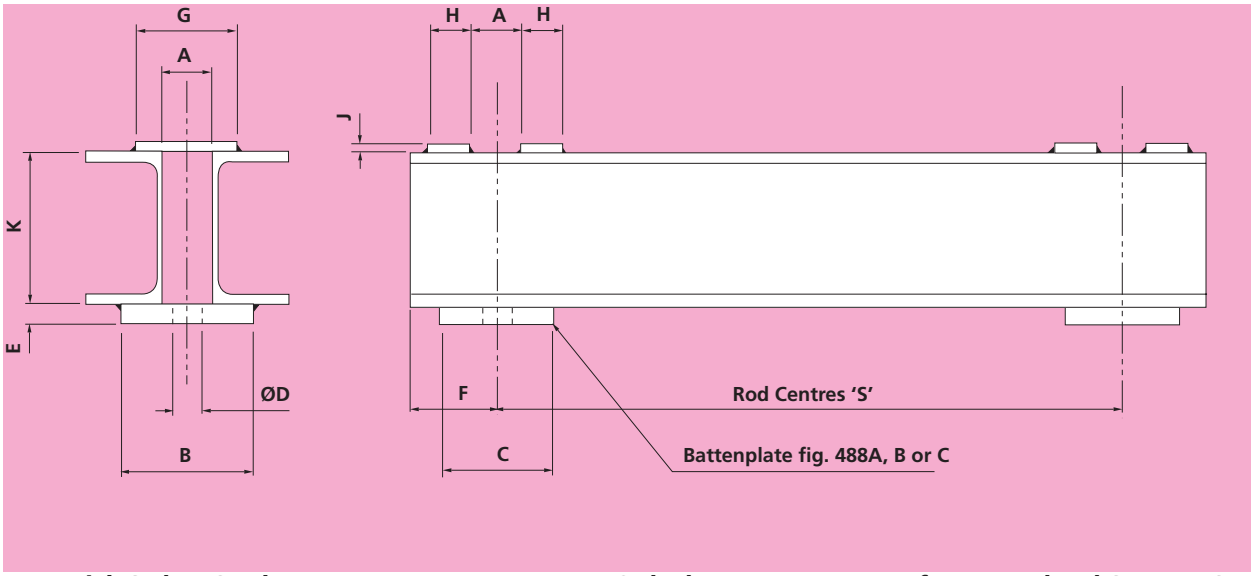

Material: Carbon Steel

Order by Part No., Beam Reference and Rod Centres "S"

BEAM REFERENCE	DEPTH K (NOM.) mm	WEIGHT PER METRE FOR TWO CHANNELS (NOM.) kgf
A	75	14.2
B	100	20.0
C	125	27.4
D	150	39.2
E	200	49.0
F	250	67.4
G	300	80.2
H	390	109.0
J	430	128.8

ROD DIA	LOAD CAPACITY kg	LOAD CAPACITY kN	LOAD GROUP	BEAM REFERENCE FOR SPAN S = mm (250 500 750 1000 1250 1500 1750 2000 2250 2500 2750 3000)
10	720	7.0	1	A B C
12	1060	10.4	2	A B C
16	2020	19.8	3	A B C D
20	3160	31.0	4	A B C D E
24	4560	44.8	5	A B C D E F
30	7300	71.6	6	B C D E F G
36	10680	104.8	7	C D E F G H
42	14800	145.2	8	E F G H J
48	19300	189.2	9	E F G H J
56	26700	261.8	10	F G H J
64	36000	353.0	11	G H J
72	46050	451.6	12	H J

Index

145 115A SLING ROD CAGE

116 BEAM CLAMP

146 117 BEAM CLAMP

147 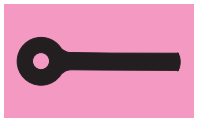 228 EYE RODS

148 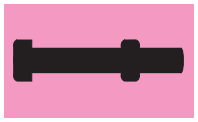 276 HEX HEAD BOLT

149 311 & 313 U-BOLTS

150 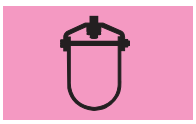 308 CLEVIS HANGER

314–322 WELDED OVERSTRAPS

154 342 OFFSET PIPE CLAMP

348 ADJUSTABLE PEDESTAL SUPPORT

156 347 & 383 HOLD DOWN CLAMPS

157 349 & 350 PIPE BASES

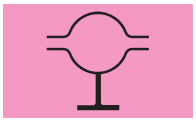 351 PIPE CLAMP BASE — LIGHT DUTY

158 353A & 353B TUBULAR BASES

354 SECTIONAL BASE

159 358 PIPE LUG ATTACHMENT

160 355A–F PIPE COVERING PROTECTION SADDLES

161 356 PIPE ROLLER

357 PIPE ROLLER AND ADJUSTABLE STAND

162 360 PIPE ROLLER AND STAND

361 PIPE ROLLER

163 362 ADJUSTABLE SUPPORT ROLLER CHAIR

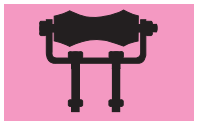 365 SUPPORT ROLLER CHAIR

164 371 U-STRAP (GRIP TYPE CS)

165 372 U-STRAP (GRIP TYPE SS)

166 373 U-STRAP (NON-GRIP TYPE CS)

167 374 U-STRAP (NON-GRIP TYPE SS)

168 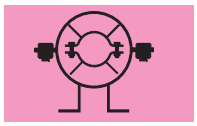 384 PIPE ALIGNMENT GUIDE

ADDITIONAL ANCILLARY ITEMS

This section covers other miscellaneous standard components that have not been designed on the load group basis as covered by Section 2.

SELECTION OF COMPONENTS

Selection of components is by reference to pipe size and load capacity.

For combined loading situations where load capacities are given in vertical, lateral and axial directions, the following formula should be applied:

$$\frac{P(v)}{LC(ax)} + \frac{P(lat)}{LC(v)} + \frac{P(ax)}{LC(lat)} \leq 1$$

Where P represents the actual applied load in the specified direction and LC is the quoted load capacity in the specified direction.

STANDARDS

This section includes items made to national and industry standards.

MATERIALS

Pipe Supports Group manufacturers at a number of sites worldwide. Materials are selected from the following equivalent or similar specifications suiting availability at the site of manufacture:

Carbon Steel Items manufactured from Plate or sections, Pipe Clamps to 400°C

IS	IS:2062
ASTM	ASTM A36
JIS	JIS G3101 SS400
Euro	BS EN10025: S275JR

Carbon Steel Hanger Rods

IS	IS: 2062
ASTM	ASTM A36
JIS	JIS G3101 SS400
Euro	BS EN10025: S275JR/S355JR

Carbon Steel for Forgings

IS	IS: 1875 Gr. 2
ASTM	ASTM A105
JIS	JIS G3202 SFVC2A
Euro	BS 970 Grade 080A27

Carbon Steel bolts and nuts

IS	IS: 1367 (Part III) Gr. 4.6 and IS: 1367 (Part VI) Gr. 4
ASTM	ASTM A307 Gr.B
Euro	BS 4190/DIN 601 Gr. 4.6 and BS 4190/DIN 555 Gr. 4

We also design and manufacture pipe clamps and ancillaries in other materials to suit particular applications. Examples of this are:

Hanger rods and ancillaries in alloy steel for boiler integral pipework.
Low temperature carbon steel grades.
Austenitic stainless steel for corrosion resistance, cryogenic or high temperature service.
Nickel alloys.

FINISH

The standard finish for pipe clamps and ancillary items is self colour. Other available finishes are:

Hot dip galvanised
Zinc plated
Zinc phosphate primer
Zinc silicate primer
Corrosion resistant paint finishes to customer specifications.

THREAD FORM

All threaded components are supplied ISO metric coarse unless otherwise stated. Other thread forms can be supplied at extra cost.

115A SLING ROD CAGE FOR UB

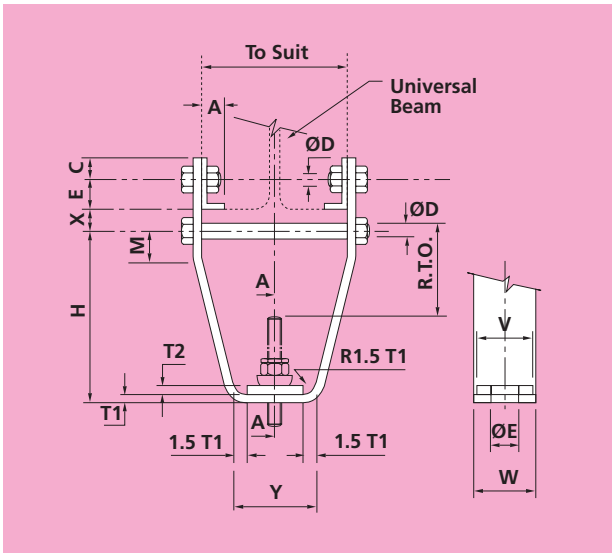

When used on wide beams, the depth (H) of the standard cage may be increased if necessary so that the inclination of the sides does not exceed 25° from the vertical.

A = 50mm for flange width 133mm or greater

A = 38mm for flange width less than 133mm

Material: Carbon Steel Order by Part No. & Beam Size

PART No.	SLING ROD DIA	W×T1	V×T2×Lg	SIZE OF ANGLE	L'TH OF ANGLE	C	E	M	H	Y	F	BOLT SIZE D	BOLT HOLE DIA	RTO	LOAD CAPACITY kgf	LOAD CAPACITY kN
F115AM08	8	35×8	25×8×26	A×30×5	35	10	20	20	165	50	12	8	9	108	230	2.3
F115AM10	10	35×8	25×8×26	A×40×6	35	15	25	20	170	50	16	10	11	110	360	3.5
F115AM12	12	45×8	35×8×31	A×50×8	45	20	30	25	170	55	18	12	14	106	530	5.2
F115AM16	16	45×10	35×10×40	A×65×8	45	30	35	30	180	70	22	16	18	106	1010	9.9
F115AM20	20	60×15	50×10×45	A×75×8	60	35	40	30	200	90	30	20	22	90	1580	15.5
F115AM24	24	80×15	70×10×50	A×100×12	80	45	55	40	210	95	33	24	26	94	2280	22.4
F115AM30	30	90×15	80×15×70	A×100×12	90	45	55	50	240	115	43	30	33	109	3650	35.8
F115AM36	36	100×20	90×20×80	A×125×12	100	60	65	65	275	140	48	36	39	124	5340	52.4
F115AM42	42	130×25	120×25×90	A×150×15	130	75	75	75	305	165	56	42	45	134	7400	72.6

116 BEAM CLAMP

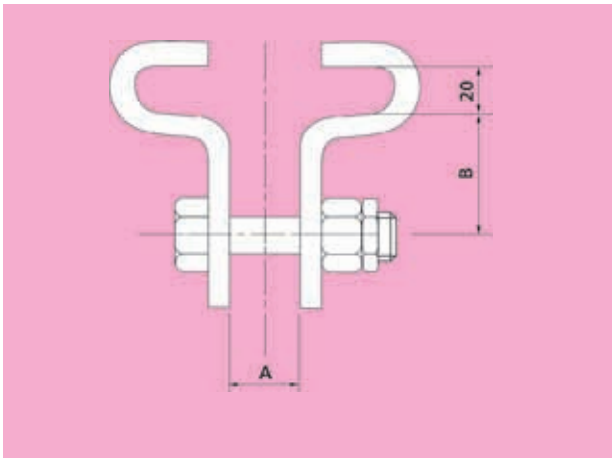

Material: Carbon Steel Order by Part No. & Beam Size

PART No.	FLANGE WIDTH	STEEL SIZE	A	B	BOLT SIZE	LOAD CAPACITY kgf	LOAD CAPACITY kN
F116-1	63-152	35×8	10	40	M10	360	3.5
	203 max.	40×10					
F116-2	63-152	40×10	12	40	M12	500	4.9
	203 max.	45×10					
F116-3	63-152	45×10	16	45	M16	650	6.4
	203 max.	60×10					
F116-4	63-178	55×12	20	55	M20	900	8.8
	254 max.	70×12					
F116-5	63-178	70×12	20	65	M20	1200	11.8
	254 max.	60×15					
F116-6	63-178	60×15	20	65	M20	1550	15.2
	254 max.	80×15					

117 BEAM CLAMP-HEAVY DUTY

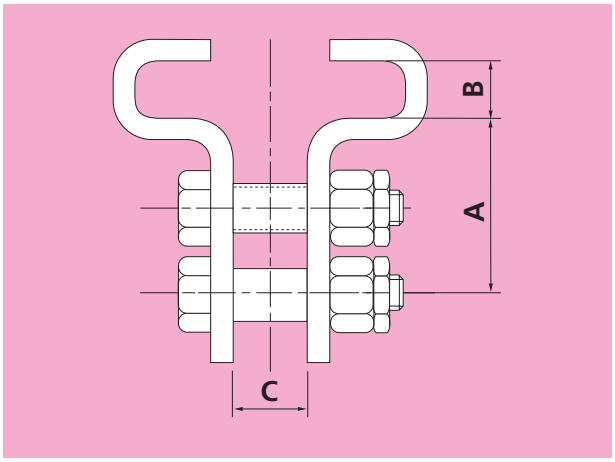

Material: Carbon Steel Order by Part No. & Beam Size

PART No.	FLANGE WIDTH	STEEL SIZE	A	B	C	BOLT SIZE	LOAD CAPACITY	
							kgf	kN
F117-1	102-178	60×10	95	25	19	M16	840	8.2
	254 max.	70×12						
F117-2	102-178	70×12	110	25	33	M20	1200	11.8
	254 max.	60×15						
F117-3	102-178	100×15	150	25	33	M30	2750	27.0
	254 max.	125×15						

228 FORGED EYEBOLT RIGHT HAND
228A FORGED EYEBOLT LEFT HAND

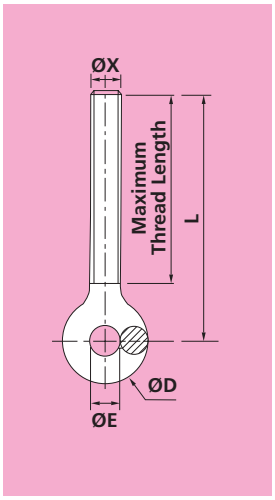

Material: Forged Steel

PART Nos.		DIA		MAX TREAD	MIN DIA	DIA	LOAD CAPACITY	
RH THREAD	LH THREAD	X	L	LENGTH	D	E	kgf	kN
F228M10	F228AM10	10	300	275	7	16	360	3.5
F228M12	F228AM12	12	300	270	9	18	530	5.2
F228M16	F228AM16	16	300	270	12	22	1010	9.9
F228M20	F228AM20	20	300	260	14	26	1580	15.5
F228M24	F228AM24	24	300	260	17	30	2280	22.4
F228M30	F228AM30	30	300	255	21	36	3650	35.8
F228M36	F228AM36	36	300	245	26	42	5340	52.4
F228M42	F228AM42	42	300	235	30	48	7400	72.6
F228M48	F228AM48	48	340	220	35	44	9650	94.6
F228M56	F228AM56	56	355	230	41	57	13350	130.9
F228M64	F228AM64	64	370	230	47	60	18000	176.5
F228M72	F228AM72	72	420	240	57	76	23025	225.8
F228M80	F228AM80	80	500	260	60	90	28125	275.8
F228M90	F228AM90	90	600	320	70	100	35595	349.1

Sizes M42 and above are oval eye pattern. Equivalent fabricated design is also available

276A BOLT C/W NUT
276B BOLT C/W NUT
276C SET SCREW C/W NUT

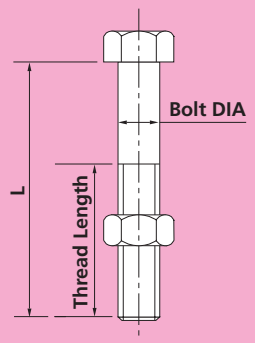

276A
Thread Length = $1^1/2D$

276B
Thread Length = 2D + 6 for L ≤ 125mm
= 2D + 12 for 125 < L ≤ 200
= 2D + 25 for L > 200

276C
Thread Length = L

Material: Carbon Steel. Other materials available

L	BOLT DIAMETER												
LENGTH	M6	M8	M10	M12	M16	M20	M24	M30	M36	M42	M48	M56	M64
16	C	C	C	C	—	—	—	—	—	—	—	—	—
20	BC	C	C	C	—	—	—	—	—	—	—	—	—
25	BC	BC	C	C	C	C	—	—	—	—	—	—	—
30	BC	BC	BC	BC	AC	C	—	—	—	—	—	—	—
35	BC	BC	BC	BC	AC	C	C	—	—	—	—	—	—
40	BC	BC	BC	BC	ABC	AC	C	C	—	—	—	—	—
45	BC	BC	BC	BC	ABC	AC	C	C	—	—	—	—	—
50	BC	BC	BC	BC	ABC	ABC	AC	C	C	—	—	—	—
55	BC	BC	BC	BC	ABC	ABC	AC	C	C	C	—	—	—
60	BC	BC	BC	BC	ABC	ABC	ABC	C	C	C	C	—	—
65	BC	BC	BC	BC	ABC	ABC	ABC	C	C	C	C	—	—
70	BC	BC	BC	BC	ABC	ABC	ABC	C	C	C	C	C	—
75	BC	BC	BC	BC	ABC	ABC	ABC	C	C	C	C	C	—
80	BC	BC	BC	BC	ABC	ABC	ABC	C	C	C	C	C	—
85	B	B	B	B	B	B	B	—	—	—	—	—	—
90	B	B	B	BC	ABC	ABC	ABC	BC	C	C	C	C	C
100	B	B	BC	BC	ABC	ABC	ABC	BC	BC	C	C	C	C
110	B	B	B	BC	BC	BC	BC	BC	BC	C	C	C	C
120	B	B	B	BC	BC	BC	BC	BC	BC	BC	C	C	C
130	B	B	B	BC	BC	BC	BC	BC	BC	BC	BC	C	C
140	B	B	B	BC	BC	BC	BC	BC	BC	BC	BC	C	C
150	B	B	B	BC	BC	BC	BC	BC	BC	BC	BC	C	C
160	—	—	—	BC	BC	BC	BC	BC	BC	BC	BC	BC	C
170	—	—	—	BC	BC	BC	BC	BC	BC	BC	BC	BC	BC
180	—	—	—	BC	BC	BC	BC	BC	BC	BC	BC	BC	BC
190	—	—	—	BC	BC	BC	BC	BC	BC	BC	BC	BC	BC
200	—	—	—	BC	BC	BC	BC	BC	BC	BC	BC	BC	BC
220	—	—	—	BC	BC	BC	BC	BC	BC	BC	BC	BC	BC
240	—	—	—	BC	BC	BC	BC	BC	BC	BC	BC	BC	BC
260	—	—	—	BC	BC	BC	BC	BC	BC	BC	BC	BC	BC
280	—	—	—	BC	BC	BC	BC	BC	BC	BC	BC	BC	BC
300	—	—	—	BC	BC	BC	BC	BC	BC	BC	BC	BC	BC

311 U BOLT GRIP TYPE -20°C to 350°C

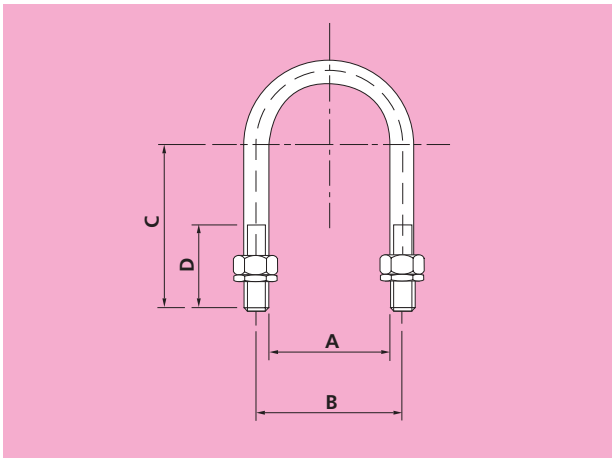

Material: Carbon Steel. Also available in Stainless Steel

PART No.	PIPE NB mm	PIPE NB in	Thread Size	A	B	C	D	Load capacities (kg) Vertical	Load capacities (kg) Lateral	Load capacities (kg) Axial
F311-10	10	3/8	8	19	27	34	23	460	210	100
F311-15	15	1/2	8	23	31	36	25	460	170	80
F311-20	20	3/4	8	29	37	43	25	460	140	70
F311-25	25	1	8	37	45	44	25	460	100	50
F311-32	32	1 1/4	8	47	55	50	25	460	80	40
F311-40	40	1 1/2	10	50	60	61	35	720	140	70
F311-50	50	2	10	65	75	65	35	720	110	60
F311-65	65	2 1/2	12	78	90	86	45	1060	160	80
F311-80	80	3	16	92	108	98	50	2020	330	170
F311-100	100	4	16	119	135	110	50	2020	250	120
F311-125	125	5	16	144	160	123	50	2020	210	100
F311-150	150	6	20	170	190	141	55	3160	340	170
F311-200	200	8	20	225	245	176	65	3160	260	130
F311-250	250	10	20	280	300	203	65	3160	210	100
F311-300	300	12	20	330	350	228	65	3160	170	90
F311-350	350	14	24	361	385	251	75	4560	280	140
F311-400	400	16	24	411	435	285	80	4560	240	120
F311-450	450	18	24	461	485	300	70	4560	220	110
F311-500	500	20	24	516	540	334	75	4560	190	100
F311-600	600	24	24	616	640	383	75	4560	160	80

313 U BOLT NON GRIP TYPE -20°C to 350°C

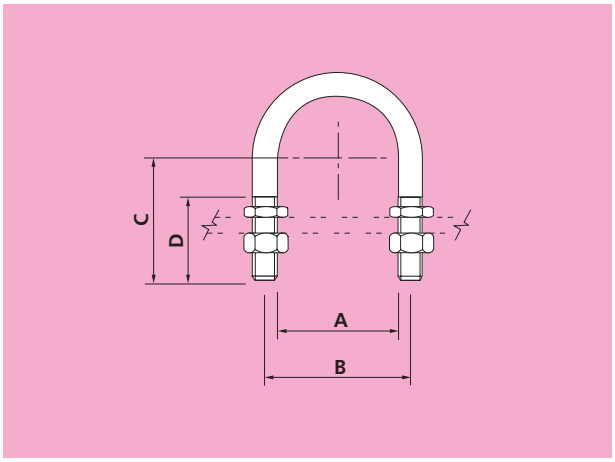

Material: Carbon Steel. Also available in Stainless Steel

PART No.	PIPE NB mm	PIPE NB in	Thread Size	A	B	C	D	Load Capacities (kg) Vertical	Load Capacities (kg) Lateral	Load Capacities (kg) Axial
F313-10	10	3/8	8	28	36	23	23	170	130	70
F313-15	15	1/2	8	32	40	25	25	150	120	60
F313-20	20	3/4	8	37	45	33	30	140	100	50
F313-25	25	1	8	42	50	35	30	130	90	40
F313-32	32	1 1/4	8	52	60	40	30	110	70	40
F313-40	40	1 1/2	10	55	65	53	40	190	130	70
F313-50	50	2	10	70	80	60	40	160	100	50
F313-65	65	2 1/2	12	83	95	73	50	230	150	80
F313-80	80	3	16	94	110	85	55	470	310	160
F313-100	100	4	16	124	140	95	55	380	240	120
F313-125	125	5	16	149	165	108	55	330	200	100
F313-150	150	6	20	175	195	128	65	540	330	160
F313-200	200	8	20	230	250	150	65	430	250	130
F313-250	250	10	20	285	305	183	75	350	200	100
F313-300	300	12	20	335	355	208	75	310	170	90
F313-350	350	14	24	366	390	230	80	480	270	140
F313-400	400	16	24	416	440	255	80	430	240	120
F313-450	450	18	24	471	495	278	80	380	210	110
F313-500	500	20	24	521	545	303	80	350	190	100
F313-600	600	24	24	621	645	353	80	300	160	80

NB: For Figure 311 & 313 the stated axial load capacity assumes the use of shear lugs on the pipe to transfer the force in to the u-bolt.

308 CLEVIS HANGER -20°C TO 100°C

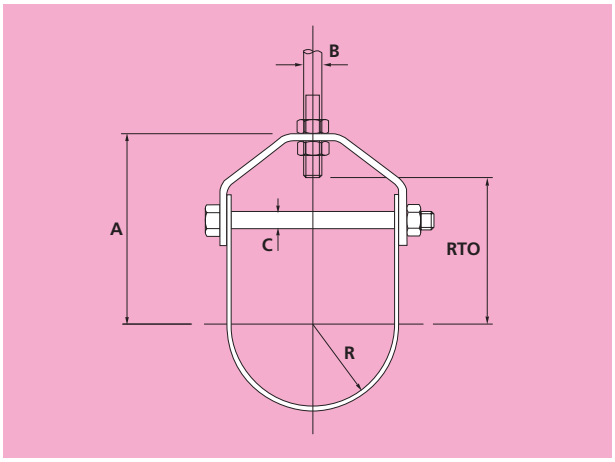

Material: Carbon Steel

PART No.	PIPE NB mm	PIPE NB in	A	B	C	R	RTO	TOP STEEL SIZE	BOTTOM STEEL SIZE
F308-15	15	1/2	60	M6	M6	11.0	39	25x3	25x3
F308-20	20	3/4	64	M6	M6	13.5	42	25x3	25x3
F308-25	25	1	65	M6	M6	17.0	45	25x3	25x3
F308-32	32	1 1/4	72	M10	M10	21.5	50	30x3	30x3
F308-40	40	1 1/2	76	M10	M10	24.5	54	30x3	30x3
F308-50	50	2	79	M10	M10	30.5	58	30x3	30x3
F308-65	65	2 1/2	105	M12	M12	38.0	74	40x5	40x3
F308-80	80	3	115	M12	M12	44.5	82	40x5	40x3
F308-100	100	4	140	M12	M12	57.5	101	40x5	40x3
F308-125	125	5	160	M16	M16	70.0	117	50x6	50x6
F308-150	150	6	183	M16	M16	86.0	137	50x6	50x6
F308-175	175	7	200	M20	M16	99.0	148	50x10	50x6
F308-200	200	8	215	M20	M16	112.0	162	50x10	50x6
F308-250	250	10	255	M20	M20	139.0	197	50x10	50x6
F308-300	300	12	283	M24	M20	165.0	221	50x12	50x10
F308-350	350	14	305	M24	M20	181.0	240	60x12	60x10
F308-400	400	16	336	M24	M24	206.0	270	60x12	60x10
F308-450	450	18	390	M24	M24	232.0	310	80x12	80x10
F308-500	500	20	440	M30	M24	258.0	344	80x15	80x12
F308-600	600	24	495	M30	M24	309.0	397	80x15	80x12
F308-750	750	30	610	M30	M42	385.0	499	80x20	80x12

314 WELDED OVERSTRAP TYPE 2A -20°C TO 350°C

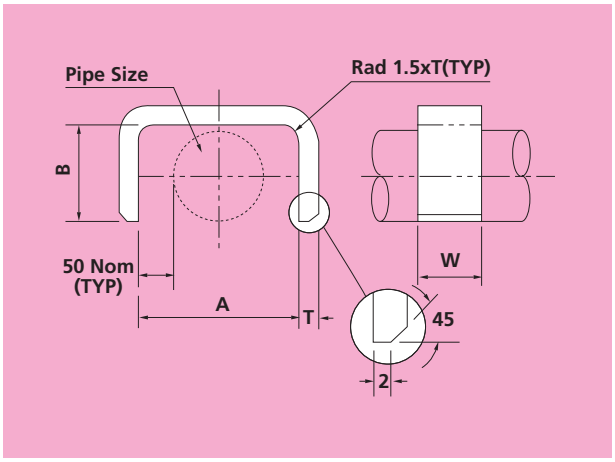

Material: Carbon Steel

PART No.	PIPE SIZE	A	B	W	T	LOAD CAPACITIES VERTICAL kgf	VERTICAL kN	AXIAL kgf	AXIAL kN
F314-20	20	127	30	50	8	405	4.0	895	8.8
F314-25	25	133	37	50	8	395	3.9	750	7.4
F314-32	32	142	46	50	8	380	3.7	620	6.1
F314-40	40	148	52	50	8	370	3.6	560	5.5
F314-50	50	160	64	75	12	1150	11.3	1525	15.0
F314-80	80	189	93	75	12	1020	10.0	1095	10.7
F314-100	100	214	118	100	12	1240	12.2	1345	13.2
F314-150	150	268	172	140	20	3900	38.2	3325	32.6

For combined vertical and axial loading, use the following formula:-

$$\frac{P_V}{SWL_V} + \frac{P_{AX}}{SWL_{AX}} \leq 1$$

Order by: Fig number and pipe size.

315 WELDED OVERSTRAP TYPE 2B -20°C TO 350°C

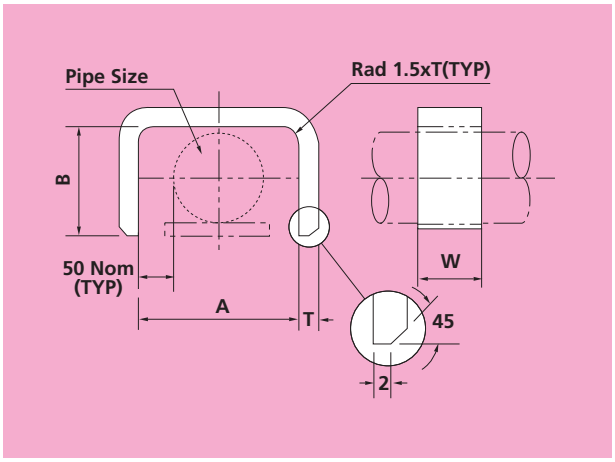

Material: Stainless Steel Grade 316

PART No.	PIPE SIZE	A	B	W	T	LOAD CAPACITIES VERTICAL kgf	VERTICAL kN	AXIAL kgf	AXIAL kN
F315-20	20	127	36	50	8	230	2.3	430	4.2
F315-25	25	133	43	50	8	225	2.2	370	3.6
F315-32	32	142	52	50	8	215	2.1	310	3.0
F315-40	40	148	58	50	8	210	2.1	285	2.8
F315-50	50	160	70	75	12	650	6.4	785	7.7
F315-80	80	189	99	75	12	575	5.6	575	5.6
F315-100	100	214	124	100	12	695	6.8	715	7.0
F315-150	150	268	268	140	20	2185	21.4	1790	17.6

For combined vertical and axial loading, use the following formula:-

$$\frac{P_V}{SWL_V} + \frac{P_{AX}}{SWL_{AX}} \leq 1$$

Order by: Fig number and pipe size.

316 WELDED OVERSTRAP TYPE 3A -20°C TO 350°C

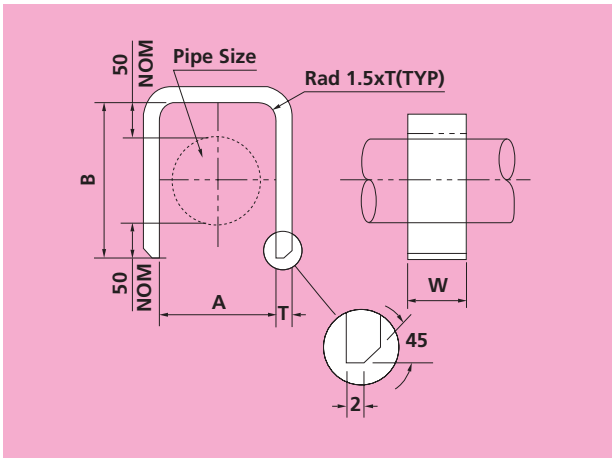

Material: Carbon Steel

PART No.	PIPE SIZE	A	B	W	T	LOAD CAPACITIES			
						AXIAL		TRANSVERSE	
						kgf	kN	kgf	kN
F316-20	20	30	127	50	8	600	5.9	160	1.6
F316-25	25	37	133	50	8	575	5.6	155	1.5
F316-32	32	46	142	50	8	535	5.2	145	1.4
F316-40	40	52	148	50	8	515	5.1	140	1.4
F316-50	50	64	160	75	12	1610	15.8	425	4.2
F316-80	80	93	189	75	12	1360	13.3	355	3.5
F316-100	100	118	214	100	12	2135	20.9	430	4.2
F316-150	150	172	268	140	20	5575	54.7	1295	12.7

For combined axial and transverse loading, use the following formula:-

$$\frac{P_{AX}}{SWL_{AX}} + \frac{P_{TR}}{SWL_{TR}} \leq 1$$

Order by: Fig. number and pipe size.

317 WELDED OVERSTRAP TYPE 3B -20°C TO 350°C

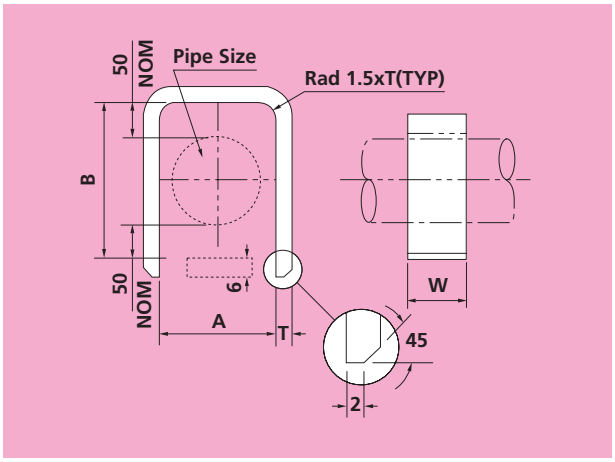

Material: Stainless Steel Grade 316

PART No.	PIPE SIZE	A	B	W	T	LOAD CAPACITIES			
						AXIAL		TRANSVERSE	
						kgf	kN	kgf	kN
F317-20	20	30	133	50	8	320	3.1	85	0.80
F317-25	25	37	139	50	8	305	3.0	80	0.80
F317-32	32	46	148	50	8	285	2.8	75	0.70
F317-40	40	52	154	50	8	275	2.7	75	0.70
F317-50	50	64	166	75	12	860	8.4	225	2.2
F317-80	80	93	195	75	12	735	7.2	195	1.9
F317-100	100	118	220	100	12	1155	11.3	230	2.3
F317-150	150	172	274	140	20	3030	29.7	705	6.9

For combined axial and transverse loading, use the following formula:-

$$\frac{P_{AX}}{SWL_{AX}} + \frac{P_{TR}}{SWL_{TR}} \leq 1$$

Order by: Fig. number and pipe size.

318 WELDED OVERSTRAP TYPE 4 -20°C TO 350°C

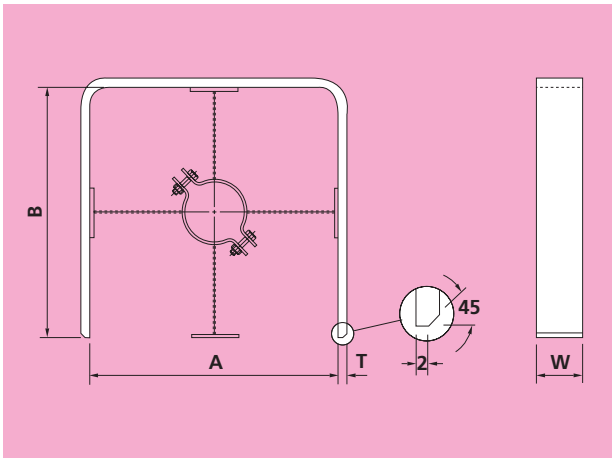

For combined vertical and transverse loading, use the following formula:-

$$\frac{P_V}{SWL_V} + \frac{P_{TR}}{SWL_{TR}} \leq 1$$

Order by: Fig. number and pipe size.

Material: Carbon Steel

PART Nos.		PIPE	TWO SIZES AVAILABLE		W	T	LOAD CAPACITIES SIZE 1				LOAD CAPACITIES LOAD SIZE 2			
SIZE 1	SIZE 2	SIZE	SIZE 1	SIZE 2			VERTICAL		TRANSVERSE		VERTICAL		TRANSVERSE	
			A&B	A&B			kgf	kN	kgf	kN	kgf	kN	kgf	kN
F318-1-20	F318-2-20	20	129	229	75	15	2415	23.7	760	7.5	1470	14.4	440	4.3
F318-1-25	F318-2-25	25	135	235	75	15	2325	22.8	725	7.1	1435	14.1	425	4.2
F318-1-32	F318-2-32	32	144	244	75	15	2200	21.6	685	6.7	1385	13.6	410	4.0
F318-1-40	F318-2-40	40	150	250	75	15	2125	20.8	660	6.5	1355	13.3	405	4.0
F318-1-50	F318-2-50	50	162	262	75	15	1990	19.5	610	6	1990	19.5	610	6.0
F318-1-65	F318-2-65	65	175	275	90	20	3805	37.3	1180	11.6	2580	25.3	770	7.6
F318-1-80	F318-2-80	80	192	292	90	20	3520	34.5	1080	10.6	2445	24.0	725	7.1

319 WELDED OVERSTRAP TYPE 5 -20°C TO 350°C

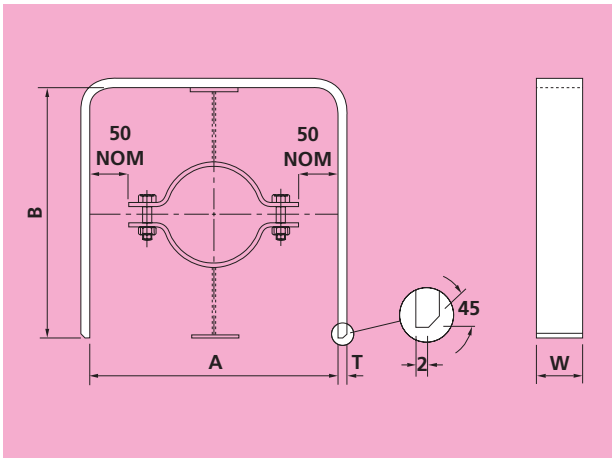

Order by: Fig. number and pipe size.

Material: Carbon Steel

PART Nos.		PIPE		TWO SIZES AVAILABLE				LOAD CAPACITY			
SIZE 1	SIZE 2	SIZE	A	SIZE 1	SIZE 2	W	T	VERTICAL SIZE 1		VERTICAL SIZE 2	
				B	B			kgf	kN	kgf	kN
F319-1-20	F319-2-20	20	229	129	229	75	15	1350	13.2	1470	14.4
F319-1-25	F319-2-25	25	235	135	235	75	15	1350	12.9	1435	14.1
F319-1-32	F319-2-32	32	244	144	244	75	15	1285	12.6	1385	13.6
F319-1-40	F319-2-40	40	250	150	250	75	15	1260	12.4	1355	13.3
F319-1-50	F319-2-50	50	262	162	262	75	15	1215	11.9	1300	12.7
F319-1-65	F319-2-65	65	275	175	275	90	20	2445	24.0	2580	25.3
F319-1-80	F319-2-80	80	292	192	292	90	20	2330	22.8	2445	24.0

320 WELDED OVERSTRAP TYPE 6 -20°C TO 350°C

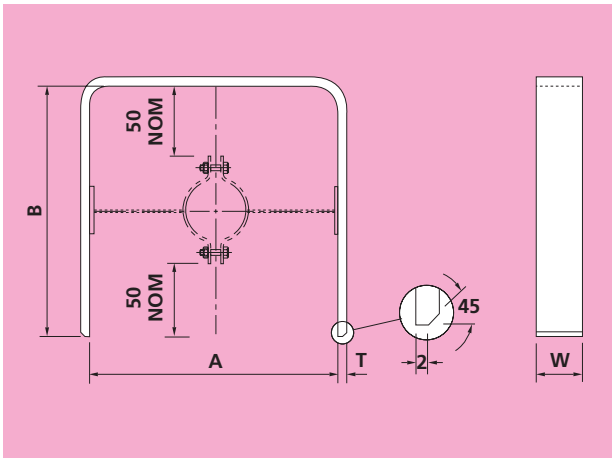

Order by: Fig. number and pipe size.

Material: Carbon Steel

PART Nos.		PIPE	TWO SIZES AVAILABLE					LOAD CAPACITY			
SIZE 1	SIZE 2	SIZE	SIZE 1	SIZE 2				TRANSVERSE SIZE 1		TRANSVERSE SIZE 2	
			A	A	B	W	T	kgf	kN	kgf	kN
F320-1-20	F320-2-20	20	129	229	229	75	15	450	4.4	440	4.3
F320-1-25	F320-2-25	25	135	235	235	75	15	435	4.3	25	4.2
F320-1-32	F320-2-32	32	144	244	244	75	15	420	4.1	410	4.0
F320-1-40	F320-2-40	40	150	250	250	75	15	410	4.0	405	4.0
F320-1-50	F320-2-50	50	162	262	262	75	15	395	3.9	385	3.8
F320-1-65	F320-2-65	65	175	275	275	90	20	780	7.6	770	7.6
F320-1-80	F320-2-80	80	192	292	292	90	20	735	7.2	725	7.1

321 WELDED OVERSTRAP TYPE 1A

-20°C TO 350°C

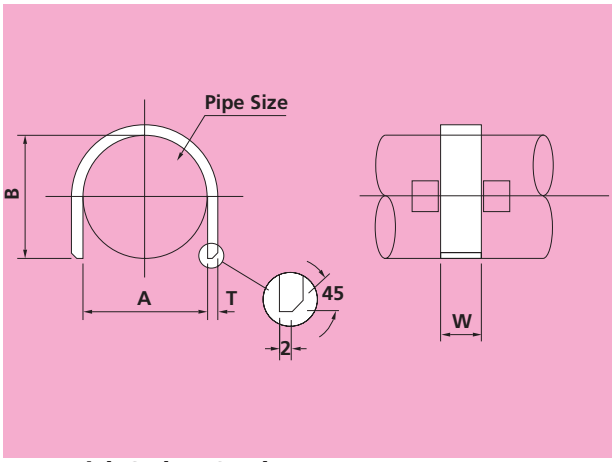

Material: Carbon Steel

PART No.	PIPE SIZE	A	B	W	T	LOAD CAPACITY					
						VERTICAL		AXIAL		TRANSVERSE	
						kgf	kN	kgf	kN	kgf	kN
F321-20	20	30	30	50	8	1615	15.8	2125	20.8	585	5.7
F321-25	25	37	37	50	8	1390	13.6	2060	20.2	485	4.8
F321-32	32	46	46	50	8	1185	11.6	1655	16.2	400	3.9
F321-40	40	52	52	50	8	1075	10.5	1465	14.4	355	3.5
F321-50	50	64	64	75	12	2820	27.7	4020	39.4	965	9.5
F321-80	80	93	93	75	12	2105	20.6	2765	27.1	680	6.7
F321-100	100	118	118	100	20	5800	56.9	6460	63.4	1915	18.8
F321-150	150	172	172	140	25	9005	88.3	10860	106.5	2940	28.8

For combined vertical, axial and transverse loading, use the following formula:-

$$\frac{P_V}{SWL_V} + \frac{P_{AX}}{SWL_{AX}} + \frac{P_{TR}}{SWL_{TR}} \leq 1$$

Order by: Fig. number and pipe size.

322 WELDED OVERSTRAP TYPE 1B

-20°C TO 350°C

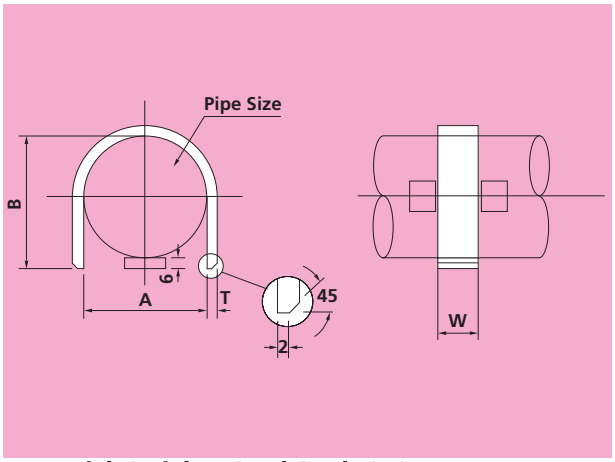

Material: Stainless Steel Grade 316

PART No.	PIPE SIZE	A	B	W	T	LOAD CAPACITY					
						VERTICAL		AXIAL		TRANSVERSE	
						kgf	kN	kgf	kN	kgf	kN
F322-20	20	30	36	50	8	800	7.8	1175	11.5	280	2.7
F322-25	25	37	43	50	8	700	6.9	985	9.7	240	2.4
F322-32	32	46	52	50	8	605	5.9	815	8.0	200	2.0
F322-40	40	52	58	50	8	555	5.4	730	7.2	180	1.8
F322-50	50	64	70	75	12	1475	14.5	2040	20.0	495	4.9
F322-80	80	93	99	75	12	1115	10.9	1445	14.2	360	3.5
F322-100	100	118	124	100	20	115	30.5	3415	33.5	1020	10.0
F322-150	150	172	178	140	25	4880	47.9	5830	57.2	1585	15.5

For combined vertical, axial and transverse loading, use the following formula:-

$$\frac{P_V}{SWL_V} + \frac{P_{AX}}{SWL_{AX}} + \frac{P_{TR}}{SWL_{TR}} \leq 1$$

Order by: Fig. number and pipe size.

342 OFFSET PIPE CLAMP -20°C TO 350°C

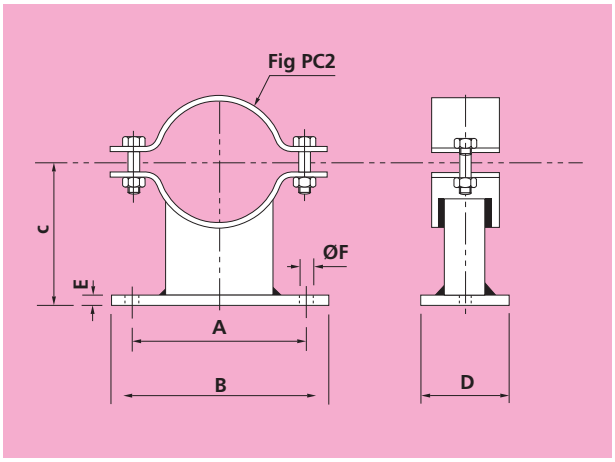

PART No.	PIPE SIZE	A	B	C	D	E	F	LOAD CAPACITY kgf	LOAD CAPACITY kN
F342-15	15	60	100	55	35	5	12	280	2.7
F342-20	20	70	110	55	35	5	12	280	2.7
F342-25	25	70	110	60	35	5	12	280	2.7
F342-32	32	80	120	70	35	8	14	280	2.7
F342-40	40	90	130	80	35	8	14	280	2.7
F342-50	50	100	140	85	35	8	14	280	2.7
F342-65	65	110	160	90	45	10	18	450	4.4
F342-80	80	120	170	95	45	10	18	450	4.4
F342-100	100	140	190	110	45	10	18	450	4.4
F342-125	125	160	210	120	45	10	18	450	4.4
F342-150	150	180	230	135	45	10	18	450	4.4
F342-200	200	220	270	160	60	10	18	520	5.1

Material: Carbon Steel

348 ADJUSTABLE PEDESTAL SUPPORT -20°C TO 350°C

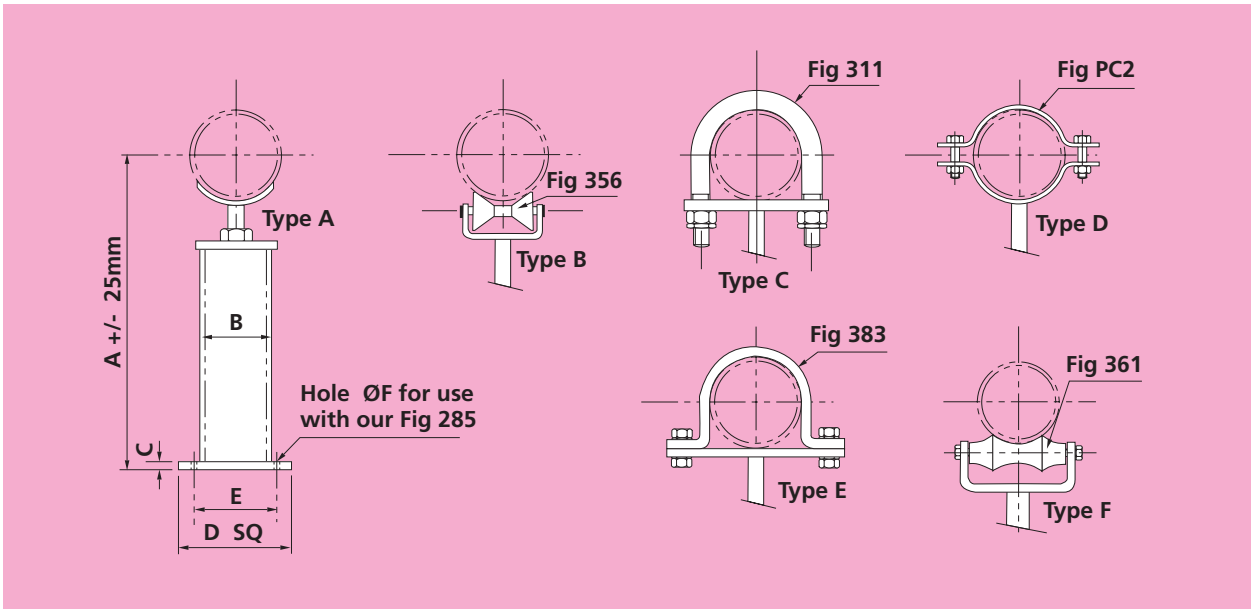

Material: Carbon Steel Order by Part No., Type, Pipe Size & Height 'A'

PART No.	B	C	D	E	ØF	Recommended Type 285 Fixing Bolt	LOAD CAPACITY (kg) AT HEIGHT A = 500	1000	1500	2000	2500	3000
F348-1	60.3	10	170	130	15	M10	490	250	160	120	90	70
F348-2	76.1	12	200	150	18	M12	800	410	270	200	150	130
F348-3	88.9	15	240	190	18	M12	1110	570	380	280	220	180
F348-4	114.3	20	280	220	24	M16	2050	1070	720	540	420	350
F348-5	139.7	20	400	320	28	M20	4110	2170	1470	1110	880	730
F348-6	168.3	25	440	360	32	M24	5930	3180	2170	1640	1310	1090
F348-7	219.1	25	660	580	32	M24	9850	5380	3700	2810	2260	1890

347 HOLD DOWN PIPE CLAMP
383 ANCHOR HOLD DOWN CLAMP

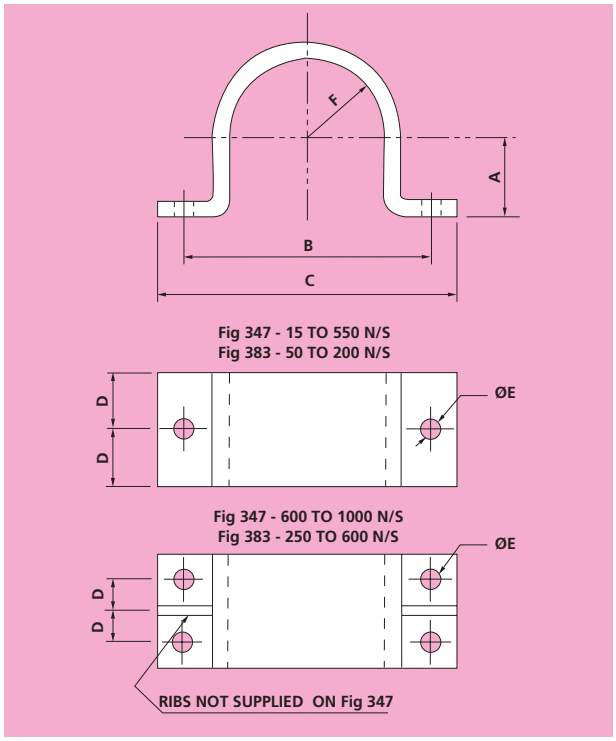

Material: Carbon Steel

PART No.	PIPE SIZE	PIPE O/D	A	B	C	D	ØE	F	STEEL SIZE
F347-15	15	21.3	10	70	110	17.5	12	11.5	35×5
F347-20	20	26.9	13	80	120	17.5	12	14	35×5
F347-25	25	33.7	16	90	130	17.5	12	18	35×5
F347-32	32	42.4	20	110	140	17.5	15	22	35×8
F347-40	40	48.3	23	120	160	17.5	15	25	35×8
F347-50	50	60.3	29	130	170	17.5	15	31	35×8
F347-65	65	76.1	36	160	210	22.5	19	40	45×10
F347-80	80	88.9	43	180	230	22.5	19	46	45×10
F347-100	100	114.3	55	210	260	22.5	19	59	45×10
F347-125	125	139.7	68	240	300	30.0	24	72	60×10
F347-150	150	168.3	82	270	330	30.0	24	86	60×10
F347-175	175	193.7	95	310	370	27.5	24	99	55×15
F347-200	200	219.1	107	340	400	27.5	24	112	55×15
F347-225	225	244.5	122	360	420	27.5	24	124	55×15
F347-250	250	273.0	135	390	450	27.5	24	138	55×15
F347-300	300	323.9	162	440	500	27.5	24	164	55×15
F347-350	350	355.6	172	480	540	27.5	24	180	55×15
F347-400	400	406.4	202	530	600	30.0	28	205	60×15
F347-450	450	457.0	228	590	660	30.0	28	231	60×15
F347-500	500	508.0	258	640	710	30.0	28	256	60×15
F347-550	550	559.0	278	690	760	30.0	28	282	60×15
F347-600	600	610	305	730	790	30.0	24	308	100×15
F347-650	650	660	328	780	840	30.0	24	333	100×15
F347-700	700	711	355	830	890	30.0	24	358	100×15
F347-750	750	762	380	890	950	30.0	24	385	100×15
F347-800	800	813	405	970	1040	33.0	28	410	110×20
F347-850	850	864	430	1020	1090	33.0	28	435	110×20
F347-900	900	914	455	1070	1140	33.0	28	460	110×20
F347-1000	1000	1016	507	1170	1240	33.0	28	511	110×20

PART No.	PIPE SIZE	PIPE O/D	A	B	C	D	ØE	F	STEEL SIZE
F383-50	50	60.3	27	150	210	40	22	31	80×10
F383-65	65	76.1	34	170	230	40	22	40	80×10
F383-80	80	88.9	40	180	240	40	22	46	80×10
F383-100	100	114.3	53	210	270	40	22	59	80×10
F383-125	125	139.7	65	240	300	40	22	72	80×10
F383-150	150	168.3	80	280	350	75	27	86	150×12
F383-200	200	219.1	105	330	400	75	27	112	150×12
F383-250	250	273.0	131	390	460	65	27	139	200×12
F383-300	300	323.9	156	440	510	65	27	165	200×12
F383-350	350	355.6	172	470	540	75	27	181	250×12
F383-400	400	406.4	198	520	590	75	27	206	250×12
F383-450	450	457.0	222	570	640	90	27	232	300×12
F383-500	500	508.0	247	620	690	90	27	258	300×12
F383-600	600	610	298	730	800	90	27	309	300×12

349 PIPE BASE LIGHT DUTY MAX. 150 N.B.

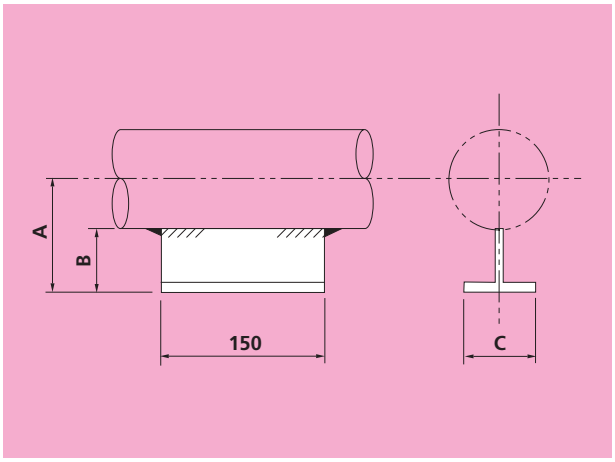

PART No.	PIPE N.B.	A	B	C	LOAD CAPACITY kgf	LOAD CAPACITY kN
F349-20	20	76	62	76	150	1.5
F349-25	25	79	62	76	150	1.5
F349-32	32	83	62	76	150	1.5
F349-40	40	86	62	76	150	1.5
F349-50	50	92	62	76	150	1.5
F349-65	65	100	62	76	150	1.5
F349-80	80	106	62	76	150	1.5
F349-100	100	132	75	89	150	1.5
F349-125	125	170	100	102	150	1.5
F349-150	150	184	100	102	150	1.5

Material: Carbon Steel

350 PIPE BASE HEAVY DUTY

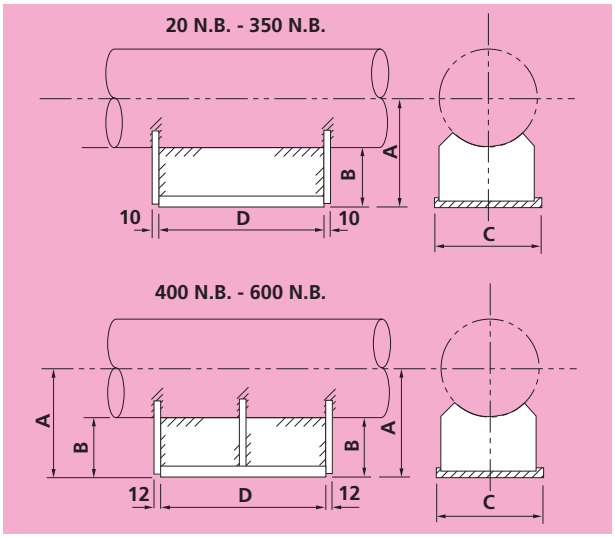

Material: Carbon Steel

PART No.	PIPE N.B.	A	B	C	D	LOAD CAPACITY kgf	LOAD CAPACITY kN
F350-20	20	76	62	76	150	1200	11.8
F350-25	25	79	62	76	150	1200	11.8
F350-32	32	83	62	76	150	1200	11.8
F350-40	40	86	62	76	150	1200	11.8
F350-50	50	92	62	76	150	1200	11.8
F350-65	65	100	62	76	150	1200	11.8
F350-80	80	106	62	76	150	1200	11.8
F350-100	100	132	75	89	150	1200	11.8
F350-125	125	170	100	102	150	1200	11.8
F350-150	150	184	100	102	150	1200	11.8
F350-175	175	197	100	203	200	2000	19.6
F350-200	200	210	100	203	200	2000	19.6
F350-225	225	222	100	203	200	2000	19.6
F350-250	250	237	100	203	200	2000	19.6
F350-300	300	262	100	203	200	4000	39.2
F350-350	350	278	100	203	200	4000	39.2
F350-400	400	304	100	203	300	9000	88.3
F350-450	450	329	100	203	300	12000	117.7
F350-500	500	354	100	203	300	12000	117.7
F350-550	550	380	100	203	300	12000	117.7
F350-600	600	405	100	203	300	14000	137.3

351 PIPE CLAMP BASE LIGHT DUTY MAX. 150 N.B.

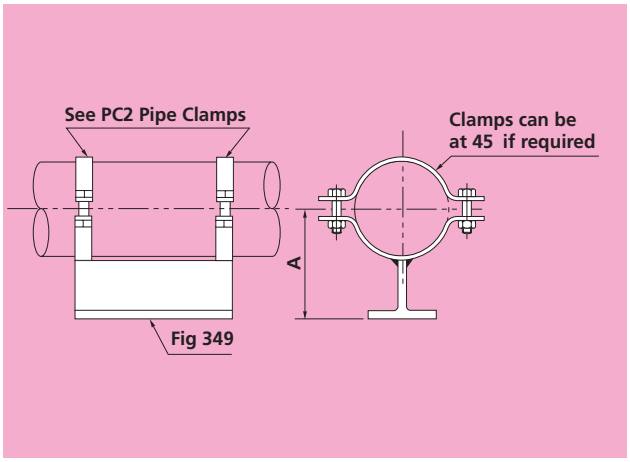

PART No.	PIPE N.B.	A	LOAD CAPACITY kgf	LOAD CAPACITY kN
F351-20	20	81	150	1.5
F351-25	25	85	150	1.5
F351-32	32	89	150	1.5
F351-40	40	92	150	1.5
F351-50	50	98	150	1.5
F351-65	65	107	150	1.5
F351-80	80	113	150	1.5
F351-100	100	139	150	1.5
F351-125	125	177	150	1.5
F351-150	150	191	150	1.5

Material: Carbon Steel

353A TUBULAR BASE

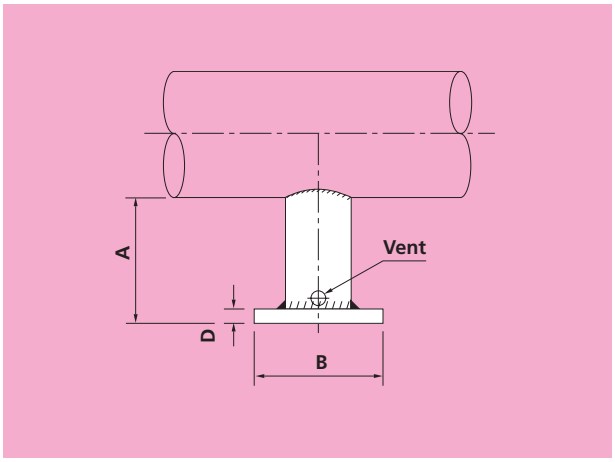

353B TUBULAR BASE

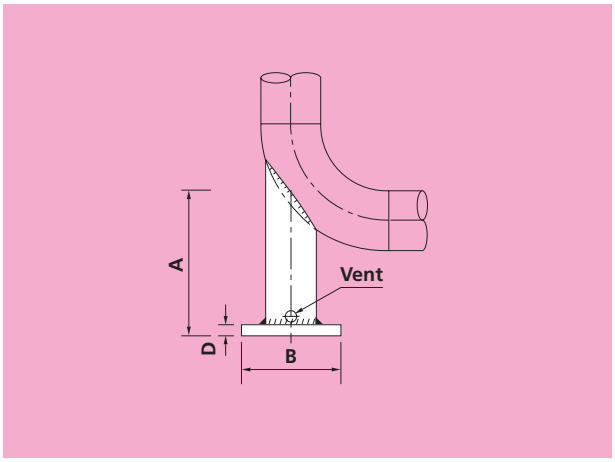

354 SECTIONAL BASE

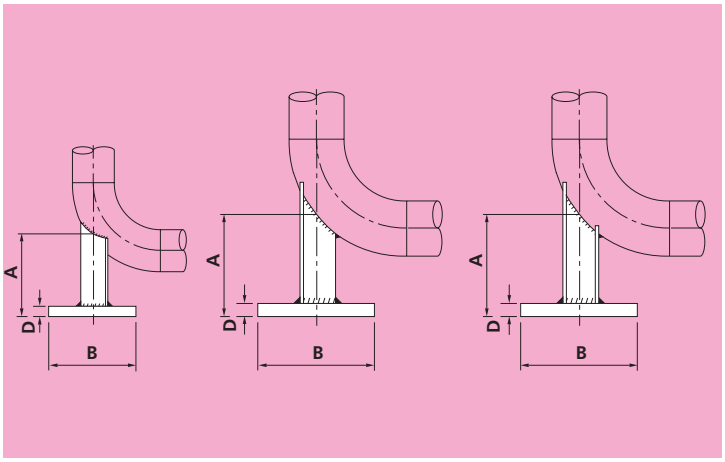

353A, 353B and 354:

These components are designed to suit the application.

When specifying these items, the designer should satisfy himself that stress levels in the pipe wall are acceptable.

Material must be compatible with the pipe.

358 PIPE LUG ATTACHMENT

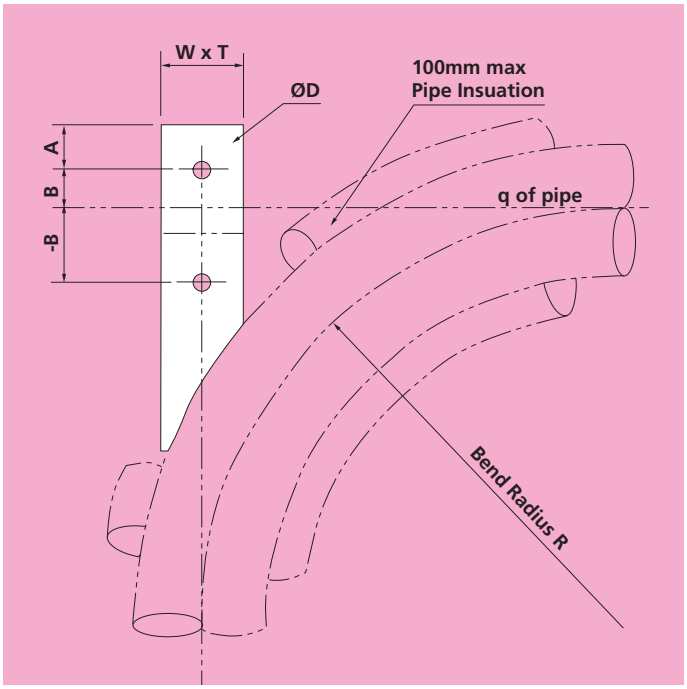

Quoted load capacities refer to the lug itself and not to the interface with the pipe.

The designer should satisfy himself that stress levels in the pipe wall are acceptable.

Material must be compatible with the pipe.

Order by Part No. and Bend Radius R.

PART No.	PIPE SIZE	WxT	A	ØD	R=1.5D B	R=3D B	R=5D B	LOAD CAPACITY kgf	LOAD CAPACITY kM
F358-50	50	50x8	25	14	137	101	40	530	5.2
F358-65	65	60x10	35	18	137	89	7	1010	9.9
F358-80	80	60x10	35	18	137	77	-22	1010	9.9
F358-100	100	60x10	35	18	137	53	-82	1010	9.9
F358-125	125	60x10	35	18	135	28	-143	1010	9.9
F358-150	150	60x10	35	18	133	0	-214	1010	9.9
F358-175	175	60x10	40	22	146	-10	-256	1580	15.5
F358-200	200	60x10	40	22	143	-37	-320	1580	15.5
F358-225	225	60x10	40	22	141	-65	-385	1580	15.5
F358-250	250	60x10	40	22	137	-96	-459	1580	15.5
F358-300	300	60x12	50	26	139	-144	-580	2280	22.4
F358-350	350	100x15	60	33	134	-180	-663	3650	35.8
F358-400	400	100x15	60	33	198	-237	-797	3650	35.8
F358-450	450	100x20	75	39	119	-285	-917	5340	52.4
F358-500	500	100x20	75	39	120	-344	-1053	5340	52.4
F358-550	550	100x20	75	39	112	-403	-1188	5340	52.4
F358-600	600	110x25	85	45	113	-452	-1311	7400	72.6

PIPE COVERING PROTECTION SADDLES

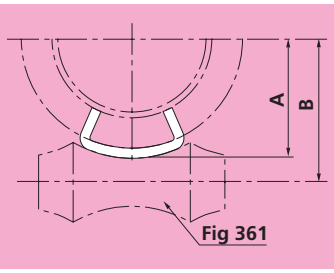

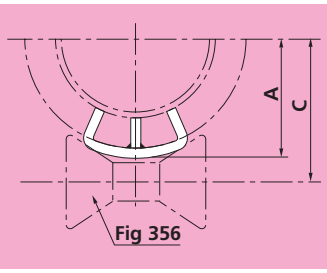

Material: Carbon Steel. Other materials available

355A FOR 25mm NOMINAL INSULATION

PART No.	PIPE SIZE	A	B	C	INSULATION THICKNESS	USE WITH FIG.361 ROLLER SIZE	USE WITH FIG.356 ROLLER SIZE	LOAD CAPACITY	
								kgf	kN
F355A-20	20	41	52	59	24	65	50-80	300	2.9
F355A-25	25	49	59	67	29	80	50-80	318	3.1
F355A-32	32	49	59	67	24	80	50-80	318	3.1
F355A-40	40	56	71	73	29	100	50-80	340	3.3
F355A-50	50	59	76	78	29	100	50-80	340	3.3
F355A-65	65	67	83	84	29	125	100-150	425	4.2
F355A-80	80	75	91	91	29	125	100-150	425	4.2
F355A-100	100	87	106	106	29	150	100-150	485	4.8
F355A-125	125	102	121	121	29	200	100-150	600	5.9
F355A-150	150	114	133	145	25	200	200-250	950	9.3
F355A-200	200	141	164	168	29	250	200-250	950	9.3

355B FOR 40mm NOMINAL INSULATION

PART No.	PIPE SIZE	A	B	C	INSULATION THICKNESS	USE WITH FIG.361 ROLLER SIZE	USE WITH FIG.356 ROLLER SIZE	LOAD CAPACITY	
								kgf	kN
F355B-20	20	57	73	75	38	100	50-80	340	3.3
F355B-25	25	59	76	78	41	100	50-80	340	3.3
F355B-32	32	59	83	85	43	125	50-80	340	3.3
F355B-40	40	70	85	89	40	125	100-150	425	4.2
F355B-50	50	75	91	94	41	125	100-150	425	4.2
F355B-65	65	87	103	106	48	150	100-150	485	4.8
F355B-80	80	87	105	106	40	150	100-150	485	4.8
F355B-100	100	100	119	127	40	200	200-250	950	9.3
F355B-125	125	114	133	141	40	200	200-250	950	9.3
F355B-150	150	125	151	154	38	250	200-250	950	9.3
F355B-200	200	154	183	181	40	300	200-250	1088	10.7
F355B-250	250	183	219	211	41	350	300-350	1400	13.7
F355B-300	300	208	240	237	41	400	300-350	1800	17.7
F355B-350	350	221	256	252	38	450	400-500	2250	22.1
F355B-400	400	246	288	278	38	500	400-500	2250	22.1
F355B-450	450	271	319	303	38	600	600	2800	27.5
F355B-500	500	297	345	329	38	600	600	2800	27.5
F355B-600	600	348	405	387	38	750	750	3400	33.3

355C FOR 50mm NOMINAL INSULATION

PART No.	PIPE SIZE	A	B	C	INSULATION THICKNESS	USE WITH FIG.361 ROLLER SIZE	USE WITH FIG.356 ROLLER SIZE	LOAD CAPACITY	
								kgf	kN
F355C-20	20	70	85	89	51	125	50-80	340	3.3
F355C-25	25	73	89	92	54	125	50-80	340	3.3
F355C-32	32	78	94	97	49	125	50-80	340	3.3
F355C-40	40	87	105	108	59	150	100-150	485	4.8
F355C-50	50	92	110	110	54	150	100-150	485	4.8
F355C-65	65	98	116	117	59	150	100-150	485	4.8
F355C-80	80	100	119	121	52	200	100-150	600	5.9
F355C-100	100	113	132	140	52	200	200-250	950	9.3
F355C-125	125	127	146	154	52	200	200-250	950	9.3
F355C-150	150	141	165	168	52	250	200-250	950	9.3
F355C-200	200	167	195	197	52	300	200-250	1088	10.7
F355C-250	250	195	229	224	54	400	300-350	1800	17.7
F355C-300	300	221	230	252	54	450	400-500	2250	22.1
F355C-350	350	233	268	265	51	450	400-500	2250	22.1
F355C-400	400	259	302	291	51	500	400-500	2250	22.1
F355C-450	450	284	332	316	51	600	600	2800	27.5
F355C-500	500	310	357	241	51	600	600	2800	27.5
F355C-600	600	360	421	400	51	750	700	3400	33.3

PIPE COVERING PROTECTION SADDLES

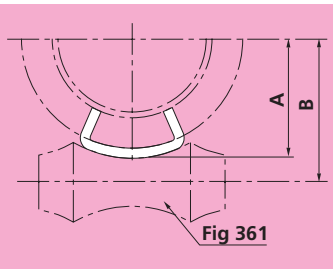

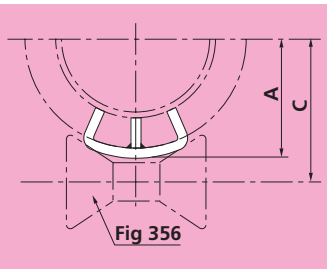

Material: Carbon Steel. Other materials available

355D FOR 65mm NOMINAL INSULATION

PART No.	PIPE SIZE	A	B	C	INSULATION THICKNESS	USE WITH FIG.361 ROLLER SIZE	USE WITH FIG.356 ROLLER SIZE	LOAD CAPACITY	
								kgf	kN
F355D-40	40	100	119	119	73	200	100-150	600	5.9
F355D-50	50	105	124	124	67	200	100-150	600	5.9
F355D-65	65	110	133	133	73	200	100-150	600	5.9
F355D-80	80	117	141	141	65	200	100-150	600	5.9
F355D-100	100	125	149	154	65	250	200-250	950	9.3
F355D-125	125	140	164	168	65	250	200-250	950	9.3
F355D-150	150	154	184	186	65	300	200-250	1088	10.7
F355D-200	200	183	219	211	68	350	300-350	1400	13.7
F355D-250	250	208	241	237	67	400	300-350	1800	17.7
F355D-300	300	233	265	262	67	450	400-500	2250	22.1
F355D-350	350	246	295	284	64	500	400-500	2250	22.1
F355D-400	400	271	321	310	64	500	400-500	2250	22.1
F355D-450	450	297	351	335	64	600	600	2800	27.5
F355D-500	500	322	376	360	64	600	600	2800	27.5
F355D-600	600	373	437	419	64	750	750	3400	33.3

355E FOR 80mm NOMINAL INSULATION

PART No.	PIPE SIZE	A	B	C	INSULATION THICKNESS	USE WITH FIG.361 ROLLER SIZE	USE WITH FIG.356 ROLLER SIZE	LOAD CAPACITY	
								kgf	kN
F355E-50	50	117	141	146	79	250	200-250	950	9.3
F355E-65	65	124	148	152	84	250	200-250	950	9.3
F355E-80	80	125	146	151	78	250	200-250	950	9.3
F355E-100	100	140	164	168	79	250	200-250	950	9.3
F355E-125	125	154	178	183	78	250	200-250	950	9.3
F355E-150	150	167	192	194	78	300	300-350	1350	13.2
F355E-200	200	194	230	222	79	350	300-350	1400	13.7
F355E-250	250	221	254	252	79	400	400-500	2250	22.1
F355E-300	300	246	281	278	79	450	400-500	2250	22.1
F355E-350	350	259	302	291	76	500	400-500	2250	22.1
F355E-400	400	284	332	316	76	600	600	2800	27.5
F355E-450	450	310	357	341	76	600	600	2800	27.5
F355E-500	500	335	392	375	76	750	750	3400	33.3
F355E-600	600	386	443	425	76	750	750	3400	33.3

355F FOR 100mm NOMINAL INSULATION

PART No.	PIPE SIZE	A	B	C	INSULATION THICKNESS	USE WITH FIG.361 ROLLER SIZE	USE WITH FIG.356 ROLLER SIZE	LOAD CAPACITY	
								kgf	kN
F355F-100	100	167	194	189	105	300	200-250	1088	10.7
F355F-125	125	181	218	225	108	350	300-350	1400	13.7
F355F-150	150	195	232	221	105	350	300-350	1400	13.7
F355F-200	200	221	256	252	106	450	400-500	2250	22.1
F355F-250	250	246	288	278	105	500	400-500	2250	22.1
F355F-300	300	271	313	303	105	500	400-500	2250	22.1
F355F-350	350	284	332	316	102	600	600	2800	27.5
F355F-400	400	310	357	641	102	600	600	2800	27.5
F355F-450	450	335	383	367	102	600	600	2800	27.5
F355F-500	500	360	418	400	102	750	750	3400	33.3
F355F-600	600	411	463	451	102	750	750	3400	33.3

356 PIPE ROLLER — SHORT PATTERN

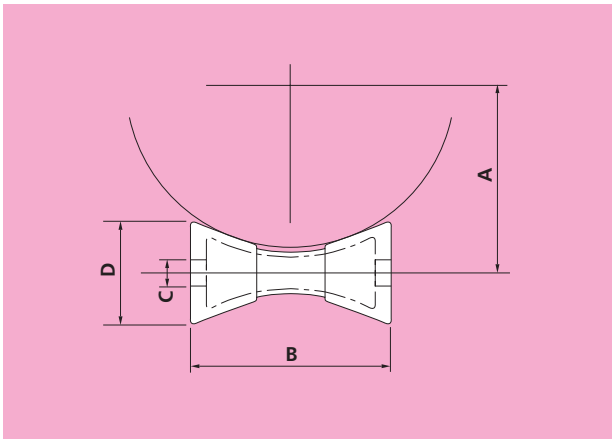

PART No.	PIPE SIZE	A	B	C	D	LOAD CAPACITY kgf	LOAD CAPACITY kN
F356-50	50	46	70	14	48	175	1.7
F356-65	65	52	70	14	48	175	1.7
F356-80	80	62	70	14	48	175	1.7
F356-100	100	71	95	14	54	425	4.2
F356-125	125	87	95	14	54	425	4.2
F356-150	150	102	95	14	54	425	4.2
F356-200	200	133	150	22	83	950	9.3
F356-250	250	162	150	22	83	950	9.3
F356-300	300	190	200	26	102	1350	13.2
F356-350	350	206	200	26	102	1350	13.2
F356-400	400	235	232	32	114	2250	22.1
F356-450	450	263	232	32	114	2250	22.1
F356-500	500	292	232	32	114	2250	22.1
F356-600	600	350	254	38	114	2750	27.0
F356-750	750	438	318	44	140	3400	33.3
F356-900	900	514	375	50	162	5400	53.0
F356-1050	1050	590	375	50	162	5400	53.0
F356-1200	1200	667	375	50	162	5400	53.0

Material: Cast Iron

357 PIPE ROLLER AND ADJUSTABLE STAND

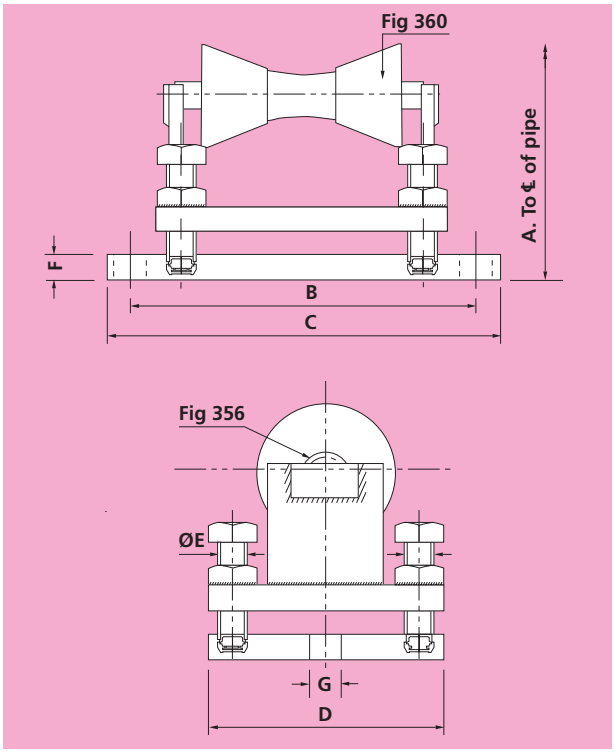

Material: Cast Iron and Carbon Steel

PART No.	PIPE SIZE	A MIN	A MAX	B	C	D	E	F	G	LOAD CAPACITY kgf	LOAD CAPACITY kN
F357-50	50	110	150	150	198	110	16	15	18	175	1.7
F357-65	65	116	156	150	198	110	16	15	18	175	1.7
F357-80	80	126	166	150	198	110	16	15	18	175	1.7
F357-100	100	153	133	190	250	120	16	20	21	425	4.2
F357-125	125	169	209	190	250	120	16	20	21	425	4.2
F357-150	150	184	224	190	250	120	16	20	21	425	4.2
F357-200	200	229	269	250	310	155	20	20	21	950	9.3
F357-250	250	258	298	250	310	155	20	20	21	950	9.3
F357-300	300	301	341	320	392	195	24	25	26	1350	13.2
F357-350	350	317	357	320	392	195	24	25	26	1350	13.2
F357-400	400	353	393	365	437	237	24	25	26	2250	22.1
F357-450	450	381	421	365	437	237	24	25	26	2250	22.1
F357-500	500	410	450	365	437	237	24	25	26	2250	22.1
F357-600	600	473	513	390	462	237	24	25	26	2750	27.0
F357-750	750	585	625	470	542	290	30	30	26	3400	33.3
F357-900	900	686	726	540	612	315	36	40	26	5400	53.0
F357-1050	1050	762	802	540	612	315	36	40	26	5400	53.0
F357-1200	1200	839	879	540	612	315	36	40	26	5400	53.0

360 PIPE ROLLER AND STAND

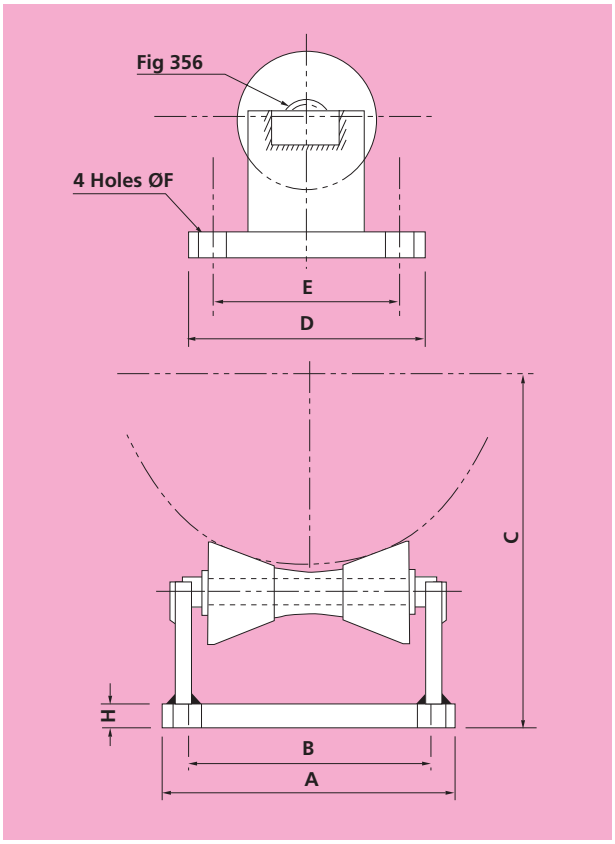

PART No.	PIPE SIZE	A	B	C	D	E	F	H	LOAD CAPACITY kgf	LOAD CAPACITY kN
F360-50	50	115	85	95	110	80	12	15	175	1.7
F360-65	65	115	85	101	110	80	12	15	175	1.7
F360-80	80	115	85	111	110	80	12	15	175	1.7
F360-100	100	150	120	133	120	90	12	20	425	4.2
F360-125	125	150	120	149	120	90	12	20	425	4.2
F360-150	150	150	120	164	120	90	12	20	425	4.2
F360-200	200	210	174	209	155	115	14	20	950	9.3
F360-250	250	210	174	238	155	115	14	20	950	9.3
F360-300	300	275	215	276	195	135	22	25	1350	13.3
F360-350	350	275	215	292	195	135	22	25	1350	13.3
F360-400	400	320	248	328	237	165	27	25	2250	22.1
F360-450	450	320	248	356	237	165	27	25	2250	22.1
F360-500	500	320	248	385	237	165	27	25	2250	22.1
F360-600	600	345	273	448	237	165	27	25	2750	27.0
F360-750	750	425	335	555	290	200	33	30	3400	33.3
F360-900	900	495	405	646	315	225	33	40	5400	53.0
F360-1050	1050	495	405	722	315	225	33	40	5400	53.0
F360-1200	1200	495	405	799	315	225	33	40	5400	53.0

Material: Cast Iron and Carbon Steel

361 PIPE ROLLER

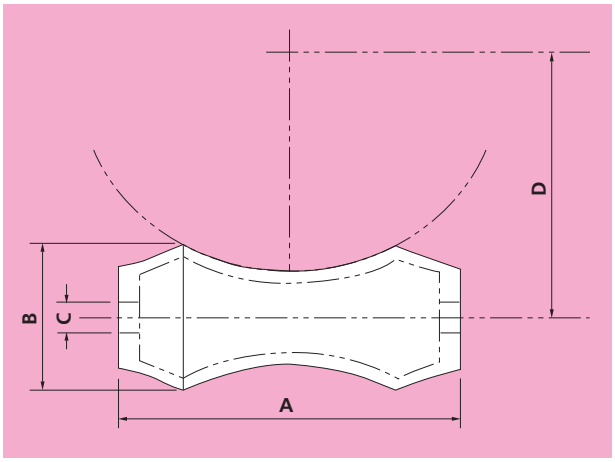

PART No.	PIPE SIZE	A	B	C	D	LOAD CAPACITY kgf	LOAD CAPACITY kN
F361-25	25	25	20	12	27	275	2.7
F361-32	32	37	21	12	32	275	2.7
F361-40	40	40	22	12	35	275	2.7
F361-50	50	44	24	12	41	275	2.7
F361-65	65	60	29	14	49	300	2.9
F361-80	80	94	35	14	57	318	3.1
F361-100	100	94	35	14	71	340	3.3
F361-125	125	146	49	20	87	340	3.3
F361-150	150	146	49	20	103	485	4.7
F361-200	200	228	69	24	130	600	5.9
F361-250	250	280	85	27	159	785	7.7
F361-300	300	330	100	27	189	1088	10.7
F361-350	350	361	120	27	213	1400	13.7
F361-400	400	412	130	27	240	1800	17.6
F361-450	450	463	138	27	267	1900	18.6
F361-500	500	514	152	33	295	2000	19.6
F361-600	600	615	183	33	365	2800	27.5
F361-750	750	770	219	50	443	3300	32.4
F361-900	900	914	251	66	521	5000	49.0

Material: Cast Iron

362 ADJUSTABLE SUPPORT ROLLER CHAIR

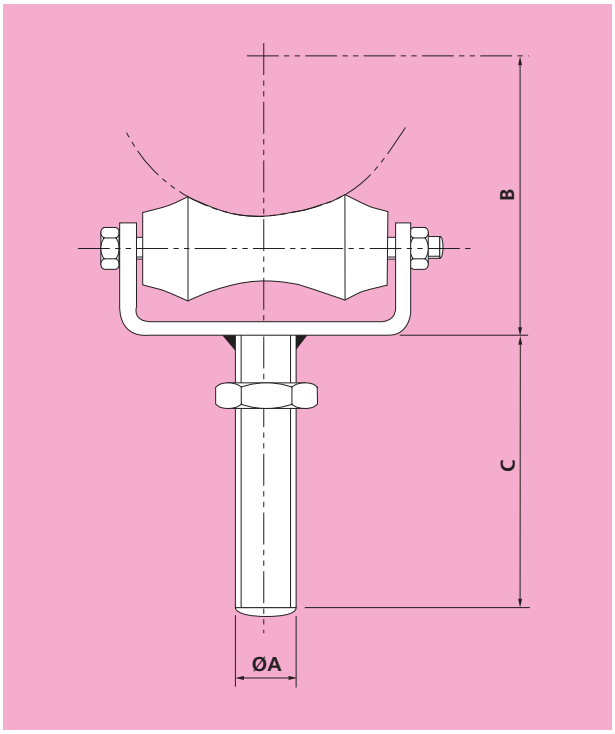

PART No.	PIPE SIZE	A	B	C	STEEL SIZE	SWL kgf	SWL kN
F362-25	25	12	59	150	25x5	275	2.7
F362-32	32	12	67	150	25x5	275	2.7
F362-40	40	12	70	150	25x5	275	2.7
F362-50	50	12	78	150	30x6	275	2.7
F362-65	65	12	90	150	30x6	300	2.9
F362-80	80	12	100	150	40x6	318	3.1
F362-100	100	16	125	150	40x6	340	3.3
F362-125	125	16	145	150	50x10	340	3.3
F362-150	150	20	165	150	50x10	485	4.7
F362-200	200	20	200	150	50x12	600	5.9
F362-250	250	24	240	150	65x12	785	7.7
F362-300	300	24	280	150	65x12	1088	10.7
F362-350	350	30	310	150	80x12	1400	13.7
F362-400	400	30	343	150	80x12	1800	17.6
F362-450	450	30	370	150	80x12	1900	18.6
F362-500	500	36	410	150	100x12	2000	19.6
F362-600	600	36	500	150	100x16	2800	27.5

Material: Cast Iron and Carbon Steel

365 SUPPORT ROLLER CHAIR

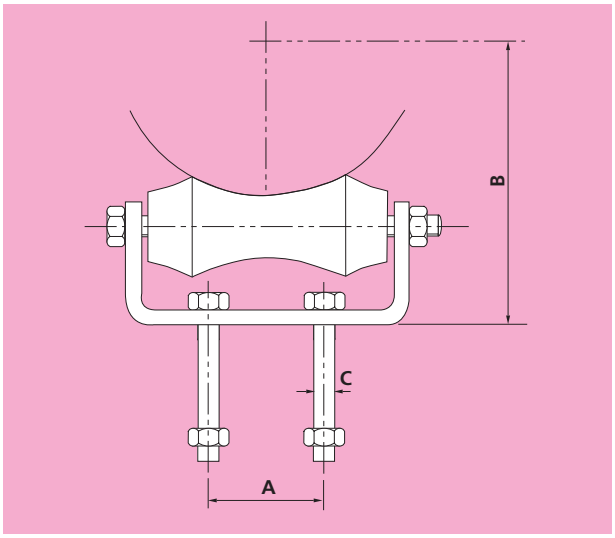

PART No.	PIPE SIZE	A	B	BOLT SIZE C	STEEL SIZE	SWL kgf	SWL kN
F365-25	25	1 hole	59	M10x30	25x5	275	2.7
F365-32	32	1 hole	67	M10x30	25x5	275	2.7
F365-40	40	1 hole	70	M10x30	25x5	275	2.7
F365-50	50	30	78	M10x30	30x6	275	2.7
F365-65	65	30	90	M10x30	40x6	300	2.9
F365-80	80	50	100	M10x30	40x6	318	3.1
F365-100	100	50	125	M10x30	40x10	340	3.3
F365-125	125	80	145	M12x40	50x10	340	3.3
F365-150	150	80	165	M12x40	50x10	485	4.7
F365-200	200	85	200	M16x40	50x12	600	5.9
F365-250	250	135	240	M16x45	65x12	785	7.7
F365-300	300	140	280	M16x45	65x12	1088	10.7
F365-350	350	165	310	M20x50	80x12	1400	13.7
F365-400	400	210	340	M20x70	80x12	1800	17.6
F365-450	450	235	370	M20x70	80x12	1900	18.6
F365-500	500	260	410	M20x70	80x12	2000	19.6
F365-600	600	310	500	M20x90	100x16	2800	27.5

Material: Cast Iron and Carbon Steel

371 U-STRAP (GRIP TYPE CS)

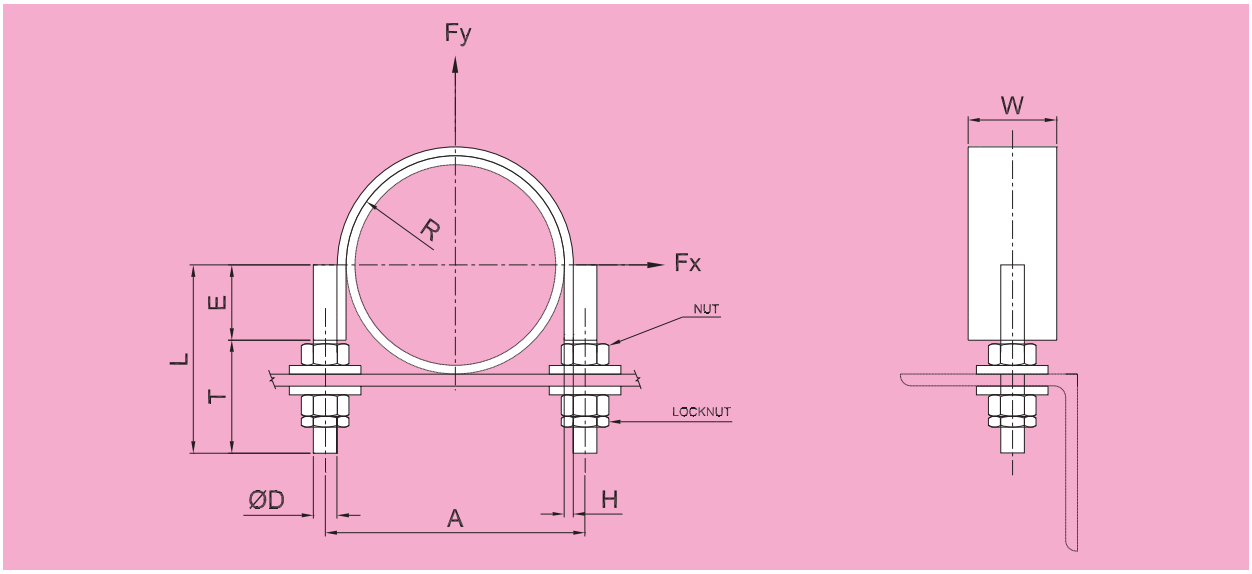

4 nuts, 2 locknuts and 4 washers per strap
Material: Carbon Steel

PART	LINE SIZE					STRAP	STUD SIZE				MAX LOAD(kN)		WEIGHT	LINER
NUMBERS	mm	in	R	A	W	H	D	L	T	E	Fy	Fx	kg	D.L'TH
F371-50	DN50	2”	32	86	50	6	10	80	65	15	16	3.5	0.5	131
F371-80	DN80	3”	47	118	50	6	12	95	70	25	24	3.0	0.7	198
F371-100	DN100	4”	59	142	50	6	12	115	85	30	24	2.5	0.8	245
F371-125	DN125	5”	73	170	50	6	12	130	95	35	24	2.0	1.0	299
F371-150	DN150	6”	86	200	50	6	16	155	100	55	45	2.5	1.4	380
F371-200	DN200	8”	112	252	50	6	16	180	100	80	45	2.0	1.7	512
F371-250	DN250	10”	139	318	65	10	20	210	100	100	70	4.0	4.2	637
F371-300	DN300	12”	164	368	65	10	20	245	115	130	70	3.5	5.0	775
F371-350	DN350	14”	180	220	65	10	20	260	110	150	70	3.0	6.3	

372 U-STRAP (GRIP TYPE SS)

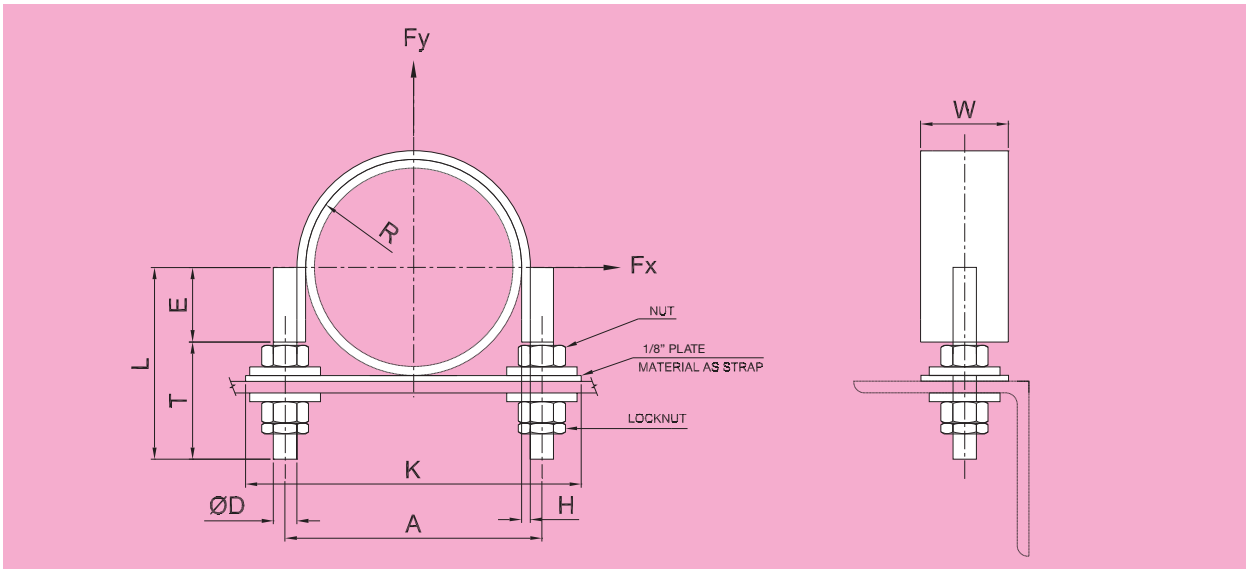

4 nuts, 2 locknuts and 4 washers per strap
Material: Stainless Steel Grade 316

PART	LINE SIZE						STRAP	STUD SIZE				MAX LOAD(kN)		WEIGHT	LINER
NUMBERS	mm	in	R	A	K	W	H	D	L	T	E	Fy	Fx	kg	D.L'TH
F372-50	DN50	2”	32	86	130	50	6	10	80	65	15	16	3.5	0.6	131
F372-80	DN80	3”	47	118	165	50	6	12	95	70	25	24	3.0	0.9	198
F372-100	DN100	4”	59	142	190	50	6	12	115	85	30	24	2.5	1.1	245
F372-125	DN125	5”	73	170	225	50	6	12	130	95	35	24	2.0	1.2	299
F372-150	DN150	6”	86	200	260	50	6	16	155	100	55	45	2.5	1.7	380
F372-200	DN200	8”	112	252	310	50	6	16	180	100	80	45	2.0	2.1	512
F372-250	DN250	10”	139	318	380	65	10	20	210	110	100	70	4.0	4.8	637
F372-300	DN300	12”	164	368	430	65	10	20	245	115	130	70	3.5	5.6	775
F372-350	DN350	14”	180	220	460	65	10	20	260	110	150	70	3.0	6.5	

373 U-STRAP (NON-GRIP TYPE CS)

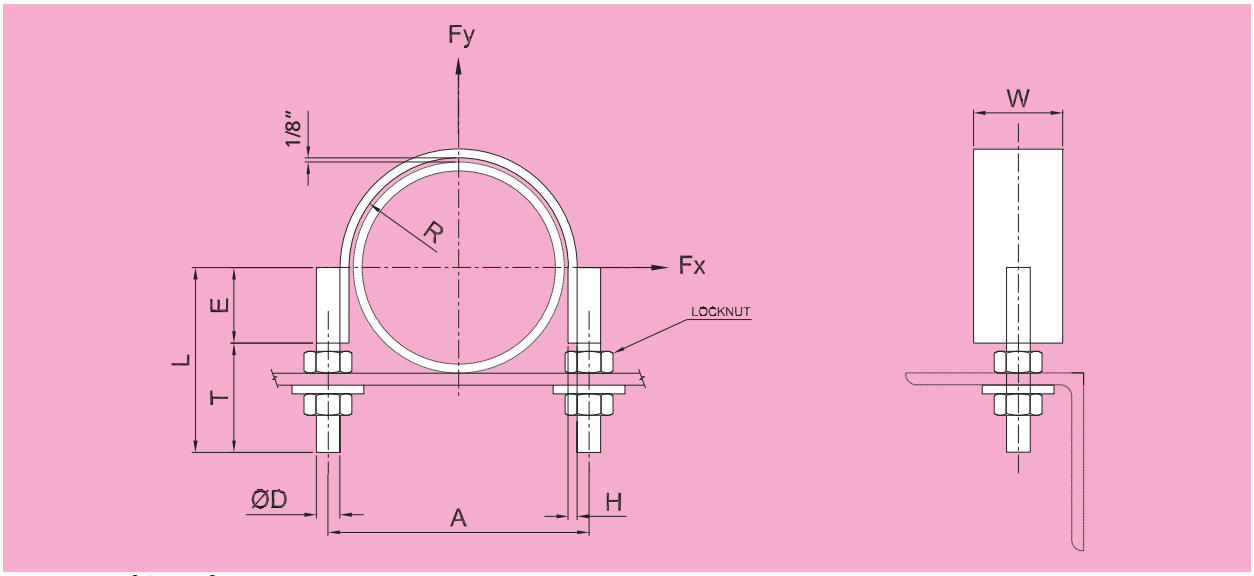

4 nuts and 2 washers per strap
Material: Carbon Steel

PART	LINE SIZE					STRAP	STUD SIZE				MAX LOAD(kN)		WEIGHT	LINER
NUMBERS	mm	in	R	A	W	H	D	L	T	E	Fy	Fx	kg	D.L'TH
F373-50	DN50	2"	35	92	50	6	10	80	65	15	16	3.5	0.5	140
F373-80	DN80	3"	50	124	50	6	12	95	70	25	24	3.0	0.7	207
F373-100	DN100	4"	62	148	50	6	12	115	85	30	24	2.5	0.8	255
F373-125	DN125	5"	76	176	50	6	12	130	95	35	24	2.0	0.9	309
F373-150	DN150	6"	89	206	50	6	16	155	100	55	45	2.5	1.3	390
F373-200	DN200	8"	116	260	50	6	16	180	100	80	45	2.0	1.7	524
F373-250	DN250	10"	143	326	65	10	20	210	110	100	70	4.0	4.0	649
F373-300	DN300	12"	168	376	65	10	20	245	115	130	70	3.5	4.8	788
F373-350	DN350	14"	184	408	65	10	20	260	110	150	70	3.0	5.3	878
F373-400	DN400	16"	209	458	80	10	20	285	105	180	70	4.0	7.3	1017
F373-450	DN450	18"	235	514	80	10	24	320	130	190	102	4.5	8.5	1118
F373-500	DN500	20"	260	564	80	10	24	345	130	215	102	4.0	9.4	1247
F373-600	DN600	24"	311	666	100	10	24	400	145	255	102	4.0	13.4	1487

374 U-STRAP (NON-GRIP TYPE SS)

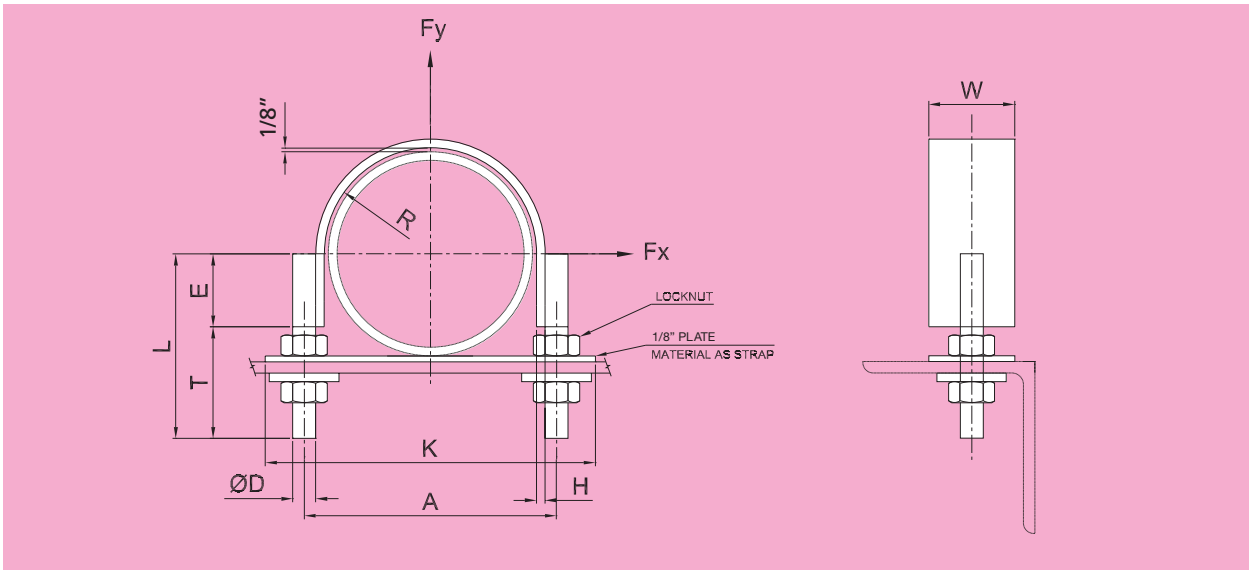

4 locknuts and 2 washers per strap
Material: Stainless Steel Grade 316

PART	LINE SIZE						STRAP	STUD SIZE				MAX LOAD(kN)		WEIGHT	LINER
NUMBERS	mm	in	R	A	K	W	H	D	L	T	E	Fy	Fx	kg	D.L'TH
F374-50	DN50	2”	35	92	130	50	6	10	80	65	15	16	3.5	0.6	140
F374-80	DN80	3”	50	124	165	50	6	12	95	70	25	24	3.0	0.9	207
F374-100	DN100	4”	62	148	190	50	6	12	115	85	30	24	2.4	1.0	255
F374-125	DN125	5”	76	176	225	50	6	12	130	95	35	24	2.5	1.2	309
F374-150	DN150	6”	89	206	260	50	6	16	155	100	55	45	2.5	1.6	390
F374-200	DN200	8”	116	260	310	50	6	16	180	100	80	45	2.0	2.0	524
F374-250	DN250	10”	143	326	380	65	10	20	210	100	100	70	4.0	4.6	649
F374-300	DN300	12”	168	376	430	65	10	20	245	115	130	70	3.5	5.5	788
F374-350	DN350	14”	184	408	460	65	10	20	260	110	150	70	3.0	6.0	878
F374-400	DN400	16”	209	458	511	80	10	20	285	105	180	70	4.0	8.3	1017
F374-450	DN450	18”	235	514	571	80	10	24	320	130	190	102	4.5	9.6	1118
F374-500	DN500	20”	260	564	621	80	10	24	345	130	215	102	4.0	10.6	1247
F374-600	DN600	24”	311	666	726	100	10	24	400	145	255	102	4.0	15.1	1487

384 A & B PIPE ALIGNMENT GUIDE

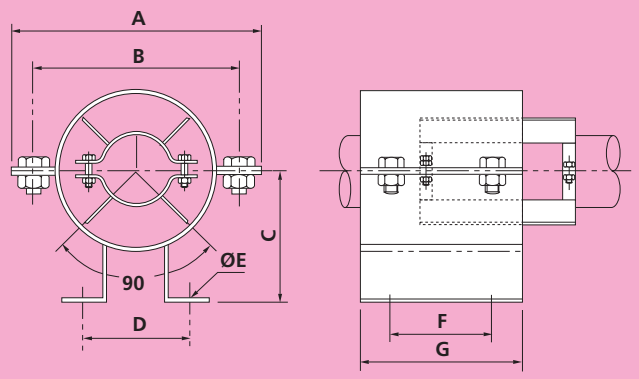

Material: Carbon Steel

PART Nos.		PIPE						TYPE A		TYPE B		MAX INSULATION
TYPE A	TYPE B	SIZE	A	B	C	D	E	F	G	F	G	THICKNESS
F384A-20	F384B-20	20	232	202	100	145	18	125	300	50	100	46
F384A-25	F384B-25	25	232	202	100	145	18	125	300	50	100	41
F384A-32	F384B-32	32	232	195	125	145	18	125	300	50	100	38
F384A-40	F384B-40	40	258	222	125	150	18	125	300	50	100	42
F384A-50	F384B-50	50	293	257	150	170	22	125	300	50	100	54
F384A-65	F384B-65	65	338	290	170	170	22	125	300	50	100	55
F384A-80	F384B-80	80	354	306	170	170	22	125	300	50	100	56
F384A-100	F384B-100	100	383	335	200	205	22	125	300	100	150	56
F384A-125	F384B-125	125	434	386	216	235	22	125	300	125	200	68
F384A-150	F384B-150	150	434	386	226	235	22	125	300	125	200	54
F384A-200	F384B-200	200	542	494	250	315	22	125	300	125	200	79
F384A-250	F384B-250	250	616	556	290	350	26	125	300	125	200	79
F384A-300	F384B-300	300	720	648	300	365	26	125	300	125	200	90
F384A-350	F384B-350	350	810	720	380	400	26	125	300	125	200	104
F384A-400	F384B-400	400	900	810	450	435	26	125	300	125	200	114
F384A-450	F384B-450	450	1020	912	480	475	26	125	300	125	200	128
F384A-500	F384B-500	500	1110	1002	500	494	26	125	300	125	200	137
F384A-600	F384B-600	600	1270	1144	530	520	26	125	300	125	200	151

COMLIN ISOLATION PRODUCTS

Comlin is a family of elastomeric materials developed over a number of years to meet the arduous and very specific requirements of the process pipework engineer.

The primary functions of the product groups shown in this section are:

- The reduction or elimination of noise and fatigue due to vibration of pipework against the supporting structure.
- The prevention of galvanic corrosion due to the contact of dissimilar metals in the presence of an electrolyte.
- The prevention of wear and/or crushing of composite, thin-wall or non-ferrous pipework.

The materials we offer have been selected to provide optimum performance characteristics over a wide range of applications; our HTFR grade is a flame-retardant material suitable for occasional operation at 350°C. Our low-friction grades, whilst providing very low resistance to sliding pipework, still retain the inherent flexibility of the backing material with no limitation as to how small the pipe can be.

We offer two standard product forms: one for applications using pipe clamps where the Comlin is inserted between the clamp and pipe, this is known as 'clamp strip'. The second is for U-bolt applications where the U-bolt is sheathed with Comlin and provided with a seating strip for protection to the underside of the pipe.

COMLIN MATERIAL CHOICE

COMLIN FR80

Our special fire-retardant grade of material has a UL94 flame rating of H-0 and an oxygen index of only 25%; it has good resistance to ozone/UV attack and has very good flex fatigue. It also has good fluid resistance and good performance in polar chemicals.

Suitable for most applications within the temperature range of –50 to 150°C, the material has excellent compression set properties, weathering resistance and mechanical strength.

Again, this material can be supplied in our low-friction form, and is designated **Comlin FR80LF**.

COMLIN RG45

A specially formulated low modulus polymer alloy suitable for applications that require a very soft, flexible support whilst retaining all the advantages of this type of material.

It has excellent low-temperature performance and is capable of operating within the temperature range –60 to 125°C, with the added advantage of being stable in an irradiated environment. It has very good compression set characteristics and withstands ozone/UV attack and weathering.

This material can be supplied in our own unique low-friction form incorporating integral ribs of polypropylene embedded into the contact face of the product. This is achieved without loss of properties or reduction of temperature range. This grade is designated **Comlin RG45LF**.

COMLIN HTFR65

This high temperature material is suitable for applications within the temperature range of –60 to 350°C. Based on silicone technology, it has excellent resistance to fire, very low toxicity and can operate continuously at 300°C with minimum loss of properties. This material has excellent resistance to ozone, UV and weathering, very good compression set and is generally resistant to oils.

Due to the high temperature range capability of this material, it is not possible to provide it with our low-friction facing.

COMPARISON OF COMLIN MATERIALS WITH NEOPRENE

Comlin RG45 and **Comlin FR80** grades compare favourably with neoprene with respect to resistance to ozone/UV attack and weathering, but are far superior when considering compression set, operational temperature range and mechanical strength.

Comlin HTFR65 performs considerably better in all respects than neoprene: resistance to ozone, UV, weathering, temperature and fire are all superior.

U-BOLT MATERIAL

The standard material for Comlin U-Bolts is carbon steel meeting the requirements of IS1367/DIN601 Grade 4.6 with nuts to ASTM A193/DIN555 Grade 4.

Other grades that are available are:

LTCS: ASTM A193 Grade L7 with ASTM A194 Grade 4 nuts

Stainless Steel: BSENISO3506 Grade A2 (Tp304) or Grade A4 (Tp316)

Carbon steel U-Bolts are supplied galvanized as standard. Zinc plating or Xylan coating are also available upon request.

Specify material and protective coating at time of ordering as follows

Part Number 801-aaa-b-c-d

Where –

aaa is the item size

b is the U-Bolt material

c is the protective coating

d is the Comlin grade – only required for type 801 and 802 U-Bolts.

Code	Material (b)	Protective Coating (c)	Comlin Grade (d)
1	Carbon Steel	Zinc Plated & Yellow Passivated	FR80
2	LTCS	Galvanised	HTFR65
3	Tp 304 StSt (A2)	Xylan Coated	
4	Tp 316 StSt (A4)	No protection	

Example of full part code would therefore be –

802-108-1-2-2 for 108mm diameter cupro-nickel pipe with carbon steel u-bolt, galvanised & lined with HTFR65 Comlin.

COMLIN MATERIAL PROPERTIES

Property	Test Method	Unit	Material Grade				
			RG45	**FR80**	**HTFR65**	**RG45LF**	**FR80LF**
Hardness, 5 Sec	D2240	Shore A	45	80	65	50	85
Specific Gravity	D297		0.97	1.24	1.31	1.05	1.31
Ultimate Tensile Strength	D412	MPa	1.2	7.2	7.5	1.2	7.2
Ultimate Elongation	D412	%	300	410	350	300	410
100% Modulus	D412	MPa	1.2	3.2	4.0	1.2	3.2
Compression Set @ 168 Hrs. 25 °C	D395B	%	13.0	27.1	10.0	13.0	27.1
Compression Set @ 168 Hrs. 100 °C	D395B	%	22.0	46.3	15.0	22.0	46.3
Tension Set	D412	%	5.0	10.0	12.0	5.0	10.0
Brittle Point	D746	°C	-76.0	-56.0	-70.0	-76.0	-56.0
Maximum Continuous Temperature		°C	125	150	300	125	150
Oxygen Index	D2863		–	25.0	35.0	–	25.0
Horizontal Burn	UL94 HB		–	H-0	H-0	–	H-0
Ozone/UV Resistance			V.Good	V.Good	V.Good	V.Good	V.Good
Dielectric Constant			2.3	2.44	2.8	2.3	2.44
Colour Code							
Type 801			–*	Black	Grey	–	–
Type 802			–*	Red	Grey	–	–
Type 901			–	–	–	–*	Black
Type 902			–	–	–	–*	Red
Type 816			Beige	Green	Grey	–	–
Type 817			Beige	Green	Grey	–	–
Type 818			–	Green	–	–	–
Type 916			–	–	–	Beige	Green
Type 917			–	–	–	Beige	Green
Type 918			–	–	–	–	Green

*Available upon special request — non-stocked products.

801 COMLIN GRIP TYPE LINED U-BOLT FOR STAINLESS STEEL & GALVANISED PIPES -60°C TO +300°C

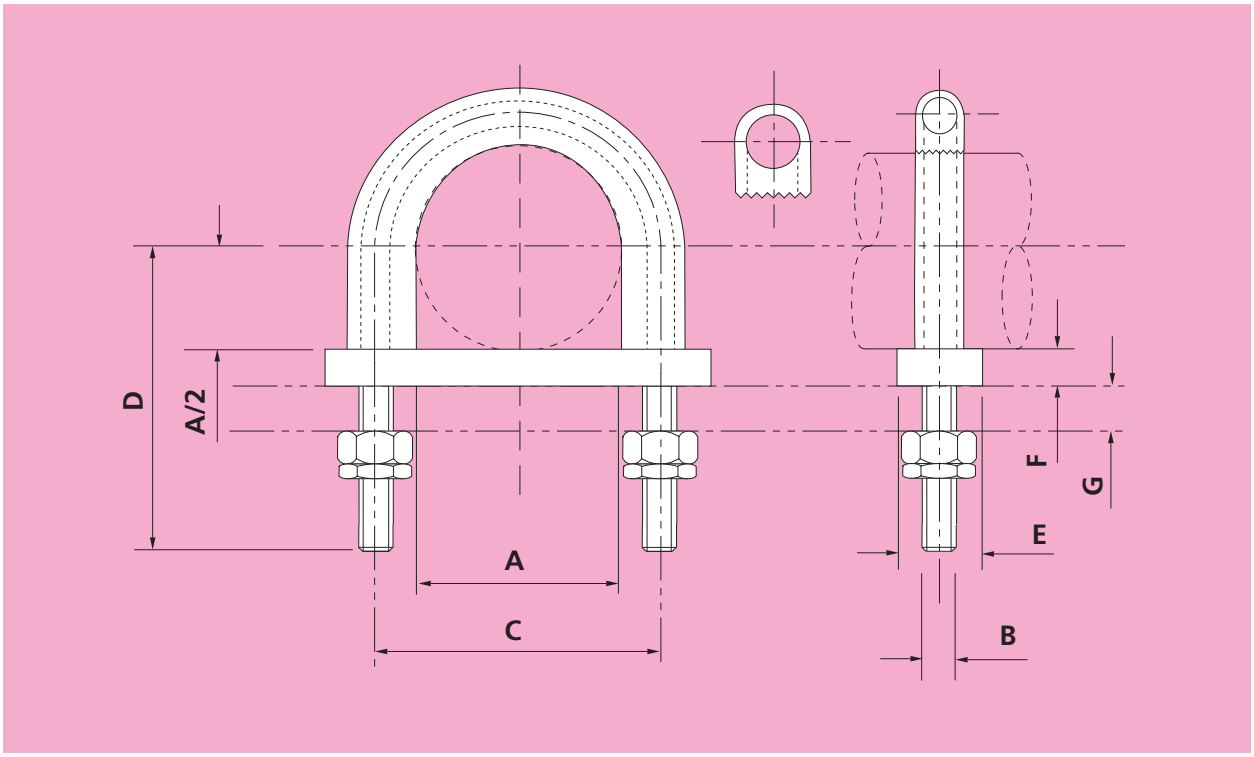

PART NUMBER	DIMENSIONS (mm)							
	A	B	C	D	E	F	G	THD Length
801-021	21	6	37	60	20	8	30	60
801-027	27	6	43	65	20	8	32	64
801-034	34	6	50	65	20	8	28	60
801-043	43	10	69	70	25	10	19	69
801-049	49	10	75	80	25	10	26	76
801-061	61	10	87	90	25	10	30	80
801-072	72	12	98	95	25	10	25	83
801-089	89	12	115	100	25	10	22	80
801-115	115	12	141	110	25	10	19	77
801-140	140	12	166	135	25	10	31	89

PART NUMBER	DIMENSIONS (mm)							
	A	B	C	D	E	F	G	THD Length
801-168	168	16	210	180	35	15	49	128
801-219	219	16	261	200	35	15	44	123
801-245	245	16	287	210	35	15	41	120
801-273	273	16	315	225	35	15	42	121
801-324	324	16	366	250	35	15	41	120
801-356	356	16	398	265	35	15	40	119
801-407	407	16	449	300	35	15	50	129

ORDER BY: PART NUMBER '801-aaa-b-c-d'
AVAILABLE IN GRADES FR80 & HTFR65.

802 COMLIN GRIP TYPE LINED U-BOLT FOR COPPER & CUPRO-NICKEL PIPES -60°C TO +300°C

PART NUMBER	DIMENSIONS (mm)							
	A	B	C	D	E	F	G	THD Length
802-016	16	6	32	60	20	8	32	60
802-025	25	6	41	65	20	8	33	65
802-030	30	6	46	65	20	8	30	62
802-038	38	10	64	70	25	10	21	70
802-045	45	10	71	80	25	10	28	78
802-057	57	10	83	90	25	10	32	82

PART NUMBER	DIMENSIONS (mm)							
	A	B	C	D	E	F	G	THD Length
802-076	76	12	102	100	25	10	28	86
802-089	89	12	115	110	25	10	32	90
802-108	108	12	134	120	25	10	32	90
802-159	159	16	201	165	35	15	39	118
802-219	219	16	261	200	35	15	44	123

ORDER BY: PART NUMBER '802-aaa-b-c-d'
AVAILABLE IN GRADES FR80 & HTFR65.

901 COMLIN NON-GRIP TYPE LINED U-BOLT FOR STAINLESS STEEL & GALVANISED PIPES -60°C TO +150°C

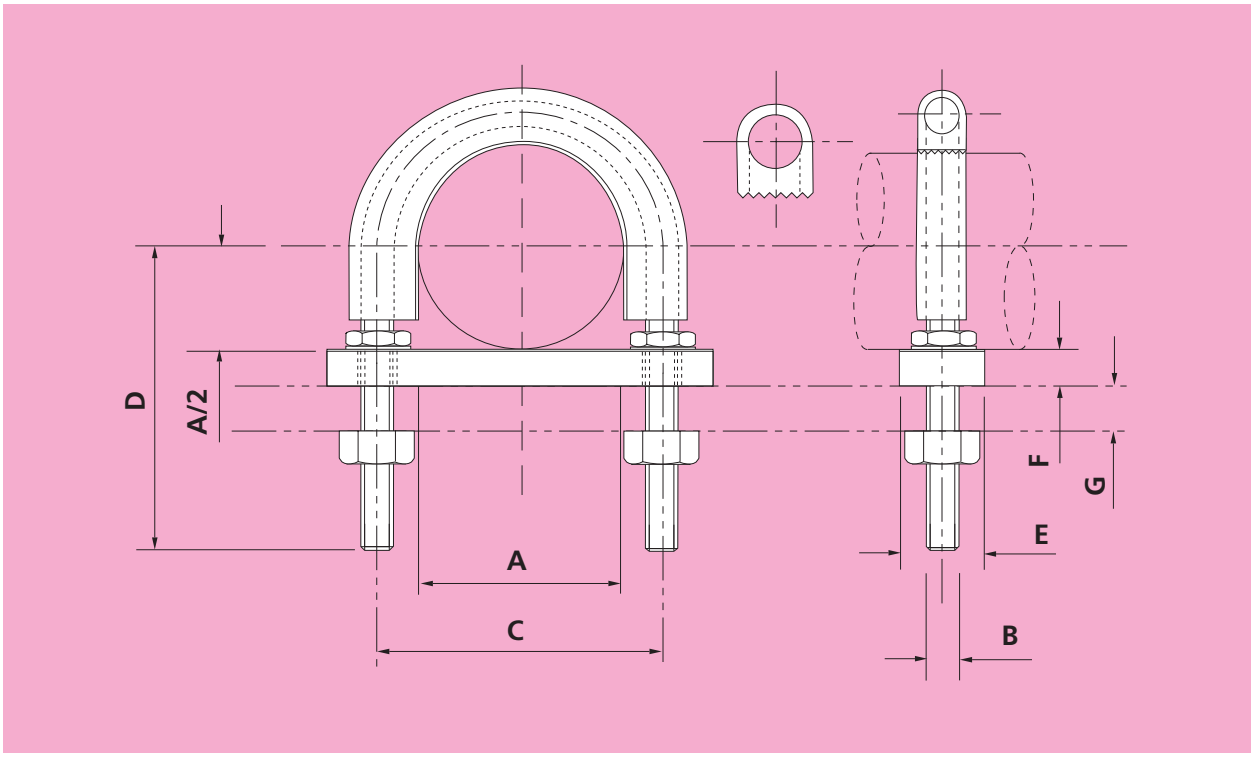

PART NUMBER	DIMENSIONS (mm)							
	A	B	C	D	E	F	G	THD Length
901-021	21	6	37	60	20	8	30	60
901-027	27	6	43	65	20	8	32	64
901-034	34	6	50	65	20	8	28	60
901-043	43	10	69	70	25	10	19	69
901-049	49	10	75	80	25	10	26	76
901-061	61	10	87	90	25	10	30	80
901-072	72	12	98	95	25	10	25	83
901-089	89	12	115	100	25	10	22	80
901-115	115	12	141	110	25	10	19	77
901-140	140	12	166	135	25	10	31	89

PART NUMBER	DIMENSIONS (mm)							
	A	B	C	D	E	F	G	THD Length
901-168	168	16	210	180	35	15	49	128
901-219	219	16	261	200	35	15	44	123
901-245	245	16	287	210	35	15	41	120
901-273	273	16	315	225	35	15	42	121
901-324	324	16	366	250	35	15	41	120
901-356	356	16	398	265	35	15	40	119
901-407	407	16	449	300	35	15	50	129

ORDER BY: PART NUMBER '901-aaa-b-c'
AVAILABLE IN GRADE FR80LF ONLY

902 COMLIN NON-GRIP TYPE LINED U-BOLT FOR COPPER & CUPRO-NICKEL PIPES -60°C TO +150°C

PART NUMBER	DIMENSIONS (mm)							
	A	B	C	D	E	F	G	THD Length
902-016	16	6	32	60	20	8	32	60
902-025	25	6	41	65	20	8	33	65
902-030	30	6	46	65	20	8	30	62
902-038	38	10	64	70	25	10	21	70
902-045	45	10	71	80	25	10	28	78
902-057	57	10	83	90	25	10	32	82

PART NUMBER	DIMENSIONS (mm)							
	A	B	C	D	E	F	G	THD Length
902-076	76	12	102	100	25	10	28	86
902-089	89	12	115	110	25	10	32	90
902-108	108	12	134	120	25	10	32	90
902-159	159	16	201	165	35	15	39	118
902-219	219	16	261	200	35	15	44	123

ORDER BY: PART NUMBER '902-aaa-b-c'
AVAILABLE IN GRADE FR80LF ONLY

816 AND 817 COMLIN CLAMP STRIP -60°C to +300°C

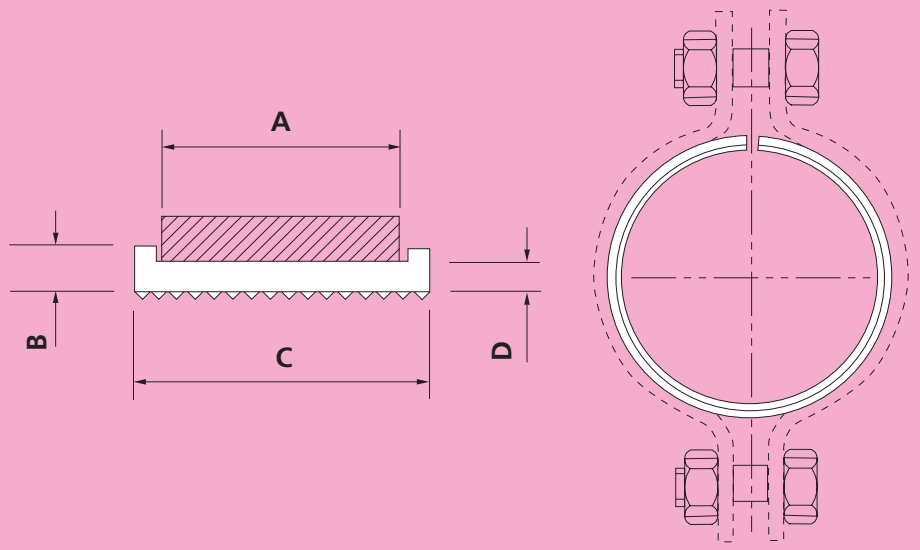

ORDER BY: PART NUMBER, LENGTH AND COMLIN GRADE.
AVAILABLE EITHER CUT TO REQUIRED LENGTH OR ANY LENGTH UP TO 25 METRES.

PART NUMBER	DIMENSIONS (mm)				
	A	B	C	D	E
816-30	25	5	40	3	30
816-40	35	5	50	3	40
816-45	40	5	55	3	45
816-50	45	5	60	3	50
816-60	55	5	70	3	60
816-65	60	5	80	3	65
816-70	65	5	85	3	70
816-75	70	5	90	3	75
816-80	75	5	95	3	80
816-90	85	6	105	3	90
816-100	95	6	115	3	100
816-110	105	6	125	3	110
816-130	125	6	145	3	130
816-140	135	6	155	3	145
816-150	150	6	165	3	150

PART NUMBER	DIMENSIONS (mm)				
	A	B	C	D	E
817-30	25	7.5	45	5	30
817-40	35	8.5	57	6	40
817-50	45	8.5	67	6	50
817-60	55	8.5	77	6	60
817-70	65	8.5	85	6	70
817-90	85	14.5	105	9.5	90
817-110	105	14.5	125	9.5	110
817-130	125	14.5	145	9.5	130
817-150	150	17.5	165	12.5	150

Recommended Length of Clamp Strip vs Pipe Size

DIMENSIONS (mm)											
Pipe	816	817	817	817	817	817	817	817	817	817	817
O/D	ALL	20	30	40	50	60	70	90	110	130	150
26.9	88	88	90	91	91	91	91	94	94	94	98
33.7	109	109	111	112	112	112	112	116	116	116	119
42.4	136	136	138	139	139	139	139	143	143	143	146
48.3	155	155	157	158	158	158	158	162	162	162	165
60.3	193	193	195	196	196	196	196	199	199	199	203
76.1	242	242	244	245	245	245	245	249	249	249	252
88.9	282	282	285	286	286	286	286	289	289	289	292
114.3	362	362	364	365	365	365	365	369	369	369	372
139.7	442	442	444	445	445	445	445	449	449	449	452
168.3	532	532	534	535	535	535	535	539	539	539	542
219.1	691	691	694	695	695	695	695	698	698	698	701
244.5	771	771	773	774	774	774	774	778	778	778	781
273.0	861	861	863	864	864	864	864	868	868	868	871
323.9	1021	1021	1023	1024	1024	1024	1024	1028	1028	1028	1031
355.6	1120	1120	1122	1123	1123	1123	1123	1127	1127	1127	1130
406.4	1280	1280	1282	1283	1283	1283	1283	1287	1287	1287	1290
457.0	1439	1439	1441	1442	1442	1442	1442	1446	1446	1446	1449
508.0	1599	1599	1601	1602	1602	1602	1602	1606	1606	1606	1609
610.0	1920	1920	1922	1923	1923	1923	1923	1926	1926	1926	1929
762.0	2397	2397	2399	2400	2400	2400	2400	2404	2404	2404	2407
914.0	2875	2875	2877	2878	2878	2878	2878	2881	2881	2881	2885

916 AND 917 COMLIN LINED CLAMP STRIP -60°C TO +150°C

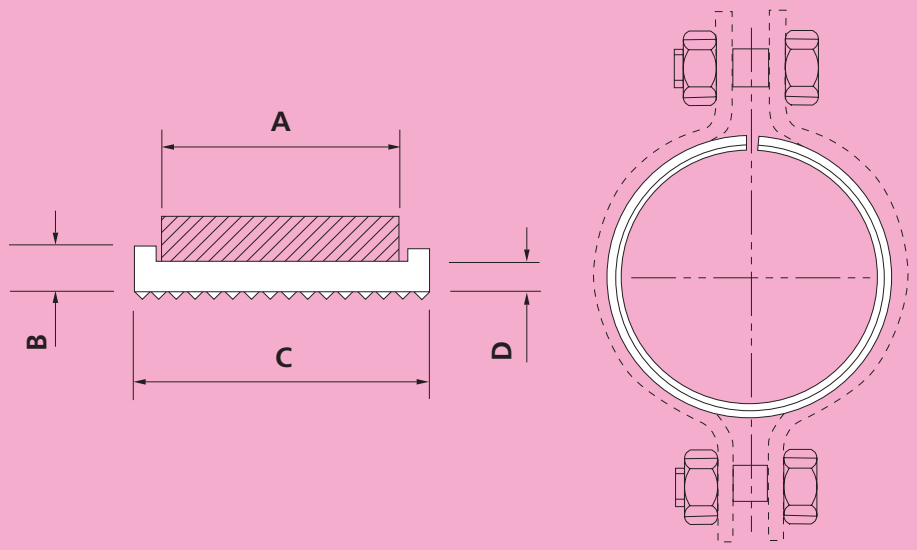

ORDER BY: PART NUMBER & LENGTH
AVAILABLE IN GRADE FR80LF ONLY IN ANY LENGTH UP TO 25 METRES.

PART NUMBER	DIMENSIONS (mm)				
	A	B	C	D	E
916-30	25	5	40	3	30
916-40	35	5	50	3	40
916-45	40	5	55	3	45
916-50	45	5	60	3	50
916-60	55	5	70	3	60
916-65	60	5	80	3	65
916-70	65	5	85	3	70
916-75	70	5	90	3	75
916-80	75	5	95	3	80
916-90	85	6	105	3	90
916-100	95	6	115	3	100
916-110	105	6	125	3	110
916-130	125	6	145	3	130
916-140	135	6	155	3	145
916-150	150	6	165	3	150

PART NUMBER	DIMENSIONS (mm)				
	A	B	C	D	E
917-30	25	7.5	45	5	30
917-40	35	8.5	57	6	40
917-50	45	8.5	67	6	50
917-60	55	8.5	77	6	60
917-70	65	8.5	85	6	70
917-90	85	14.5	105	9.5	90
917-110	105	14.5	125	9.5	110
917-130	125	14.5	145	9.5	130
917-150	150	17.5	165	12.5	150

Recommended Length of Clamp Strip vs Pipe Size

DIMENSIONS (mm)											
Pipe	916	917	917	917	917	917	917	917	917	917	917
O/D	ALL	20	30	40	50	60	70	90	110	130	150
26.9	88	88	90	91	91	91	91	94	94	94	98
33.7	109	109	111	112	112	112	112	116	116	116	119
42.4	136	136	138	139	139	139	139	143	143	143	146
48.3	155	155	157	158	158	158	158	162	162	162	165
60.3	193	193	195	196	196	196	196	199	199	199	203
76.1	242	242	244	245	245	245	245	249	249	249	252
88.9	282	282	285	286	286	286	286	289	289	289	292
114.3	362	362	364	365	365	365	365	369	369	369	372
139.7	442	442	444	445	445	445	445	449	449	449	452
168.3	532	532	534	535	535	535	535	539	539	539	542
219.1	691	691	694	695	695	695	695	698	698	698	701
244.5	771	771	773	774	774	774	774	778	778	778	781
273.0	861	861	863	864	864	864	864	868	868	868	871
323.9	1021	1021	1023	1024	1024	1024	1024	1028	1028	1028	1031
355.6	1120	1120	1122	1123	1123	1123	1123	1127	1127	1127	1130
406.4	1280	1280	1282	1283	1283	1283	1283	1287	1287	1287	1290
457.0	1439	1439	1441	1442	1442	1442	1442	1446	1446	1446	1449
508.0	1599	1599	1601	1602	1602	1602	1602	1606	1606	1606	1609
610.0	1920	1920	1922	1923	1923	1923	1923	1926	1926	1926	1929
762.0	2397	2397	2399	2400	2400	2400	2400	2404	2404	2404	2407
914.0	2875	2875	2877	2878	2878	2878	2878	2881	2881	2881	2885

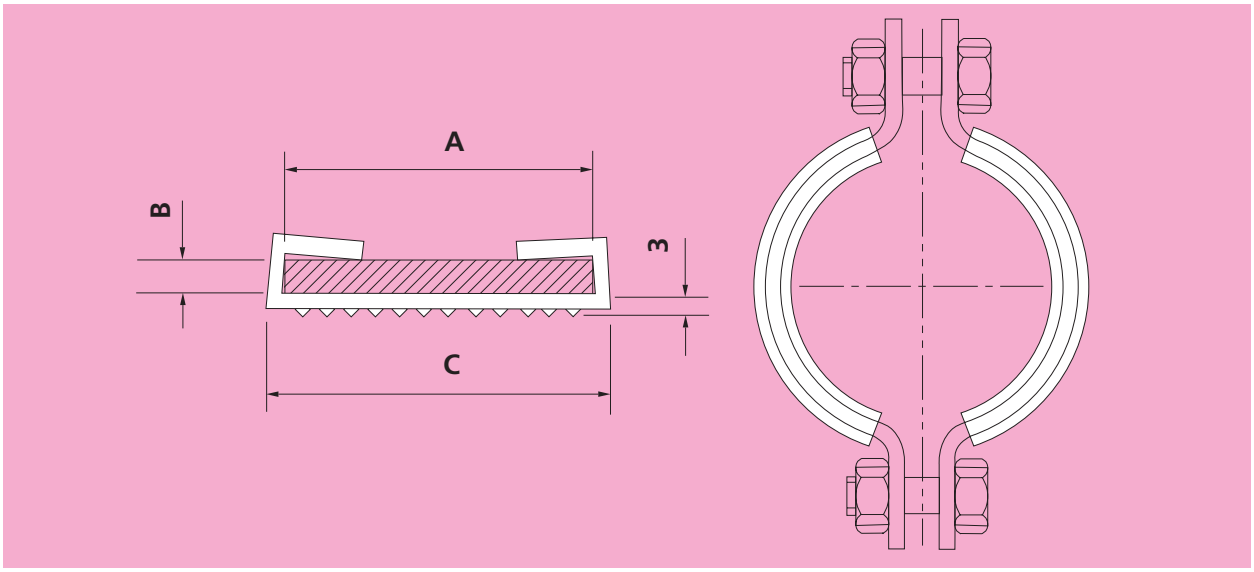

818 COMLIN GRIP CLAMP STRIP -60°C TO +300°C

PART NUMBER	A	B	C
818 - 025 x 06	25	6	30
818 - 035 x 06	35	6	40
818 - 050 x 06	50	6	55
818 - 050 x 10	50	10	55
818 - 065 x 10	65	10	70
818 - 080 x 10	80	10	85
818 - 100 x 10	100	10	105
818 -100 x 20	100	20	105

ORDER BY: PART NUMBER, LENGTH & COMLIN GRADE
AVAILABLE IN GRADES FR80 & HTFR65 IN ANY LENGTH UP TO 25 METRES.

918 COMLIN LINED CLAMP STRIP -60°C TO +150°C

PART NUMBER	A	B	C
918 - 025 x 06	25	6	30
918 - 035 x 06	35	6	40
918 - 050 x 06	50	6	55
918 - 050 x 10	50	10	55
918 - 065 x 10	65	10	70
918 - 080 x 10	80	10	85
918 - 100 x 10	100	10	105
918 - 100 x 20	100	20	105

ORDER BY: PART NUMBER & LENGTH
AVAILABLE IN GRADE FR80LF ONLY IN ANY LENGTH UP TO 25 METRES.

371-CM1 U-STRAP (GRIP TYPE CS WITH COMLIN)

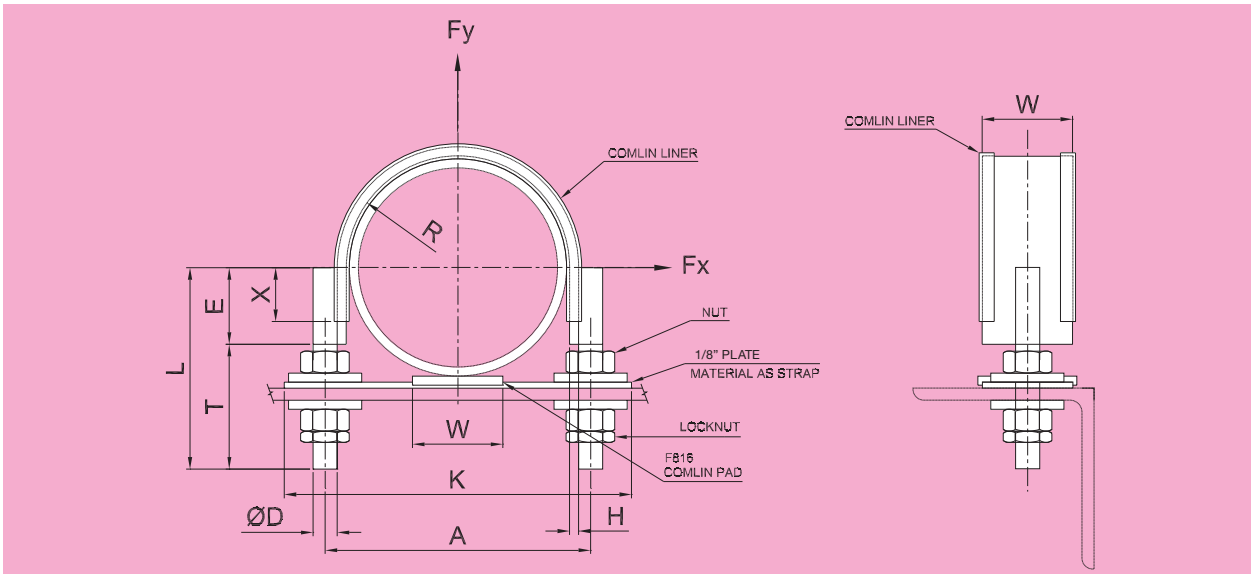

Comlin liner for U-strap = F818 x "W" x "H": Gr.FR80 or HTFR65
4 nuts, 2 locknuts and 4 washers per strap
Material: Carbon Steel

PART	LINE SIZE						STRAP	STUD SIZE				MAX LOAD(kN)		WEIGHT	LINER
NUMBER	mm	in	R	A	K	W	H	D	L	T	E	Fy	Fx	kg	D.L'TH
F371-50	DN50	2"	35	92	130	50	6	10	80	65	15	16	3.5	0.7	140
F371-80	DN80	3"	50	124	165	50	6	12	95	70	25	24	3.0	0.9	207
F371-100	DN100	4"	62	148	190	50	6	12	115	85	30	24	2.5	1.1	255
F371-125	DN125	5"	76	176	225	50	6	12	130	95	35	24	2.0	1.3	309
F371-150	DN150	6"	89	206	260	50	6	16	155	100	55	45	2.5	1.7	390
F371-200	DN200	8"	116	260	310	60	6	16	180	100	80	45	2.0	2.1	524
F371-250	DN250	10"	143	326	380	65	10	20	210	110	100	70	4.0	4.8	649
F371-300	DN300	12"	168	376	430	65	10	20	245	115	130	70	3.5	5.7	788
F371-350	DN350	14"	184	408	460	65	10	20	260	110	150	70	3.0	6.3	878

372-CM1 U-STRAP (GRIP TYPE SS WITH COMLIN)

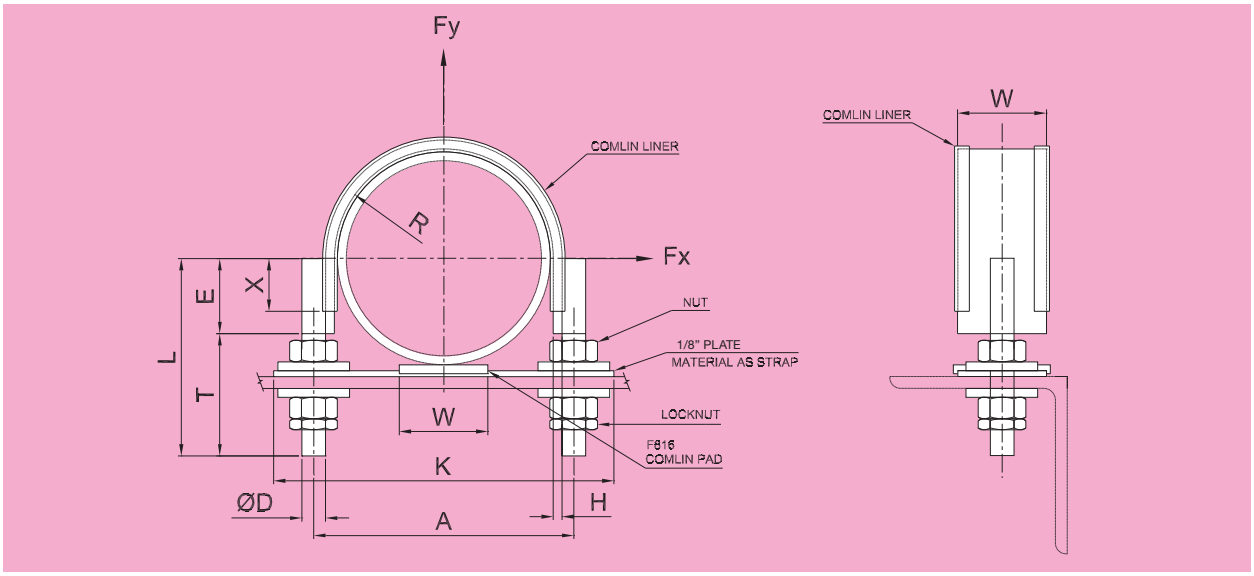

Comlin liner for U-strap = F818 x "W" x "H": Gr.FR80 or HTFR65
4 nuts, 2 locknuts and 4 washers per strap
Material: Stainless Steel Grade 316

PART	LINE SIZE						STRAP	STUD SIZE				MAX LOAD(kN)		WEIGHT	LINER
NUMBER	mm	in	R	A	K	W	H	D	L	T	E	Fy	Fx	kg	D.L'TH
F372-50	DN50	2"	35	92	130	50	6	10	80	65	15	16	3.5	0.7	140
F372-80	DN80	3"	50	124	165	50	6	12	95	70	25	24	3.0	0.9	207
F372-100	DN100	4"	62	148	190	50	6	12	115	85	30	24	2.5	1.1	255
F372-125	DN125	5"	76	176	225	50	6	12	130	95	35	24	2.0	1.3	309
F372-150	DN150	6"	89	206	260	50	6	16	155	100	55	45	2.5	1.7	390
F372-200	DN200	8"	116	260	310	50	6	16	180	100	80	45	2.0	2.1	524
F372-250	DN250	10"	143	326	380	65	10	20	210	110	100	70	4.0	4.8	649
F372-300	DN300	12"	168	376	430	65	10	20	245	115	130	70	3.5	5.7	788
F372-350	DN350	14"	184	408	460	65	10	20	260	110	150	70	3.0	6.3	878

373-CM1 U-STRAP (NON-GRIP TYPE CS WITH COMLIN)

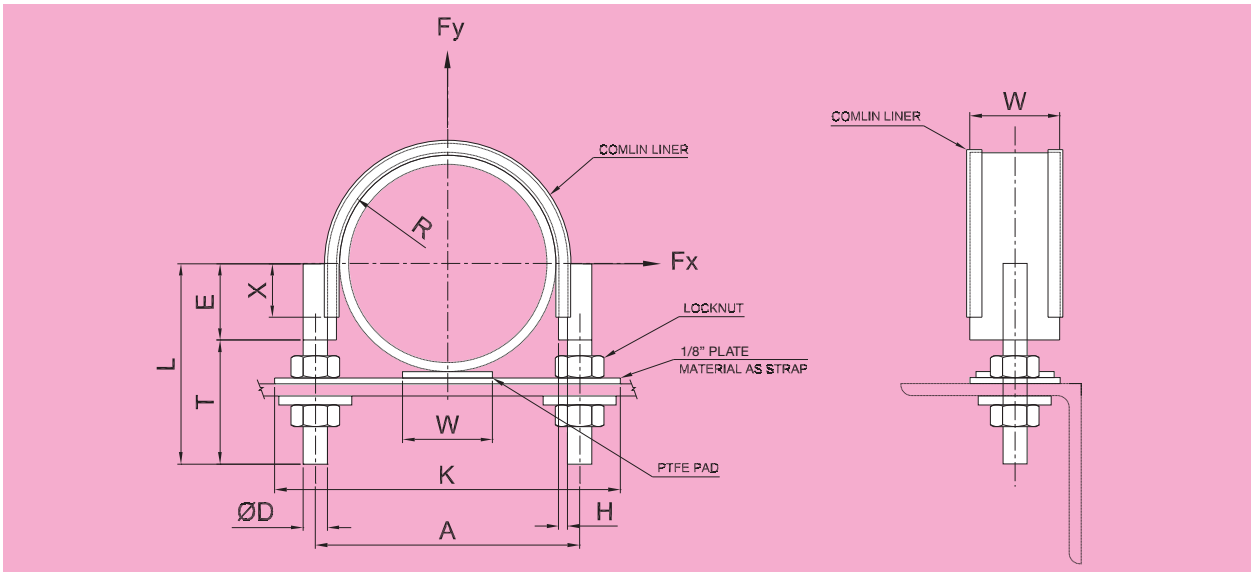

Comlin liner for U-strap = F918 x "W" x "H": Gr.FR80LF. PTFE for lower pad = 25% glass filled PTFE (etched one side)
4 locknuts and 2 washers per strap
Material: Carbon Steel

PART	LINE SIZE						STRAP	STUD SIZE				MAX LOAD(kN)		WEIGHT	LINER
NUMBER	mm	in	R	A	K	W	H	D	L	T	E	Fy	Fx	kg	D.L'TH
F373-50	DN50	2"	35	92	130	50	6	10	80	65	15	16	3.5	0.6	140
F373-80	DN80	3"	50	124	165	50	6	12	95	70	25	24	3.0	0.9	207
F373-100	DN100	4"	62	148	190	50	6	12	115	85	30	24	2.5	1.0	255
F373-125	DN125	5"	76	176	225	50	6	12	130	95	35	24	2.0	1.2	309
F373-150	DN150	6"	89	206	260	50	6	16	155	100	55	45	2.5	1.6	390
F373-200	DN200	8"	116	260	310	50	6	16	180	100	80	45	2.0	2.0	524
F373-250	DN250	10"	143	326	380	65	10	20	210	110	100	70	4.0	4.6	649
F373-300	DN300	12"	168	376	430	65	10	20	245	115	130	70	3.5	5.5	788
F373-350	DN350	14"	184	408	460	65	10	20	260	110	150	70	3.0	6.0	878
F373-400	DN400	16"	209	458	511	80	10	20	285	105	180	70	4.0	8.3	1017
F373-450	DN450	18"	235	514	571	80	10	24	320	130	190	102	4.5	9.6	1118
F373-500	DN500	20"	260	564	621	80	10	24	345	130	215	102	4.0	10.6	1247
F373-600	DN600	24"	311	666	726	100	10	24	400	145	255	102	4.0	15.1	1487

374-CM1 U-STRAP (NON-GRIP TYPE SS WITH COMLIN)

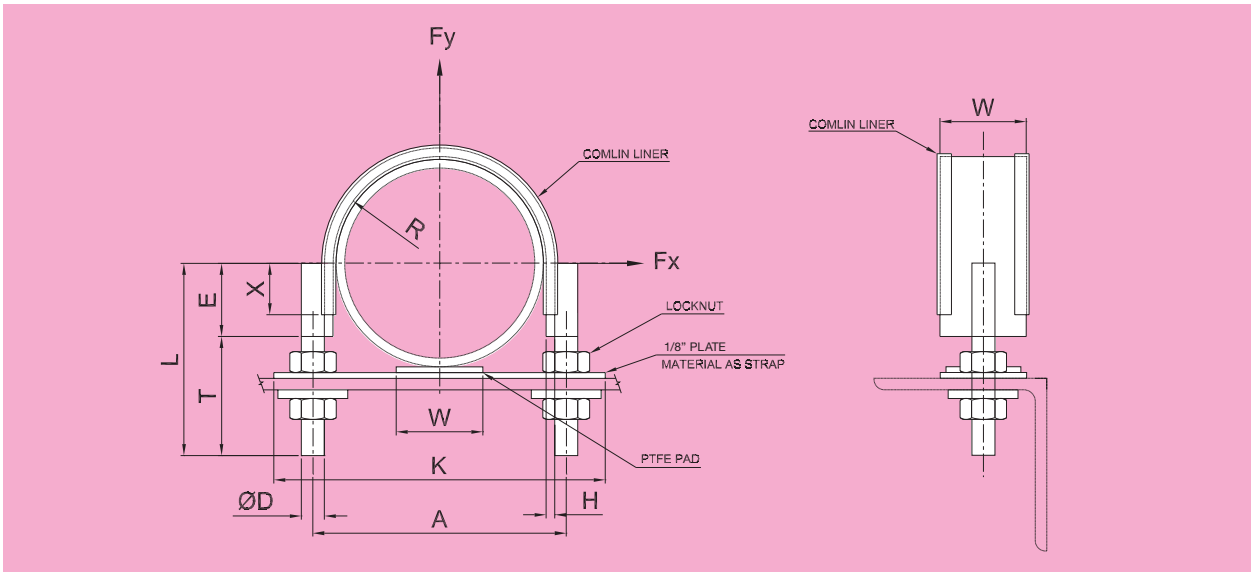

Comlin liner for U-strap = F918 x "W" x "H": Gr.FR80LF. PTFE for lower pad = 25% glass filled PTFE (etched one side)
4 locknuts and 2 washers per strap
Material: Stainless Steel Grade 316

PART	LINE SIZE						STRAP	STUD SIZE				MAX LOAD(kN)		WEIGHT	LINER
NUMBER	mm	in	R	A	K	W	H	D	L	T	E	Fy	Fx	kg	D.L'TH
F374-50	DN50	2"	35	92	130	50	6	10	80	65	15	16	3.5	0.6	140
F374-80	DN80	3"	50	124	165	50	6	12	95	70	25	24	3.0	0.9	207
F374-100	DN100	4"	62	148	190	50	6	12	115	85	30	24	2.5	1.0	255
F374-125	DN125	5"	76	176	225	50	6	12	130	95	35	24	2.0	1.2	309
F374-150	DN150	6"	89	206	260	50	6	16	155	100	55	45	2.5	1.6	390
F374-200	DN200	8"	116	260	310	50	6	16	180	100	80	45	2.0	2.0	524
F374-250	DN250	10"	143	326	380	65	10	20	210	110	100	70	4.0	4.6	649
F374-300	DN300	12"	168	376	430	65	10	20	245	115	130	70	3.5	5.5	788
F374-350	DN350	14"	184	408	460	65	10	20	260	110	150	70	3.0	6.0	878
F374-400	DN400	16"	209	458	511	80	10	20	285	105	180	70	4.0	8.3	1017
F374-450	DN450	18"	235	514	571	80	10	24	320	130	190	102	4.5	9.6	1118
F374-500	DN500	20"	260	564	621	80	10	24	345	130	215	102	4.0	10.6	1247
F374-600	DN600	24"	311	666	726	100	10	24	400	145	255	102	4.0	15.1	1487

TWO BOLT PIPE CLAMP WITH COMLIN — MAX. TEMPERATURE 300°C

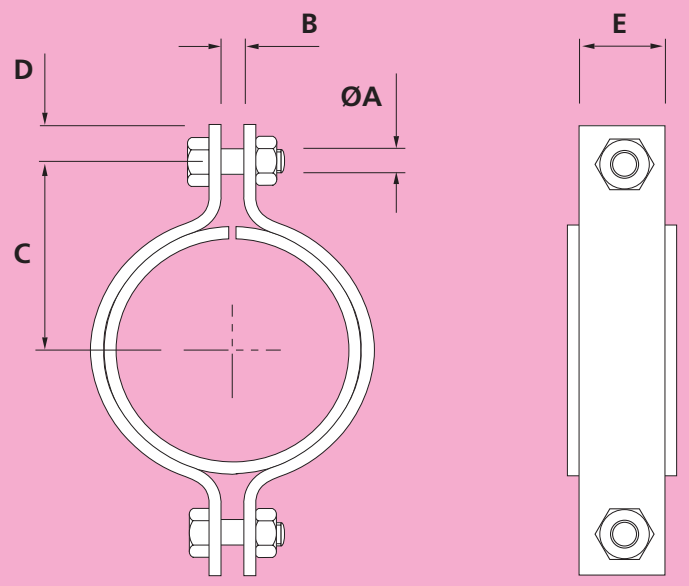

Order by Part Number, Comlin Type and Comlin Grade e.g. PC2-CM2-100-2/817/FR80
Material: Carbon Steel and Comlin. Also available in Stainless Steel.
Pipe Clamps with other Load Capacities are also available.
**** Do not exceed the Maximum Temperature for the Grade of Comlin used.***

PART NUMBER FOR COMLIN TYPE 816, 916, 818 & 918	PART NUMBER FOR COMLIN TYPE 817 &917	PIPE O/D		A	B	C		D	E	WEIGHT	*LOAD CAPACITY AT 300°C
		mm	in	mm	mm	mm	in	mm	mm	kgf	kgf
PC2-CM1-15-0	PC2-CM2-15-0	21.3	0.839	12	15	35	1 3/8	18	35	0.4	390
PC2-CM1-20-0	PC2-CM2-20-0	26.7	1.051	12	15	40	1 9/16	18	35	0.4	390
PC2-CM1-25-0	PC2-CM2-25-0	33.4	1.315	12	15	45	1 3/4	18	35	0.5	390
PC2-CM1-32-0	PC2-CM2-32-0	42.2	1.661	12	15	50	1 15/16	18	35	0.5	390
PC2-CM1-40-0	PC2-CM2-40-0	48.3	1.902	12	15	55	2 3/16	18	35	0.5	390
PC2-CM1-50-0	PC2-CM2-50-0	60.3	2.375	12	15	60	2 3/8	18	35	0.6	390
PC2-CM1-65-2	PC2-CM2-65-2	73	2.875	16	17	70	2 3/4	24	40	1.0	590
PC2-CM1-80-2	PC2-CM2-80-2	88.9	3.500	16	17	80	3 1/8	24	40	1.1	530
PC2-CM1-100-0	PC2-CM2-100-0	114.3	4.500	12	15	90	3 9/16	18	35	0.8	270
PC2-CM1-100-2	PC2-CM2-100-2	114.3	4.500	16	17	100	3 15/16	24	40	1.7	740
PC2-CM1-150-0	PC2-CM2-150-0	168.3	6.625	12	15	120	4 3/4	18	40	1.4	340
PC2-CM1-150-2	PC2-CM2-150-2	168.3	6.625	16	17	125	4 15/16	24	40	2.1	590
PC2-CM1-200-1	PC2-CM2-200-1	219.1	8.625	16	17	155	6 1/8	24	40	2.5	460
PC2-CM1-200-2	PC2-CM2-200-2	219.1	8.625	16	17	160	6 5/16	24	45	3.5	790
PC2-CM1-250-1	PC2-CM2-250-1	273	10.750	16	17	180	7 1/16	24	40	2.9	410
PC2-CM1-250-3	PC2-CM2-250-3	273	10.750	20	20	195	7 11/16	30	60	6.9	1240
PC2-CM1-300-2	PC2-CM2-300-2	323.9	12.750	16	17	210	8 1/4	24	45	4.6	650
PC2-CM1-300-4	PC2-CM2-300-4	323.9	12.750	24	25	240	9 7/16	36	65	14.8	1830
PC2-CM1-350-3	PC2-CM2-350-3	355.6	14.000	20	20	235	9 1/4	30	60	8.3	1080
PC2-CM1-350-5	PC2-CM2-350-5	355.6	14.000	30	29	265	10 7/16	45	90	23.2	3050
PC2-CM1-400-4	PC2-CM2-400-4	406.4	16.000	24	25	280	11	36	65	17.3	1830
PC2-CM1-400-6	PC2-CM2-400-6	406.4	16.000	36	41	295	11 5/8	54	110	32.3	3810
PC2-CM1-450-4	PC2-CM2-450-4	457.2	18.000	24	25	310	12 3/16	36	65	19.1	1830
PC2-CM1-450-6	PC2-CM2-450-6	457.2	18.000	36	41	320	12 5/8	54	110	35.0	3810
PC2-CM1-500-4	PC2-CM2-500-4	508	20.000	24	25	335	13 3/16	36	65	20.7	1830
PC2-CM1-500-7	PC2-CM2-500-7	508	20.000	42	45	365	14 3/8	63	130	50.0	5470
PC2-CM1-550-5	PC2-CM2-550-5	558.8	22.000	30	29	370	14 9/16	45	90	32.3	2920
PC2-CM1-550-7	PC2-CM2-550-7	558.8	22.000	42	45	395	15 9/16	63	130	63.0	5470
PC2-CM1-600-5	PC2-CM2-600-5	609.6	24.000	30	29	395	15 9/16	45	90	34.5	2660
PC2-CM1-600-7	PC2-CM2-600-7	609.6	24.000	42	45	420	16 9/16	63	130	66.9	5470
PC2-CM1-650-5	PC2-CM2-650-5	660.4	26.000	30	29	420	16 9/16	45	90	36.7	2530
PC2-CM1-650-7	PC2-CM2-650-7	660.4	26.000	42	45	445	17 1/2	63	150	81.4	5470
PC2-CM1-700-5	PC2-CM2-700-5	711.2	28.000	30	29	445	17 1/2	45	90	38.9	2420
PC2-CM1-700-7	PC2-CM2-700-7	711.2	28.000	42	45	470	18 1/2	63	150	85.9	5470
PC2-CM1-750-5	PC2-CM2-750-5	762	30.000	30	29	475	18 11/16	45	110	41.1	2350
PC2-CM1-750-8	PC2-CM2-750-8	762	30.000	48	52	515	20 1/4	72	150	112.8	7610
PC2-CM1-800-5	PC2-CM2-800-5	812.8	32.000	30	29	500	19 11/16	45	110	53.1	2780
PC2-CM1-800-8	PC2-CM2-800-8	812.8	32.000	48	52	560	22 1/16	72	150	158.9	10910
PC2-CM1-850-5	PC2-CM2-850-5	863.6	34.000	30	29	525	20 11/16	45	110	55.8	2690
PC2-CM1-850-8	PC2-CM2-850-8	863.6	34.000	48	52	590	23 1/4	72	150	167.2	10910
PC2-CM1-900-6	PC2-CM2-900-6	914.4	36.000	36	41	570	22 7/16	54	110	75.6	3760
PC2-CM1-900-8	PC2-CM2-900-8	914.4	36.000	48	52	615	24 3/16	72	150	174.6	10910
PC2-CM1-950-6	PC2-CM2-950-6	965	38.000	36	41	595	23 7/16	54	130	79.0	3660
PC2-CM1-950-8	PC2-CM2-950-8	965	38.000	48	52	640	25 3/16	72	150	182.0	10910
PC2-CM1-1000-6	PC2-CM2-1000-6	1016	40.000	36	41	620	24 7/16	54	130	97.2	3810
PC2-CM1-1000-8	PC2-CM2-1000-8	1016	40.000	48	52	665	26 3/16	72	150	189.3	10910

THREE BOLT PIPE CLAMP WITH COMLIN MAX. TEMPERATURE 300°C

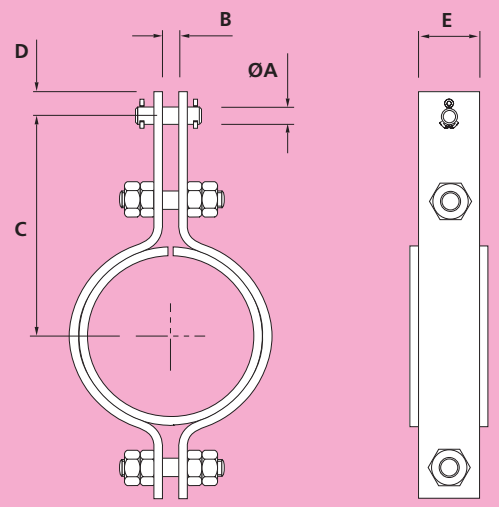

Order by Part Number, Comlin Type and Comlin Grade e.g. PC3-CM2-100-2/817/FR80
Material: Carbon Steel and Comlin. Also available in Stainless Steel.
Pipe Clamps with other Load Capacities are also available.
**** Do not exceed the Maximum Temperature for the Grade of Comlin used.***

PART NUMBER FOR COMLIN TYPE 816, 916, 818 & 918	PART NUMBER FOR COMLIN TYPE 817 &917	PIPE O/D		A	B	C		D	E	WEIGHT	*LOAD CAPACITY AT 300°C
		mm	in	mm	mm	mm	in	mm	mm	kgf	kgf
PC3-CM1-15-0	PC3-CM2-15-0	21.3	0.839	12	15	100	3 15/16	18	35	0.6	390
PC3-CM1-20-0	PC3-CM2-20-0	26.7	1.051	12	15	100	3 15/16	18	35	0.6	390
PC3-CM1-25-0	PC3-CM2-25-0	33.4	1.315	12	15	100	3 15/16	18	35	0.6	390
PC3-CM1-32-0	PC3-CM2-32-0	42.2	1.661	12	15	110	4 5/16	18	35	0.7	390
PC3-CM1-40-0	PC3-CM2-40-0	48.3	1.902	12	15	110	4 5/16	18	35	0.7	390
PC3-CM1-50-0	PC3-CM2-50-0	60.3	2.375	12	15	120	4 3/4	18	35	0.7	390
PC3-CM1-65-2	PC3-CM2-65-2	73	2.875	16	17	130	5 1/8	24	40	1.1	650
PC3-CM1-80-2	PC3-CM2-80-2	88.9	3.500	16	17	150	5 7/8	24	40	1.2	600
PC3-CM1-100-0	PC3-CM2-100-0	114.3	4.500	12	15	180	7 1/16	18	35	1.1	270
PC3-CM1-100-2	PC3-CM2-100-2	114.3	4.500	16	17	180	7 1/16	24	40	2.0	800
PC3-CM1-150-0	PC3-CM2-150-0	168.3	6.625	12	15	210	8 1/4	18	40	1.8	340
PC3-CM1-150-2	PC3-CM2-150-2	168.3	6.625	16	17	210	8 1/4	24	40	2.4	590
PC3-CM1-200-1	PC3-CM2-200-1	219.1	8.625	16	17	280	11	24	40	3.0	510
PC3-CM1-200-3	PC3-CM2-200-3	219.1	8.625	20	20	280	11	30	60	7.0	1320
PC3-CM1-250-2	PC3-CM2-250-2	273	10.750	16	17	320	12 5/8	24	45	4.9	620
PC3-CM1-250-4	PC3-CM2-250-4	273	10.750	24	25	320	12 5/8	36	65	15.0	1590
PC3-CM1-300-3	PC3-CM2-300-3	323.9	12.750	20	20	350	13 3/4	30	60	9.0	1180
PC3-CM1-300-4	PC3-CM2-300-4	323.9	12.750	24	25	350	13 3/4	36	65	16.7	1830
PC3-CM1-350-3	PC3-CM2-350-3	355.6	14.000	20	20	380	14 15/16	30	60	9.8	1100
PC3-CM1-350-5	PC3-CM2-350-5	355.6	14.000	30	29	380	14 15/16	45	90	25.8	3050
PC3-CM1-400-4	PC3-CM2-400-4	406.4	16.000	24	25	420	16 9/16	36	65	20.0	1830
PC3-CM1-400-6	PC3-CM2-400-6	406.4	16.000	36	41	420	16 9/16	54	110	35.9	3810
PC3-CM1-450-4	PC3-CM2-450-4	457.2	18.000	24	25	450	17 11/16	36	65	21.7	1830
PC3-CM1-450-6	PC3-CM2-450-6	457.2	18.000	36	41	450	17 11/16	54	110	38.7	3810
PC3-CM1-500-4	PC3-CM2-500-4	508	20.000	24	25	470	18 1/12	36	65	23.2	1750
PC3-CM1-500-7	PC3-CM2-500-7	508	20.000	42	45	470	18 1/12	63	110	53.3	5470
PC3-CM1-550-5	PC3-CM2-550-5	558.8	22.000	30	29	500	19 11/16	45	90	35.3	2510
PC3-CM1-550-7	PC3-CM2-550-7	558.8	22.000	42	45	500	19 11/16	63	130	66.9	5470
PC3-CM1-600-5	PC3-CM2-600-5	609.6	24.000	30	29	520	20 1/12	45	90	37.4	2360
PC3-CM1-600-7	PC3-CM2-600-7	609.6	24.000	42	45	520	20 1/12	63	130	70.6	5470
PC3-CM1-650-5	PC3-CM2-650-5	660.4	26.000	30	29	560	22 1/16	45	90	40.8	2340
PC3-CM1-650-7	PC3-CM2-650-7	660.4	26.000	42	45	560	22 1/16	63	130	87.0	5470
PC3-CM1-700-5	PC3-CM2-700-5	711.2	28.000	30	29	590	23 1/4	45	90	43.2	2420
PC3-CM1-700-7	PC3-CM2-700-7	711.2	28.000	42	45	590	23 1/4	63	150	91.9	5470
PC3-CM1-750-5	PC3-CM2-750-5	762	30.000	30	29	640	25 3/16	45	110	56.3	2870
PC3-CM1-750-8	PC3-CM2-750-8	762	30.000	48	52	640	25 3/16	72	150	120.4	8160
PC3-CM1-800-5	PC3-CM2-800-5	812.8	32.000	30	29	660	26	45	110	58.8	2790
PC3-CM1-800-8	PC3-CM2-800-8	812.8	32.000	48	52	660	26	72	150	125.6	7610
PC3-CM1-850-5	PC3-CM2-850-5	863.6	34.000	30	29	710	27 15/16	45	110	62.4	2690
PC3-CM1-850-8	PC3-CM2-850-8	863.6	34.000	48	52	710	27 15/16	72	150	176.4	8920
PC3-CM1-900-6	PC3-CM2-900-6	914.4	36.000	36	41	740	29 1/18	54	130	97.9	3810
PC3-CM1-900-8	PC3-CM2-900-8	914.4	36.000	48	52	740	29 1/18	72	150	184.7	8560
PC3-CM1-950-6	PC3-CM2-950-6	965	38.000	36	41	770	30 5/16	54	130	102.2	3810
PC3-CM1-950-8	PC3-CM2-950-8	965	38.000	48	52	770	30 5/16	72	150	192.7	8410
PC3-CM1-1000-6	PC3-CM2-1000-6	1016	40.000	36	41	790	31 1/8	54	130	106.0	3810
PC3-CM1-1000-8	PC3-CM2-1000-8	1016	40.000	48	52	790	31 1/8	72	150	201.8	10000

PIPE CLAMP BASE WITH COMLIN — MAX. TEMPERATURE 300°C

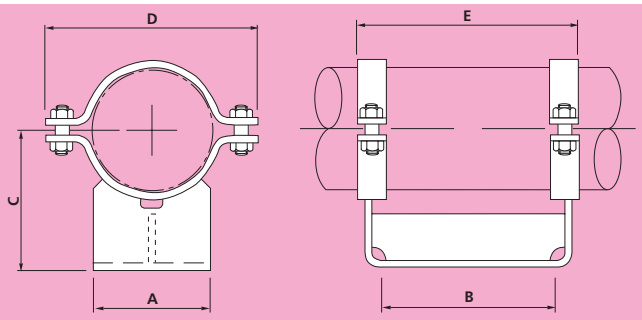

PB1

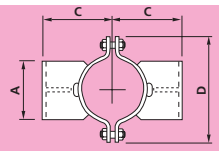

PB2

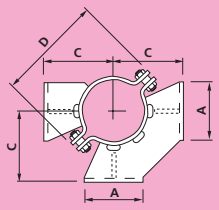

PB3

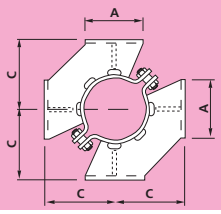

PB4

TYPE PB1 IS FOR USE AS A SLIDING BASE OR WITH SPREADER BEAMS. IF IT IS GUIDED AT THE BASE, THE LOAD CAPACITY IN THE HORIZONTAL DIRECTION IS 30% OF THE STATED VERTICAL LOAD CAPACITY.

TYPE PB2 IS FOR USE AS A GUIDE ON HORIZONTAL OR VERTICAL PIPES, OR WHEN USED WITH THE LEGS VERTICAL AS A VERTICAL RESTRAINT ON HORIZONTAL PIPES IN CASES WHERE THE VERTICAL LOAD CAN ACT UPWARDS.

TYPE PB3 IS FOR USE AS A GUIDE ON HORIZONTAL PIPES. THE STATED LOAD CAPACITY IS APPLICABLE TO BOTH VERTICAL AND LATERAL LOADINGS ACTING CONCURRENTLY.

TYPE PB4 IS A TWO WAY GUIDE WHICH CAN BE USED FOR EITHER HORIZONTAL OR VERTICAL PIPES.

Order by Part Number, Comlin Type and Comlin Grade e.g. PB1-CM1-150-4/816/FR80
Material: Carbon Steel and Comlin. Also available in Stainless Steel.
Pipe Clamp Bases with other Load Capacities are also available.
**** Do not exceed the Maximum Temperature for the Grade of Comlin used.***

PART NUMBER FOR COMLIN TYPE 816, 916, 818 & 918	PART NUMBER FOR COMLIN TYPE 817 & 917	Pipe O/D		A	B	C		D	E	Max Lagging Thickness	Weight				Load Capacity (See notes)
For Multi-Leg types, replace PB1 with PB2, PB3 or PB4		mm	in	mm	mm	mm	in	mm	mm	mm	PB1 kgf	PB2 kgf	PB3 kgf	PB4 kgf	kgf
PB1-CM1-15-1	PB1-CM2-15-1	21.3	0.839	50	150	90	3 9/16	106	185	75	1.8	3.0	4.2	5.4	360
PB1-CM1-20-1	PB1-CM2-20-1	26.7	1.051	50	150	90	3 9/16	110	185	75	1.8	3.0	4.2	5.4	360
PB1-CM1-25-1	PB1-CM2-25-1	33.4	1.315	50	150	90	3 9/16	120	185	70	1.9	3.1	4.3	5.4	360
PB1-CM1-32-1	PB1-CM2-32-1	42.2	1.661	60	150	100	3 15/16	130	185	75	2.3	3.7	5.2	6.7	360
PB1-CM1-40-1	PB1-CM2-40-1	48.3	1.902	60	150	100	3 15/16	138	185	75	2.3	3.8	5.2	6.7	360
PB1-CM1-50-2	PB1-CM2-50-2	60.3	2.375	70	150	110	4 5/16	150	203	75	2.7	4.4	6.2	7.9	530
PB1-CM1-65-2	PB1-CM2-65-2	73	2.875	70	200	110	4 5/16	166	253	70	3.1	5.2	7.2	9.3	530
PB1-CM1-80-2	PB1-CM2-80-2	88.9	3.500	100	200	160	6 5/16	182	253	115	4.6	7.9	11	15	530
PB1-CM1-90-2	PB1-CM2-90-2	101.6	4.000	100	200	160	6 5/16	196	253	105	4.7	8.0	11	15	530
PB1-CM1-100-3	PB1-CM2-100-3	114.3	4.500	100	200	170	6 11/16	208	253	110	4.8	8.2	12	15	1010
PB1-CM1-125-3	PB1-CM2-125-3	141.3	5.563	110	200	180	7 1/16	236	253	105	5.4	9.2	13	17	1010
PB1-CM1-150-4	PB1-CM2-150-4	168.3	6.625	120	200	200	7 7/8	278	264	115	9.3	15	21	27	1580
PB1-CM1-175-5	PB1-CM2-175-5	193.7	7.625	140	250	240	9 7/16	302	314	140	12	20	29	37	2280
PB1-CM1-200-3	PB1-CM2-200-3	219.1	8.625	150	250	250	9 13/16	320	308	140	9.8	16	23	29	1010
PB1-CM1-200-6	PB1-CM2-200-6	219.1	8.625	150	250	250	9 13/16	364	346	140	24	38	52	65	3650
PB1-CM1-225-3	PB1-CM2-225-3	244.5	9.625	160	250	260	10 1/4	346	308	135	11	18	25	32	1010
PB1-CM1-225-6	PB1-CM2-225-6	244.5	9.625	160	250	270	10 5/8	392	346	145	26	41	57	72	3650
PB1-CM1-250-4	PB1-CM2-250-4	273	10.750	170	250	280	11	384	314	140	16	26	36	47	1580
PB1-CM1-250-7	PB1-CM2-250-7	273	10.750	170	250	280	11	420	346	140	28	45	61	77	5340
PB1-CM1-300-4	PB1-CM2-300-4	323.9	12.750	190	300	320	12 5/8	446	369	155	22	35	49	62	1580
PB1-CM1-300-6	PB1-CM2-300-6	323.9	12.750	190	300	320	12 5/8	474	396	155	35	56	76	97	3650
PB1-CM1-300-8	PB1-CM2-300-8	323.9	12.750	190	300	320	12 5/8	526	410	155	54	80	106	133	7400
PB1-CM1-350-6	PB1-CM2-350-6	355.6	14.000	210	300	340	13 3/8	506	396	160	39	62	86	109	3650
PB1-CM1-350-7	PB1-CM2-350-7	355.6	14.000	210	300	340	13 3/8	506	396	160	39	62	86	109	5340
PB1-CM1-350-9	PB1-CM2-350-9	355.6	14.000	210	300	340	13 3/8	560	425	160	70	111	152	193	9650
PB1-CM1-400-6	PB1-CM2-400-6	406.4	16.000	240	300	360	14 3/16	570	391	155	47	74	101	128	3650
PB1-CM1-400-8	PB1-CM2-400-8	406.4	16.000	240	300	360	14 3/16	610	410	155	67	101	136	170	7400
PB1-CM1-400-10	PB1-CM2-400-10	406.4	16.000	240	300	370	14 9/16	638	465	165	109	171	233	295	13350
PB1-CM1-450-6	PB1-CM2-450-6	457.2	18.000	270	300	390	15 3/8	624	391	160	53	85	116	147	3650
PB1-CM1-450-9	PB1-CM2-450-9	457.2	18.000	270	300	390	15 3/8	664	425	160	91	145	200	255	9650

PIPE CLAMP BASE WITH COMLIN — MAX. TEMPERATURE 300°C

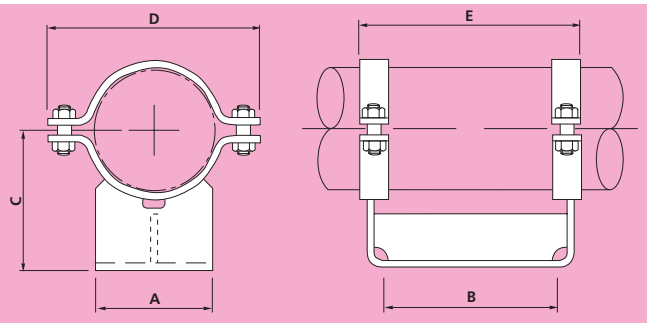

PB1

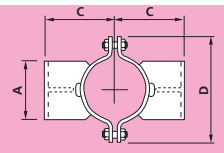

PB2

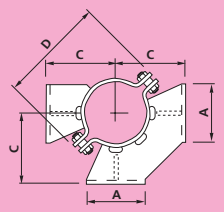

PB3

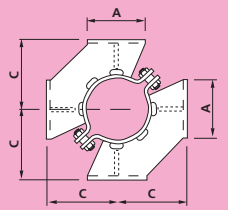

PB4

TYPE PB1 IS FOR USE AS A SLIDING BASE OR WITH SPREADER BEAMS. IF IT IS GUIDED AT THE BASE, THE LOAD CAPACITY IN THE HORIZONTAL DIRECTION IS 30% OF THE STATED VERTICAL LOAD CAPACITY.

TYPE PB2 IS FOR USE AS A GUIDE ON HORIZONTAL OR VERTICAL PIPES, OR WHEN USED WITH THE LEGS VERTICAL AS A VERTICAL RESTRAINT ON HORIZONTAL PIPES IN CASES WHERE THE VERTICAL LOAD CAN ACT UPWARDS.

TYPE PB3 IS FOR USE AS A GUIDE ON HORIZONTAL PIPES. THE STATED LOAD CAPACITY IS APPLICABLE TO BOTH VERTICAL AND LATERAL LOADINGS ACTING CONCURRENTLY.

TYPE PB4 IS A TWO WAY GUIDE WHICH CAN BE USED FOR EITHER HORIZONTAL OR VERTICAL PIPES.

Order by Part Number, Comlin Type and Comlin Grade e.g. PBI-CM1-150-4/816/FR80
Material: Carbon Steel and Comlin. Also available in Stainless Steel.
Pipe Clamp Bases with other Load Capacities are also available.
**** Do not exceed the Maximum Temperature for the Grade of Comlin used.***

PART NUMBER FOR COMLIN TYPE 816, 916, 818 & 918	PART NUMBER FOR COMLIN TYPE 817 & 917	Pipe O/D		A	B	C		D	E	Max Lagging Thickness	Weight				Load Capacity (See notes)
For Multi-Leg types, replace PB1 with PB2, PB3 or PB4		mm	in	mm	mm	mm	in	mm	mm	mm	PB1 kgf	PB2 kgf	PB3 kgf	PB4 kgf	kgf
PB1-CM1-450-11	PB1-CM2-450-11	457.2	18.000	270	300	400	15 3/4	716	500	170	152	241	329	418	18000
PB1-CM1-500-6	PB1-CM2-500-6	508	20.000	300	400	440	17 5/16	694	491	185	67	110	152	195	3650
PB1-CM1-500-9	PB1-CM2-500-9	508	20.000	300	400	450	17 11/16	716	525	195	114	189	263	338	9650
PB1-CM1-500-12	PB1-CM2-500-12	508	20.000	300	400	460	18 1/8	770	600	205	189	308	427	546	23025
PB1-CM1-550-6	PB1-CM2-550-6	558.8	22.000	330	400	460	18 1/8	746	491	180	74	121	168	216	3650
PB1-CM1-550-8	PB1-CM2-550-8	558.8	22.000	330	400	470	18 1/2	768	510	190	103	164	224	285	7400
PB1-CM1-550-10	PB1-CM2-550-10	558.8	22.000	330	400	480	18 7/8	794	565	200	168	275	383	490	13350
PB1-CM1-550-13	PB1-CM2-550-13	558.8	22.000	330	400	490	19 5/16	872	650	210	301	488	675	862	28125
PB1-CM1-600-6	PB1-CM2-600-6	609.6	24.000	360	400	490	19 5/16	820	501	185	98	151	203	256	3650
PB1-CM1-600-8	PB1-CM2-600-8	609.6	24.000	360	400	490	19 5/16	820	510	185	112	179	246	313	7400
PB1-CM1-600-10	PB1-CM2-600-10	609.6	24.000	360	400	500	19 11/16	846	565	195	183	301	420	538	13350
PB1-CM1-600-13	PB1-CM2-600-13	609.6	24.000	360	400	520	20 1/2	924	650	215	330	538	745	953	28125
PB1-CM1-650-6	PB1-CM2-650-6	660.4	26.000	390	400	540	21 1/4	872	501	205	109	168	228	288	3650
PB1-CM1-650-8	PB1-CM2-650-8	660.4	26.000	390	400	540	21 1/4	892	510	205	125	201	277	353	7400
PB1-CM1-650-10	PB1-CM2-650-10	660.4	26.000	390	400	550	21 5/8	898	565	215	203	337	471	605	13350
PB1-CM1-650-13	PB1-CM2-650-13	660.4	26.000	390	400	570	22 7/16	982	670	235	386	619	853	1087	28125
PB1-CM1-700-6	PB1-CM2-700-6	711.2	28.000	420	500	560	22 1/16	924	601	200	125	198	271	343	3650
PB1-CM1-700-8	PB1-CM2-700-8	711.2	28.000	420	500	570	22 7/16	942	610	210	146	239	332	426	7400
PB1-CM1-700-10	PB1-CM2-700-10	711.2	28.000	420	500	580	22 13/16	980	665	220	239	403	566	730	13350
PB1-CM1-700-13	PB1-CM2-700-13	711.2	28.000	420	500	590	23 1/4	1036	770	230	442	722	1002	1281	28125
PB1-CM1-750-6	PB1-CM2-750-6	762	30.000	450	500	590	23 1/4	976	601	205	135	214	294	373	3650
PB1-CM1-750-8	PB1-CM2-750-8	762	30.000	450	500	590	23 1/4	996	610	205	157	257	358	458	7400
PB1-CM1-750-10	PB1-CM2-750-10	762	30.000	450	500	600	23 5/8	1030	685	215	274	451	627	804	13350
PB1-CM1-750-13	PB1-CM2-750-13	762	30.000	450	500	620	24 7/16	1086	770	235	476	781	1086	1390	28125
PB1-CM1-800-6	PB1-CM2-800-6	812.8	32.000	480	500	610	24	1026	601	200	144	230	315	400	3650
PB1-CM1-800-8	PB1-CM2-800-8	812.8	32.000	480	500	620	24 7/16	1046	610	210	169	278	387	496	7400
PB1-CM1-800-10	PB1-CM2-800-10	812.8	32.000	480	500	630	24 13/16	1084	685	220	295	486	678	869	13350
PB1-CM1-800-13	PB1-CM2-800-13	812.8	32.000	480	500	640	25 3/16	1140	770	230	508	835	1162	1490	28125
PB1-CM1-850-6	PB1-CM2-850-6	863.6	34.000	510	500	640	25 3/16	1078	601	205	155	247	339	431	3650
PB1-CM1-850-8	PB1-CM2-850-8	863.6	34.000	510	500	640	25 3/16	1098	610	205	180	297	414	530	7400

PIPE CLAMP BASE WITH COMLIN — MAX. TEMPERATURE 300°C

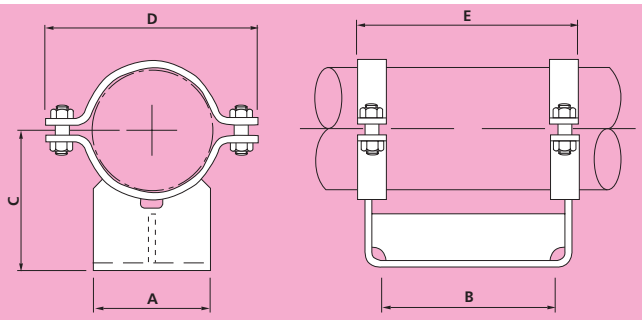

PB1

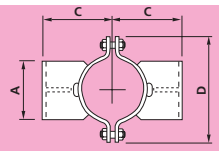

PB2

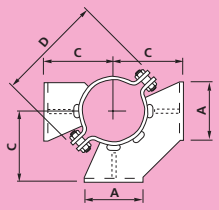

PB3

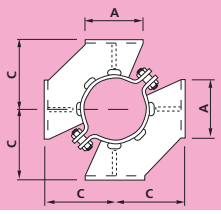

PB4

TYPE PB1 IS FOR USE AS A SLIDING BASE OR WITH SPREADER BEAMS. IF IT IS GUIDED AT THE BASE, THE LOAD CAPACITY IN THE HORIZONTAL DIRECTION IS 30% OF THE STATED VERTICAL LOAD CAPACITY.

TYPE PB2 IS FOR USE AS A GUIDE ON HORIZONTAL OR VERTICAL PIPES, OR WHEN USED WITH THE LEGS VERTICAL AS A VERTICAL RESTRAINT ON HORIZONTAL PIPES IN CASES WHERE THE VERTICAL LOAD CAN ACT UPWARDS.

TYPE PB3 IS FOR USE AS A GUIDE ON HORIZONTAL PIPES. THE STATED LOAD CAPACITY IS APPLICABLE TO BOTH VERTICAL AND LATERAL LOADINGS ACTING CONCURRENTLY.

TYPE PB4 IS A TWO WAY GUIDE WHICH CAN BE USED FOR EITHER HORIZONTAL OR VERTICAL PIPES.

Order by Part Number, Comlin Type and Comlin Grade e.g. PBI-CM1-150-4/816/FR80
Material: Carbon Steel and Comlin. Also available in Stainless Steel.
Pipe Clamp Bases with other Load Capacities are also available.
**** Do not exceed the Maximum Temperature for the Grade of Comlin used.***

PART NUMBER FOR COMLIN TYPE 816, 916, 818 & 918	PART NUMBER FOR COMLIN TYPE 817 & 917	Pipe O/D		A	B	C		D	E	Max Lagging Thickness	Weight				Load Capacity (See notes)
For Multi-Leg types, replace PB1 with PB2, PB3 or PB4		mm	in	mm	mm	mm	in	mm	mm	mm	PB1 kgf	PB2 kgf	PB3 kgf	PB4 kgf	kgf
PB1-CM1-850-10	PB1-CM2-850-10	863.6	34.000	510	500	650	25 9/16	1134	685	215	314	519	724	929	13350
PB1-CM1-850-13	PB1-CM2-850-13	863.6	34.000	510	500	670	26 3/8	1212	770	235	583	935	1288	1640	28125
PB1-CM1-900-6	PB1-CM2-900-6	914.4	36.000	540	600	670	26 3/8	1128	701	210	175	285	394	504	3650
PB1-CM1-900-8	PB1-CM2-900-8	914.4	36.000	540	600	670	26 3/8	1156	735	210	231	369	507	646	7400
PB1-CM1-900-10	PB1-CM2-900-10	914.4	36.000	540	600	680	26 3/4	1186	785	220	356	598	840	1082	13350
PB1-CM1-900-13	PB1-CM2-900-13	914.4	36.000	540	600	690	27 3/16	1294	870	230	655	1065	1474	1884	28125
PB1-CM1-950-6	PB1-CM2-950-6	965.2	38.000	570	600	690	27 3/16	1182	701	205	185	302	418	535	3650
PB1-CM1-950-8	PB1-CM2-950-8	965.2	38.000	570	600	690	27 3/16	1206	735	205	244	391	538	685	7400
PB1-CM1-950-10	PB1-CM2-950-10	965.2	38.000	570	600	700	27 9/16	1236	785	215	377	634	891	1148	13350
PB1-CM1-950-13	PB1-CM2-950-13	965.2	38.000	570	600	720	28 3/8	1346	870	235	696	1134	1573	2011	28125
PB1-CM1-1000-6	PB1-CM2-1000-6	1016	40.000	600	600	720	28 3/8	1234	701	210	197	321	446	570	3650
PB1-CM1-1000-8	PB1-CM2-1000-8	1016	40.000	600	600	720	28 3/8	1260	735	210	259	416	573	730	7400
PB1-CM1-1000-10	PB1-CM2-1000-10	1016	40.000	600	600	730	28 3/4	1312	785	220	432	706	980	1254	13350
PB1-CM1-1000-13	PB1-CM2-1000-13	1016	40.000	600	600	740	29 1/8	1398	870	230	733	1197	1661	2125	28125

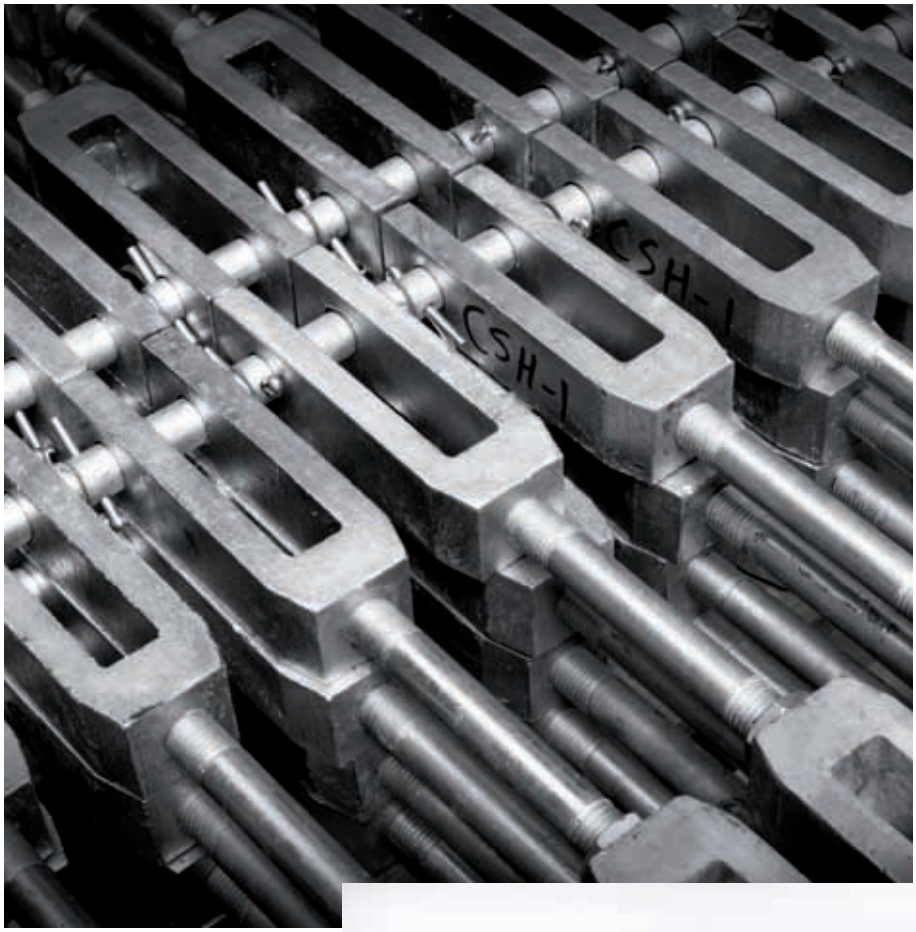

Part of a large contract for a reformer furnace project

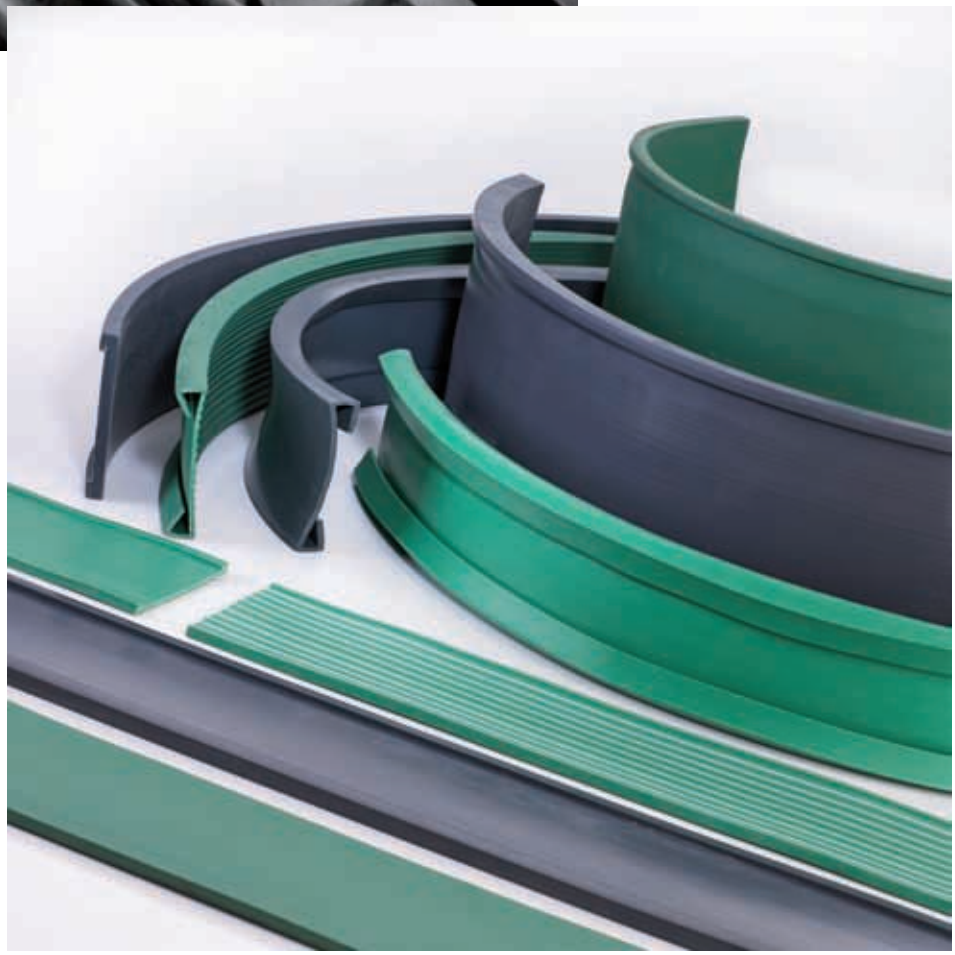

WHAT SLIDE BEARINGS DO

When structures get hot, they expand — and this expansion has to be accommodated within the design of the structure.
For example, bridges and buildings expand and contract as a result of changes in ambient temperature and pipelines expand or contract when the temperature of the fluid they are transporting changes.
Failure to allow such items to expand can produce in them unacceptably high stresses and may also overload the equipment or structure to which they are attached.
An extremely effective way of accommodating such expansion is to allow one item to move in relation to another — and this can easily be achieved by using slide bearings to separate the expanding item from the supporting structure.
However, it is important that the bearing is designed so that the frictional force between the item and the structure is kept to a minimum, to prevent the development of high loads and stresses.

WHY USE EASISLIDE BEARINGS?

- They incorporate PTFE or other low friction materials.
- The bearings are designed to achieve optimum performance, by careful specification of the bearing pad dimensions to achieve the ideal compressive stress.
- Capable of operating completely dry, they require no lubrication.
- Able to withstand a wide range of environmental conditions — operating at temperatures from minus 200°C to plus 400°C and are resistant to a wide range of organic and inorganic chemicals.
- Can tolerate some embedment of small particles in the bearing pad without causing failure.
- Compact design — which means they often fit into areas unsuitable for other types of bearing.
- Designed for easy on-site installation.
- Long and maintenance free life.
- Already operating successfully in a wide range of installations worldwide.

EASISLIDE LOW FRICTION BEARINGS

Pipe Supports Group offers a comprehensive range of slide bearings suitable for many industrial applications. We supply bearings in a range of materials to standard designs and we also design and supply non-standard bearings to suit particular applications.

PTFE/STAINLESS STEEL BEARINGS

Polished[1] stainless steel upper face and PTFE lower face both attached to carbon steel backing plates.

PTFE sliding on polished[1] stainless steel gives optimum low friction performance, with reduced frictional loadings permitting more efficient structural design. For bearing pressures above 1MPa, coefficient of friction values will typically be <0.05 for virgin PTFE and <0.07 for filled grades. Coefficient of friction reduces with increasing bearing pressure.
On PTFE/stainless steel bearings, the stainless steel surface is made larger than the PTFE by an amount exceeding the lateral movements. This means that the PTFE surface is always in full contact with the stainless steel, ensuring no increase in bearing pressure or damage to the PTFE surface caused by the edge of the harder stainless steel plate pressing into the PTFE.
It is usual to install PTFE/stainless steel bearings with the larger stainless steel plate uppermost so that dust cannot settle on the larger plate, though design considerations may necessitate installation with the PTFE at the top.
PTFE does tolerate some embedment of small particles without significant effect on performance.

PTFE/STAINLESS STEEL BEARINGS — RECOMMENDED MAXIMUM BEARING PRESSURE

PTFE will suffer from creep under high loading, this effect increasing at higher temperatures. Pipe Support Group's maximum recommended bearing pressures are shown on the following graph.

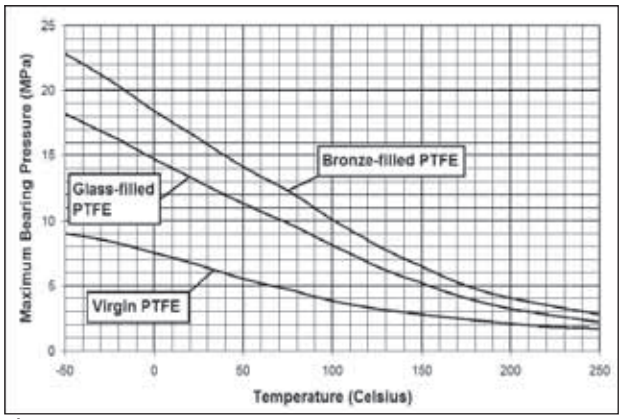

Figure 1

For PTFE bearings where the PTFE is affixed to the backing plate solely by bonding, a maximum PTFE service temperature of 120°C is recommended. Where the PTFE is contained in a machined recess in the backing plate, a maximum temperature of 250°C is applicable. Note that if EasiSlide bearings are fitted below pipe shoes on insulated pipework, there will be a temperature drop through the shoe and insulation; the bearing will not be at the same temperature as the pipe.

PTFE/STAINLESS STEEL BEARINGS — STANDARD BEARINGS

For the standard designs, the bottom plate is square. The top plate may be square or rectangular, depending on required movement in the co-ordinate directions. For efficient selection of travel range, the relative positions of top and bottom plates can be offset on installation. Backing plates are carbon steel as standard but can be supplied in stainless steel if requested.

Travel Range 1 = +/- 12.5mm Movement
Travel Range 2 = +/- 25mm Movement
Travel Range 3 = +/- 37.5mm Movement

Bearings can be supplied with different thickness "C" if requested. Care should be taken that the backing structure has adequate strength and rigidity.

STANDARD BEARINGS WITH BONDED PTFE

ES07 BEARING
Bonded Virgin PTFE/Stainless Steel

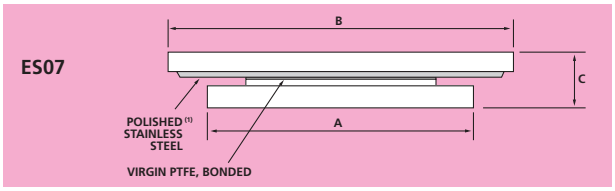

Size	Recommended Loading at 25°C (kg)(2) (4)		A (Sq.)	C	B (mm)		
					Movement		
	Min	Max	mm	mm	Range 1	Range 2	Range 3
250	50	250	40	15	65	90	115
500	100	500	55	21	75	100	125
1000	200	1000	70	25	85	110	135
2000	400	2000	100	29	105	130	155
4000	800	4000	125	35	125	150	175
8000	1600	8000	180	45	165	190	215
16000	3200	16000	230	55	205	230	255
32000	6400	32000	300	55	275	300	325
64000	12800	64000	400	55	375	400	425

ES07DS BEARING
Bonded Virgin PTFE/Stainless Steel with Dust Seal

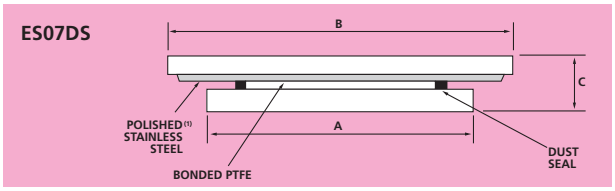

Size	Recommended Loading at 25°C (kg)(2) (4)		A (Sq.)	C	B (mm)		
					Movement		
	Min	Max	mm	mm	Range 1	Range 2	Range 3
250	50	250	60	15	85	110	135
500	100	500	75	21	95	120	145
1000	200	1000	90	25	105	130	155
2000	400	2000	120	29	125	150	175
4000	800	4000	145	35	145	170	195
8000	1600	8000	200	45	185	210	235
16000	3200	16000	260	55	235	260	285
32000	6400	32000	330	55	305	330	355
64000	12800	64000	430	55	405	430	455

ES08 BEARING
Bonded Glass-Filled PTFE/Stainless Steel

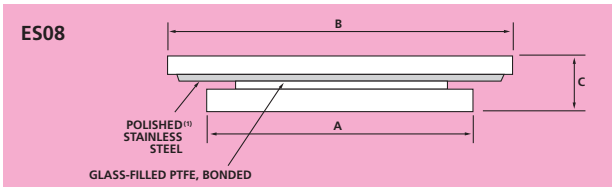

Size	Recommended Loading at 25°C (kg) (2) (4)		A (Sq.)	C	B (mm)		
					Movement		
	Min	Max	mm	mm	Range 1	Range 2	Range 3
480	50	480	40	15	65	90	115
960	100	960	55	21	75	100	125
1900	200	1900	70	25	85	110	135
3800	400	3800	100	29	105	130	155
7600	800	7600	125	35	125	150	175
15000	1600	15000	180	45	165	190	215
30000	3200	30000	230	55	205	230	255
60000	6400	60000	300	55	275	300	325
120000	12800	120000	400	55	375	400	425

ES09 BEARING
Bonded Bronze-Filled PTFE/Stainless Steel

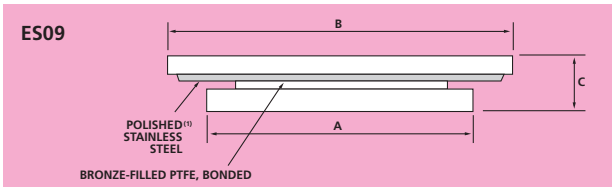

Size	Recommended Loading at 25°C (kg) (2) (4)		A (Sq.)	C	B (mm)		
					Movement		
	Min	Max	mm	mm	Range 1	Range 2	Range 3
600	50	600	40	15	65	90	115
1200	100	1200	55	21	75	100	125
2400	200	2400	70	25	85	110	135
4800	400	4800	100	29	105	130	155
9600	800	9600	125	35	125	150	175
19000	1600	19000	180	45	165	190	215
38000	3200	38000	230	55	205	230	255
76000	6400	76000	300	55	275	300	325
152000	12800	152000	400	55	375	400	425

STANDARD BEARINGS WITH PTFE IN A MACHINED RECESS

ES10 BEARING
Virgin PTFE in Recessed Backing Plate/Stainless Steel

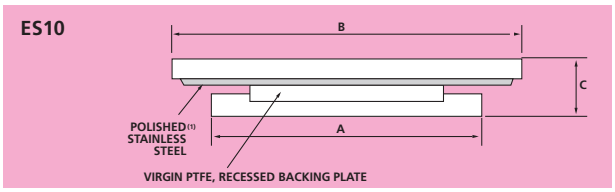

Size	Recommended Loading at 25°C (kg) (3) (4)		A (Sq.)	C	B (mm)		
					Movement		
	Min	Max	mm	mm	Range 1	Range 2	Range 3
250	50	250	40	18	65	90	15
500	100	500	55	23	75	100	125
1000	200	100	70	27	85	110	135
2000	400	2000	100	32	105	130	155
4000	800	4000	125	40	125	150	175
8000	1600	8000	180	50	165	190	215
1600	3200	16000	230	60	205	230	255
32000	6400	32000	300	60	275	300	325
64000	12800	64000	400	60	375	400	425

ES11 BEARING
Glass-Filled PTFE in Recessed Backing Plate/Stainless Steel

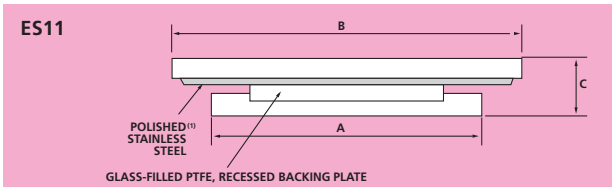

Size	Recommended Loading at 25°C (kg) (3) (4)		A (Sq.)	C	B (mm)		
					Movement		
	Min	Max	mm	mm	Range 1	Range 2	Range 3
480	50	480	40	18	65	90	115
960	100	960	55	23	75	100	125
1900	200	1900	70	27	85	110	135
3800	400	3800	100	32	105	130	155
7600	800	7600	125	40	125	150	175
15000	1600	15000	180	50	165	190	215
30000	3200	30000	230	60	205	230	255
60000	6400	60000	300	60	275	300	325
120000	12800	120000	400	60	375	400	425

ES12 BEARING
Bronze-Filled PTFE in Recessed Backing Plate/Stainless Steel

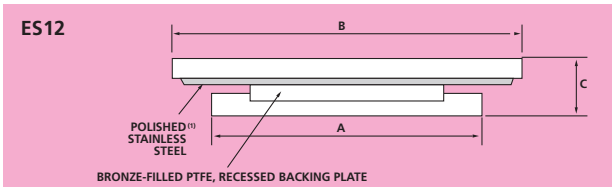

Size	Recommended Loading at 25°C (kg) (3) (4)		A (Sq.)	C	B (mm)		
					Movement		
	Min	Max	mm	mm	Range 1	Range 2	Range 3
600	50	600	40	18	65	90	115
1200	100	1200	55	23	75	100	125
2400	200	2400	70	27	85	110	135
4800	400	4800	100	32	105	130	155
9600	800	9600	125	40	125	150	175
19000	1600	19000	180	50	165	190	215
38000	3200	38000	230	60	205	230	255
76000	6400	76000	300	60	275	300	325
152000	12800	152000	400	60	375	400	425

Notes

(1) Polished to a surface finish according EN10088-2 class 2B (Equivalent to ASTM A480 No.2B)
(2) Recommended for use up to a maximum temperature of 120°C
(3) Recommended for use up to a maximum temperature of 250°C
(4) For temperatures greater than 25°C, reduce the maximum loading as per Figure 1

Typical Designation

ES08-15000 – RANGE 1 X RANGE 3

PTFE Bearings – Applications and Non-Standard Designs

Non-Standard EasiSlide Bearings on Cym Dyli HEP Station, Gwynedd, Wales.

Use with Pipe shoes

ES07 to ES12 Slide Bearings are compatible with pipe clamp bases Types PB1-PB4

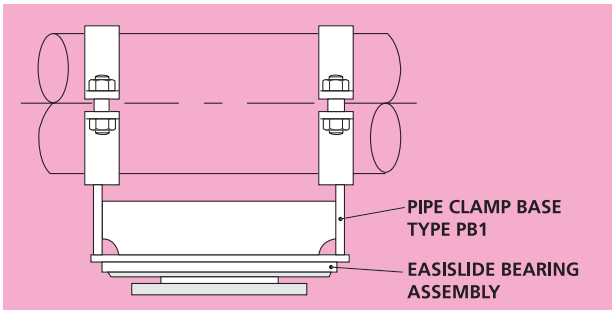

Use with Load-Bearing Thermal Insulation

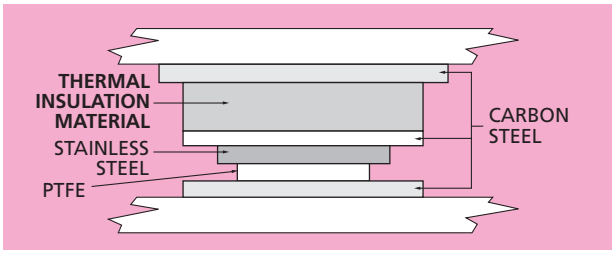

For high temperature application, when using PTFE bearings, it is necessary to use load bearing thermal insulation to reduce the temperature at the bearing face. This is an alternative to using high temperature slide bearings – see next page.

Design for Large Movement

We can supply non-standard designs of types ES07 to ES12 to allow for movements greater than Range 3 (+/-37.5mm).

For pipework applications with very large horizontal movements, the standard design of PTFE/stainless steel bearing with the large upper plate may not be practical. Large lateral movement could cause the pipe shoe to twist around the pipe, or a twisting moment can be applied to the pipe which is also undesirable. In these circumstances, it may be preferable to install the bearing with the smaller PTFE-bearing plate at the top. PTFE on PTFE designs with overlapping strips of PTFE can also be considered. Note that an increased coefficient of friction will apply for PTFE-on-PTFE bearings and a lower bearing pressure should be used.

HIGH TEMPERATURE SLIDE BEARINGS

STANDARD DESIGN – ES13

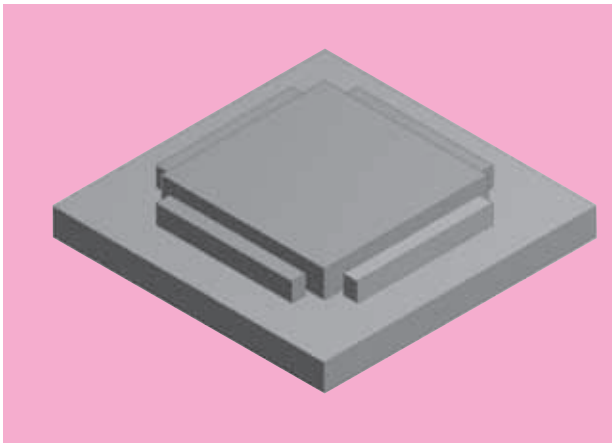

ES13 Lower Plate

The ES13 standard high temperature bearing uses a Grade PSG03 graphite pad positively located on the lower plate. The upper plate comprises a polished[1] stainless steel plate welded to a backing plate. The size of the stainless steel plate is such that the graphite pad is always in full contact. The bottom plate is square. The top plate may be square or rectangular, depending on required movement in the co-ordinate directions. For efficient selection of travel range, the relative positions of top and bottom plates can be offset on installation. Backing plates are carbon steel as standard but can be supplied in stainless or alloy steel if requested.

The standard ES13 slide bearing is designed for a maximum bearing face temperature of 400°C (752°F). For conventional high temperature piping installations using pipe clamp bases types PB1 to PB4, the temperature drop through the clamp base should result in a bearing face temperature less than 400°C.

For ES13 bearings, a coefficient of friction of approximately 0.15 should be expected.

ES13 BEARING
Lower Plate with Graphite Pad/Polished[1] Stainless Steel Upper Plate

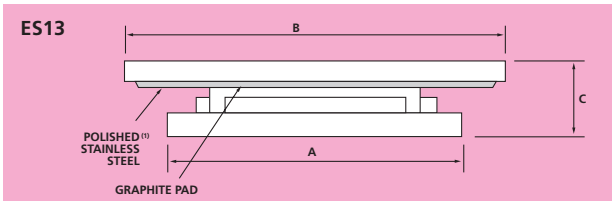

Size	Recommended Max. Loading (at 400°C)	A (Sq.)	C	B (mm)		
				Movement		
	kg	mm	mm	Range 1	Range 2	Range 3
2200	2200	75	33	75	100	125
3500	3500	85	37	85	110	135
5000	5000	95	43	95	120	145
9000	9000	115	53	115	140	165
14000	14000	135	53	135	160	185
20000	20000	155	63	155	180	205
27000	27000	175	63	175	200	225
36000	36000	195	63	195	220	245
45000	45000	215	63	215	240	265
56000	56000	235	63	235	260	285

Travel Range 1 = +/- 12.5mm Movement
Travel Range 2 = +/- 25mm Movement
Travel Range 3 = +/- 37.5mm Movement
Bearings can be supplied with different thickness "C"

if requested. Care should be taken that the backing structure has adequate strength and rigidity.

Notes

(1) Polished to a surface finish according EN10088-2 class 2B (Equivalent to ASTM A480 No.2B)

Typical Designation

ES13-9000 – RANGE 1 X RANGE 2

Use with Pipe shoes

ES13 Slide Bearings are compatible with pipe clamp bases Types PB1-PB4

Design for Large Movement

We can supply non-standard designs of type ES13 to allow for movements greater than Range 3 (+/-37.5mm).

High Temperature Slide Bearings — Non-Standard designs

Pipe Supports Group design and supply high temperature slide bearings to customer requirements.

Available Materials include:

- Leaded Bronze
- Lubricated Manganese Bronze
- Graphite-lubricated Cast Iron

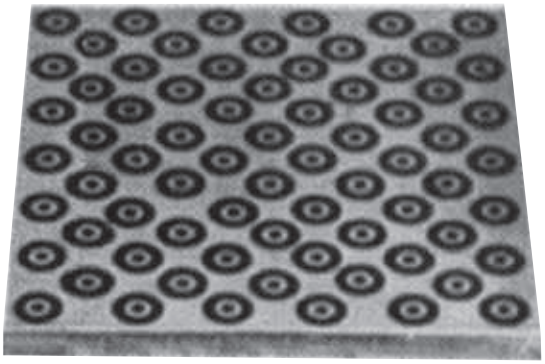

Lubricated Bronze Bearing Pad

Rigid Struts

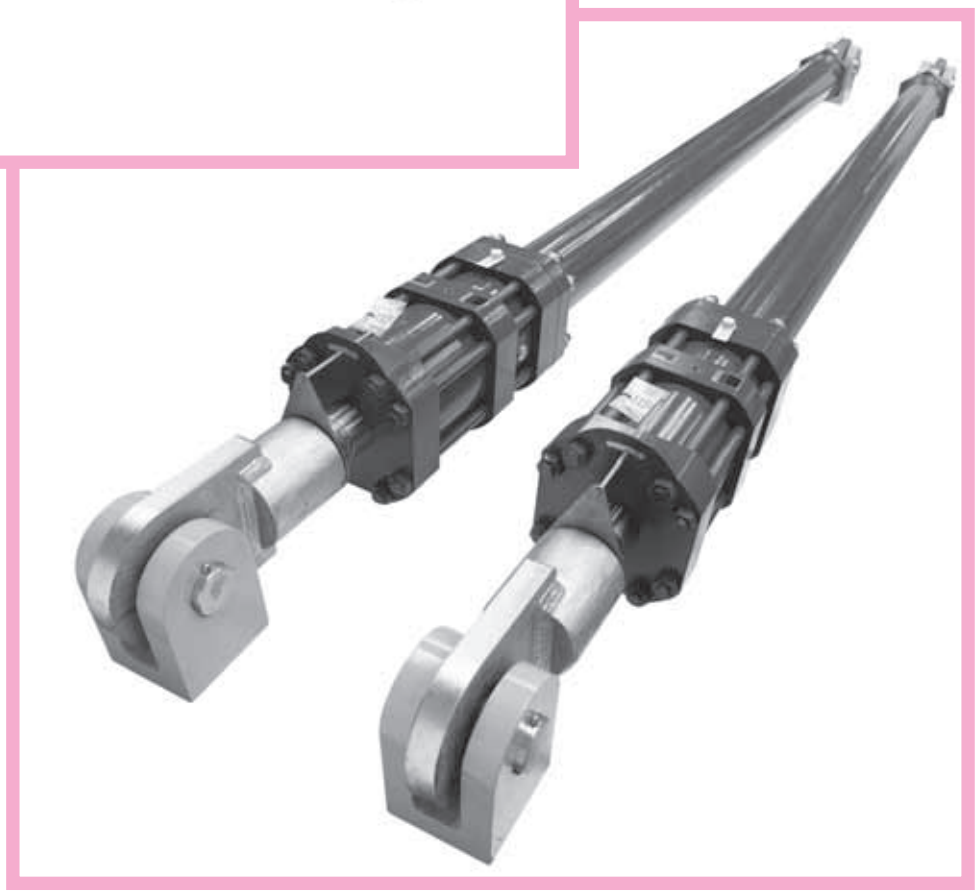

Hydraulic Snubbers

Pipework systems which are subject to purely static loading are generally supported on single acting vertical supports such as a hanger rod and pipe clamp or sliding base and, if the pipework is subject to change in temperature, some or all of these vertical supports may be spring supports, either variable or constant effort type. A supporting arrangement such as this is generally not suitable for pipework subject to dynamic loading.

Dynamic loading may occur for a number of reasons. Unsteady flow, such as that caused by valve closure, produces dynamic forces and is referred to as water hammer. In an earthquake, a piping system is also subject to dynamic forces.

Where the pipework system is subject to dynamic forces, vibration of the pipework will occur. This may be injurious to the pipework and connected equipment and plant. Pipework systems which are supported on single acting vertical restraints and springs with no lateral restraint will have low natural frequencies of vibration and will experience large dynamic deflections when subject to vibration; this will generally be unacceptable. Pipework stress analysis either by response spectrum or time history analysis can be used to show the need for dynamic restraints.

In pipework systems which are subject to dynamic loading, it may be necessary to use rigid struts, which act in both directions, rather than hanger rods, which only support downward acting loads. Rigid struts are also used to provide lateral restraint where this is required. Snubbers are used where dynamic restraint is required, but the pipe has to be allowed to move thermally.

RIGID STRUT — FIG. 511

Pipe Supports Group manufacture a comprehensive range of rigid struts covering loading up to more than 90 tonnes with lengths up to 6 metres (12'8"). The struts are designed for ease of use and to provide a cost-effective dynamic restraint. Rigid struts use spherical bearings to permit angulation and they provide length adjustment of +/- 100mm (4") by means of right and left hand threaded rod ends so that the adjustment can be made without disconnection. Maximum loadings are tabulated in kilograms, Newtons and pounds and weights and axial stiffnesses are also given. Having selected the size of strut that you need, the numbering system used makes the selection of the associated welding clevis and clamp a simple matter.

WELDING CLEVIS — FIG. 512

The welding clevis provides means of attachment of rigid struts and snubbers to steelwork. The welding clevis is designed to provide +/- 5 degrees and +/- 90 degrees of angulation as shown below.

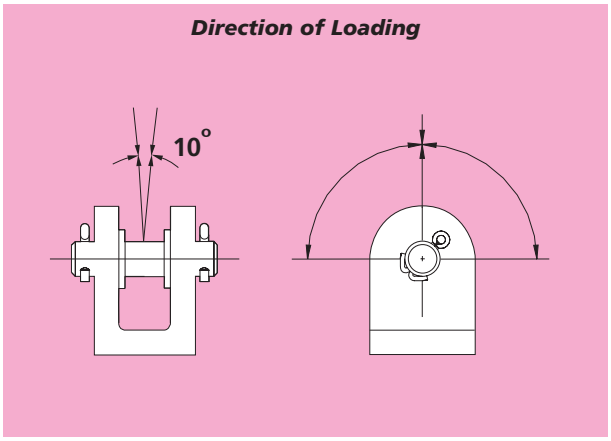

SNUBBER — FIG. 516 AND FIG. 517

Pipe Supports Group's range of hydraulic snubbers cover loadings up to more than 85 tonnes with cylinder stroke up to 20" (508mm). The snubbers are to a well proven design; the numbering system and sizes of end fittings are compatible with the other dynamic restraint components. The Fig. 517 Adjustable Strut Snubber incorporates a tubular extension with a length adjustment of +/- 50 mm. The Fig. 516 Short Snubber is for use where available space is limited; there is no adjustment of length other than by moving the piston.

The hydraulic snubber is a standard 3000 psi hydraulic cylinder with a built-in fluid reservoir. The fluid is ported via the end blocks to the external valve block. The valve block contains two regulating valves with bleed grooves. The connection of the manifold to the reservoir and the valve block to the manifold is by use of "O" ring seals.

In operation, normal thermal expansion of the pipework causes the piston rod to extend or retract at a velocity less than the lock-up velocity. In this situation the snubber is inactive and the device has minimal effect on the behaviour of the pipework. In a dynamic situation, shock or vibration forces which cause the rate of displacement of the piston to exceed the lock-up velocity will cause the regulating valves to close and the snubber limits the velocity. The resistive capacity of the unit transfers the force to the structure and reduces the possibility of overstressing the pipe or associated equipment connections.

The function of the bleed grooves is to control the velocity after lock-up. For prolonged thrust, the bleed grooves are eliminated and the unit becomes a rigid strut during lock-up.

CLAMPS FOR RIGID STRUTS AND SNUBBERS FIG. 513, FIG. 514 AND FIG. 515

Pipe Supports Group offer a very comprehensive range of clamps for rigid struts and Snubbers. The Fig. 513 clamp is a single plate stiff clamp incorporating a sheathed U-bolt. The Fig. 514 clamp is a double plate stiff clamp, again incorporating a single sheathed U-bolt and having the axis of the connecting pin parallel to

the axis of the pipe. The Fig. 515 clamp is a conventional type pipe clamp. It should be noted that when using type 515 clamps, because of the tolerance on pipe outside diameter, it may be necessary to use shim stock between the pipe and clamp to grip the pipe tightly and provide good dynamic restraint.

All three types of clamps use close tolerance load pins and are designed to operate within a 10 degree cone of load application.

The clamps are designed in four temperature ranges to suit maximum design temperatures of 400 °C (752 °F), 490 °C (914 °F), 530 °C (986 °F), and 570 °C (1058 °F). Maximum loadings and pin sizes are compatible with those for the struts and snubbers.

SELECTION — RIGID STRUTS

Rigid struts are selected on the basis of maximum applied load and length between pin centres. The loading shown at 1 metre (39.4") pin centres is the maximum applicable for the size of strut in question. Loadings at longer lengths are also shown at 1 metre intervals. For intermediate lengths, maximum loadings can be derived by interpolation. Do not specify strut sizes where no loading is shown for the required length. If a minimum stiffness of rigid strut is required, make reference to the tabulation of stiffnesses. The lengths of rigid struts should be such that the maximum angulation is not exceeded, the attachment can be offset on installation if necessary to help achieve this.

SELECTION — SNUBBERS

Determine the minimum required stroke by taking the anticipated design movement and adding an allowance for excess travel. This allowance should normally be at least 20% of the anticipated design movement. Then select a snubber where the cylinder stroke is greater than or equal to the minimum required stroke and the applied loadings in tension and compression are less than the allowable maximum loadings in tension and compression for the size and length of snubber as shown in the catalogue. For intermediate lengths, allowable compressive loadings may be determined by interpolation. The length of the snubber must be such that the maximum angulation is not exceeded. To calculate the required closed centres for the snubber, use the following formulae:

Closed Centres = Installed Centres — X

where

X = (Stroke - Design Movement in Extension) / 2

or

X = (Stroke + Design Movement in Compression) / 2

This method will result in the spare travel being distributed evenly on either side of the design movement.

SELECTION — WELDING CLEVIS

Welding clevises are selected to suit the size of strut or snubber: e.g. for rigid strut Fig. 511-4 or snubber Fig. 517-4-10, use welding clevis Fig. 512-4.

SELECTION — PIPE CLAMP FOR RIGID STRUT AND SNUBBER

1) Find the page relating to the appropriate pipe size.

2) Find the section relating to clamp maximum temperature just greater than or equal to the pipework temperature.

3) Look at the clamp part numbers; the number after the pipe size is the clamp load designation which corresponds to the strut or snubber size; e.g. for 150 NB pipe at 500 °C and using rigid strut size 3, choice of clamps is:

Fig. 513-150-3-530

Fig. 514-150-3-530

Fig. 515-150-3-530

You may select any of the above 3 clamps.

In most circumstances, Fig. 515 clamps will be the least expensive and Fig. 514 clamps the most expensive.

STANDARD FEATURES — RIGID STRUT

1) A choice of eleven standard sizes.

2) Length adjustment of +/- 100mm without disconnection.

3) Sight holes to check thread engagement.

4) Painted finish — one coat of high-build acrylic primer with threaded parts electro-zinc plated.

5) +/- 5 degrees permissible angulation.

OPTIONAL FEATURES — RIGID STRUT

1) Painted in accordance with customer's own specification. Threaded parts electro-zinc plated.'

STANDARD FEATURES — WELDING CLEVIS

1) +/- 5 degrees and +/- 90 degrees permissible angulation as shown.

2) Painted finish — one coat of zinc phosphate primer.

3) Designed to suit maximum strut and snubber loadings.

STANDARD FEATURES — HYDRAULIC SNUBBER

1) Offers little resistance to normal thermal movement.
2) Compact — furnished as a complete functional unit.
3) Can be used in compression or in tension.
4) Has a built-in reservoir with a transparent window for viewing fluid level.
5) No external piping — unit is completely manifolded.
6) Units have special fluid and seals suitable for installation in radiation areas.
7) Assessment of travel position by measuring the length of exposed piston rod.
8) Painted finish – 1 coat of two-pack surface tolerant epoxy mastic primer to 125 microns DFT and 1 coat of polyurethane finish paint to 50 microns DFT, colour Purple/Red with threaded items electro-zinc plated.
9) Chromium plated piston rod.

OPTIONAL FEATURES — HYDRAULIC SNUBBER

1) Boot or gaiter covering the exposed piston rod.
2) Direct reading travel scale.
3) Painted finish — 2 coats of two-pack surface tolerant epoxy mastic primer to 250 microns DFT and 1 coat of polyurethane finish paint to 50 microns DFT, colour Purple/Red with threaded items electro-zinc plated.

STANDARD FEATURES — CLAMPS

1) Cost-effective designs to suit the standard strut and snubber sizes.
2) Choice of three styles of clamp.
3) Loading within a **10 degree** cone of application of force.
4) Standard finish — self colour.

OPTIONAL FEATURES — CLAMPS

1) Hot dipped galvanized finish.
2) Corrosion resistant paint finish.
3) High temperature paint finish.

ORDERING INFORMATION:

RIGID STRUT

Specify part number and pin to pin dimension. If applicable, specify any optional features.

WELDING CLEVIS

Specify part number. If applicable, specify any optional features.

HYDRAULIC SNUBBER

Specify part number, installed pin to pin dimension and design movement in tension or compression. Specify whether the loading is dynamic bi-directional, e.g. seismic or water hammer, or sustained unidirectional, e.g. relief valve discharge. If applicable, specify any optional features.

PIPE CLAMP FOR RIGID STRUT AND SNUBBER

Specify part number. If applicable, specify any optional features.

SPECIAL ITEMS

In addition to the range of standard items shown in this catalogue, we design and manufacture dynamic restraints for applications not covered by the standard designs shown. Examples of special items are:

1) Stainless steel clamps.
2) Riser clamps for rigid struts.
3) Clamps for rigid struts with inclined loading.
4) Double clamps.

MATERIAL SPECIFICATIONS* — CLAMPS FOR RIGID STRUTS AND SNUBBERS

Clamps for use up to 400 °C

Item	*Indian Material*	*UK Material*	*US Material*
Clamp Body	IS2062-E275-GRA	BS EN10025 Grade S275JR	ASTM A36
Clamp Bolts	IS1367PTIII-GR4.6	BS 4190 Grade 4.6	ASTM A307 Grade B
U-Bolt	IS2062-E275-GRA	BS EN10025 Grade S275JR	ASTM A36
Nuts	IS1367PTV1-GR4	BS 4190 Grade 4	ASTM A563 Grade A
Pin	IS2062-E350-GRA	BS 970 Grade 709M40"T"	ASTM A193 Grade B7
Spacers (Clamp)	ASTM-A106	BS 1387	ASTM A106 Grade B
Spacers (Pin)	-	BS 970 Grade 230M07	AISI 1213

Clamps for use in the Range 400 °C to 530 °C

Item	*Indian Material*	*UK Material*	*US Material*
Clamp Body	ASTM A387 Grade 12 Class 2	BS EN10028-2 Grade 13CrMo4-5	ASTM A387 Grade 12 Class 2
Clamp Bolts	ASTM A193 Grade B16	BS 4882 Grade B16	ASTM A193 Grade B16
U-Bolt	ASTM A182 Grade F12 Class 2	BS EN10028-2 Grade 13CrMo4-5	ASTM A182 Grade F12 Class 2
Nuts	ASTM A194 Grade 4	BS 4882 Grade 4	ASTM A194 Grade 4
Pin	ASTM A193 Grade B7	BS 970 Grade 709M40"T"	ASTM A193 Grade B7
Spacers (Clamp)	ASTM A335 Grade P12	BS 3604 Grade 620–440	ASTM A335 Grade P12
Spacers (Pin)	AISI 1213	BS 970 Grade 230M07	AISI 1213

Clamps for use in the Range 530 °C to 570 °C

Item	*Indian Material*	*UK Material*	*US Material*
Clamp Body	ASTM A387 Grade 22 Class 2	BS EN10028-2 Grade 10CrMo9-10	ASTM A387 Grade 22 Class 2
Clamp Bolts	ASTM A193 Grade B16	BS 4882 Grade B16	ASTM A193 Grade B16
U-Bolt	ASTM A182 Grade F12 Class 2	BS EN10028-2 Grade 13 CrMo4-5	ASTM A182 Grade F12 Class 2
Nuts	ASTM A194 Grade 4	BS 4882 Grade 4	ASTM A194 Grade 4
Pin	ASTM A193 Grade B7	BS 970 Grade 709M40"T"	ASTM A193 Grade B7
Spacers (Clamp)	ASTM A335 Grade P12	BS 3604 Grade 620-440	ASTM A335 Grade P12
Spacers (Pin)	AISI 1213	BS 970 Grade 230M07	AISI 1213

***** Equivalent Indian, Japanese specifications are shown on page 63. Detailed erection and maintenance procedures for rigid struts and hydraulic snubbers are available on request.

RIGID STRUT AND WELDING CLEVIS kgf, mm

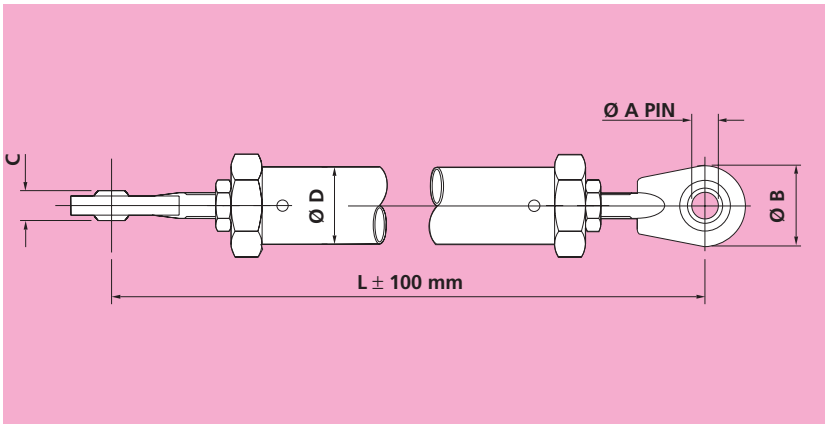

Fig. 511 Rigid Strut

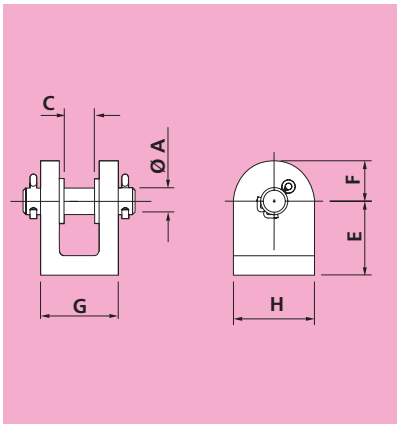

Fig. 512 Welding Clevis

LOAD CARRYING CAPACITIES OF RIGID STRUTS

Fig. 511 Rigid Struts

SIZE	Max. Load @ L= 1m	Max. Load @ L= 2m	Max. Load @ L= 3m	Max. Load @ L= 4m	Max. Load @ L= 5m	Max. Load @ L= 6m
	kgf	kgf	kgf	kgf	kgf	kgf
511-1	423	171				
511-2	985	356	158			
511-3	2125	2125	1034	567		
511-4	4293	3708	1664	948	552	
511-5	6324	6324	3632	2069	1288	809
511-6	12754	12414	7867	4448	2811	1913
511-7	18132	18132	15042	8860	5672	3875
511-8	25524	25524	25524	20643	13911	9812
511-9	55135	55135	50963	39364	27952	20225
511-10	70330	70330	70330	64670	50450	38065
511-11	90785	90785	90785	90785	90785	84373

DIMENSIONS OF RIGID STRUTS

Fig. 511 Rigid Struts

SIZE	PIN DIA. A	DIA. B	C	DIA. D	L (Min.)*	L (Max.)
	mm	mm	mm	mm	mm	mm
511-1	10	38	9	21	442	2000
511-2	10	38	9	27	456	3000
511-3	15	50	12	42	510	4000
511-4	20	70	16	48	552	5000
511-5	25	82	20	60	604	6000
511-6	35	110	25	73	670	6000
511-7	40	130	28	89	722	6000
511-8	50	150	35	114	826	6000
511-9	70	220	49	141	980	6000
511-10	80	250	55	168	1054	6000
511-11	90	280	60	219	1136	6000

*For reduced adjustment of +/- 50mm, L(Min.) can be reduced by 150mm

WEIGHTS OF RIGID STRUTS

Fig. 511 Rigid Struts

SIZE	WEIGHT @ L = Min.	WEIGHT @ L = 1m	WEIGHT @ L = 2m	WEIGHT @ L = 3m	WEIGHT @ L = 4m	WEIGHT @ L = 5m	WEIGHT @ L = 6m
	kgf	kgf	kgf	kgf	kgf	kgf	kgf
511-1	0.8	1.6	2.8				
511-2	1.1	2.0	3.7	5.4			
511-3	2.8	5.0	9.5	13.9	18.4		
511-4	4.5	6.9	12.3	17.8	23.2	28.6	
511-5	7.1	10.1	17.6	25.0	32.5	40.0	47.5
511-6	12.8	16.6	28.0	39.4	50.9	62.3	73.7
511-7	20.0	24.2	39.5	54.8	70.1	85.4	100.7
511-8	34.6	38.5	60.8	83.2	105.5	127.9	150.2
511-9	78.3	78.9	109.9	140.9	171.8	202.8	233.8
511-10	112.6	110.3	153.0	195.6	238.2	280.8	323.4
511-11	175.3	166.5	231.2	295.9	360.7	425.4	490.1

AXIAL STIFFNESSES

Fig. 511 Rigid Struts in Tension

SIZE	Stiffness @ L = Min.	Stiffness @ L = 1m	Stiffness @ L = 2m	Stiffness @ L = 3m	Stiffness @ L = 4m	Stiffness @ L = 5m	Stiffness @ L = 6m
	kgf/mm × 1000	kgf/mm × 1000	kgf/mm × 1000	kgf/mm × 1000	kgf/mm × 1000	kgf/mm × 1000	kgf/mm × 1000
511-1	6.6	3.1	1.6				
511-2	9.5	4.4	2.2	1.5			
511-3	16.8	9.9	5.4	3.7	2.8		
511-4	22.2	13.1	6.9	4.7	3.5	2.8	
511-5	30.5	19.0	9.7	6.5	4.9	3.9	3.3
511-6	43.8	29.7	15.0	10.0	7.6	6.0	5.0
511-7	57.7	41.4	20.5	13.6	10.2	8.2	6.8
511-8	79.6	64.6	31.0	20.4	15.2	12.1	10.0
511-9	117.3	114.0	47.8	30.3	22.1	17.4	14.4
511-10	143.9	154.4	65.4	41.5	30.4	23.9	19.8
511-11	183.7	214.9	95.6	61.5	45.3	35.9	29.7

LOAD CARRYING CAPACITIES OF WELDING CLEVISES

Fig. 512 Welding Clevis

SIZE	Max. Load
	kgf
512-1	423
512-2	985
512-3	2125
512-4	4293
512-5	6324
512-6	12754
512-7	18132
512-8	25524
512-9	55135
512-10	70330
512-11	90785

DIMENSIONS OF WELDING CLEVISES

Fig. 512 Welding Clevis

SIZE	PIN DIA. A	C	E	F	G	H
	mm	mm	mm	mm	mm	mm
512-1	10	9	30	12.5	30	25
512-2	10	9	30	12.5	30	25
512-3	15	12	38	20	35	40
512-4	20	16	52	25	45	50
512-5	25	20	62	35	55	70
512-6	35	25	80	50	70	100
512-7	40	28	98	50	90	100
512-8	50	35	115	65	110	130
512-9	70	49	160	90	145	180
512-10	80	55	190	90	180	180
512-11	90	60	210	105	195	210

WEIGHTS OF WELDING CLEVISES

Fig. 512 Welding Clevis

SIZE	WEIGHT
	kgf
512-1	0.17
512-2	0.17
512-3	0.41
512-4	0.89
512-5	1.9
512-6	4.3
512-7	6.8
512-8	13.2
512-9	32.4
512-10	48.5
512-11	67.4

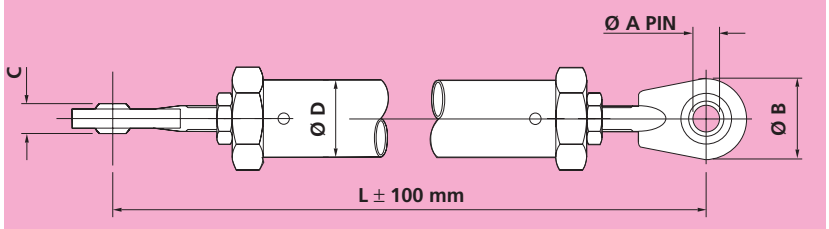

Fig. 511 Rigid Strut

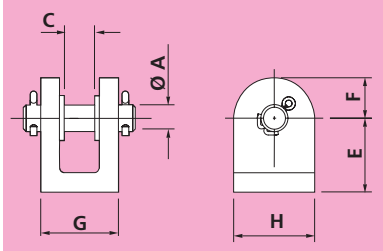

Fig. 512 Welding Clevis

LOAD CARRYING CAPACITIES OF RIGID STRUTS

Fig. 511 Rigid Struts

SIZE	Max. Load @ L= 1m	Max. Load @ L= 2m	Max. Load @ L= 3m	Max. Load @ L= 4m	Max. Load @ L= 5m	Max. Load @ L= 6m
	kN	kN	kN	kN	kN	kN
511-1	4.15	1.67				
511-2	9.7	3.49	1.55			
511-3	20.8	20.8	10.1	5.56		
511-4	42.1	36.4	16.3	9.30	5.41	
511-5	62.0	62.0	35.6	20.3	12.6	7.94
511-6	125	122	77.1	43.6	27.6	18.8
511-7	178	178	148	86.9	55.6	38.0
511-8	250	250	250	202	136	96.2
511-9	541	541	500	386	274	198
511-10	690	690	690	634	495	373
511-11	890	890	890	890	890	827

DIMENSIONS OF RIGID STRUTS

Fig. 511 Rigid Struts

SIZE	PIN DIA. A	DIA. B	C	DIA. D	L (Min.)*	L (Max.)
	mm	mm	mm	mm	mm	mm
511-1	10	38	9	21	442	2000
511-2	10	38	9	27	456	3000
511-3	15	50	12	42	510	4000
511-4	20	70	16	48	552	5000
511-5	25	82	20	60	604	6000
511-6	35	110	25	73	670	6000
511-7	40	130	28	89	722	6000
511-8	50	150	35	114	826	6000
511-9	70	220	49	141	980	6000
511-10	80	250	55	168	1054	6000
511-11	90	280	60	219	1136	6000

*For reduced adjustment of +/- 50mm, L(Min.) can be reduced by 150mm

WEIGHTS OF RIGID STRUTS

Fig. 511 Rigid Struts

SIZE	WEIGHT @ L = Min.	WEIGHT @ L = 1m	WEIGHT @ L = 2m	WEIGHT @ L = 3m	WEIGHT @ L = 4m	WEIGHT @ L = 5m	WEIGHT @ L = 6m
	N	N	N	N	N	N	N
511-1	8	15	28				
511-2	11	20	36	53			
511-3	27	49	93	137	181		
511-4	44	68	121	174	227	280	
511-5	70	99	172	246	319	393	466
511-6	126	163	275	387	499	611	723
511-7	196	237	387	537	687	837	987
511-8	339	377	596	816	1035	1254	1473
511-9	768	774	1078	1381	1685	1989	2293
511-10	1105	1082	1500	1918	2336	2754	3172
511-11	1719	1633	2267	2902	3537	4172	4806

AXIAL STIFFNESSES

Fig. 511 Rigid Struts in Tension

SIZE	Stiffness @ L = Min.	Stiffness @ L = 1m	Stiffness @ L = 2m	Stiffness @ L = 3m	Stiffness @ L = 4m	Stiffness @ L = 5m	Stiffness @ L = 6m
	kN/mm	kN/mm	kN/mm	kN/mm	kN/mm	kN/mm	kN/mm
511-1	64	31	16				
511-2	93	43	22	15			
511-3	165	98	53	37	28		
511-4	218	129	67	46	35	28	
511-5	299	186	95	64	48	39	32
511-6	430	291	147	99	74	59	49
511-7	566	406	201	134	100	80	67
511-8	781	633	304	200	149	118	98
511-9	1150	1118	469	297	217	171	141
511-10	1411	1515	641	407	298	235	194
511-11	1802	2108	937	603	444	352	291

LOAD CARRYING CAPACITIES OF WELDING CLEVISES

Fig. 512 Welding Clevis

SIZE	Max. Load
	kN
512-1	4.15
512-2	9.66
512-3	20.8
512-4	42.1
512-5	62.0
512-6	125
512-7	178
512-8	250
512-9	541
512-10	690
512-11	890

DIMENSIONS OF WELDING CLEVISES

Fig. 512 Welding Clevis

SIZE	PIN DIA. A	C	E	F	G	H
	mm	mm	mm	mm	mm	mm
512-1	10	9	30	12.5	30	25
512-2	10	9	30	12.5	30	25
512-3	15	12	38	20	35	40
512-4	20	16	52	25	45	50
512-5	25	20	62	35	55	70
512-6	35	25	80	50	70	100
512-7	40	28	98	50	90	100
512-8	50	35	115	65	110	130
512-9	70	49	160	90	145	180
512-10	80	55	190	90	180	180
512-11	90	60	210	105	195	210

WEIGHTS OF WELDING CLEVISES

Fig. 512 Welding Clevis

SIZE	WEIGHT
	N
512-1	1.7
512-2	1.7
512-3	4.1
512-4	8.8
512-5	19
512-6	43
512-7	66
512-8	130
512-9	317
512-10	476
512-11	661

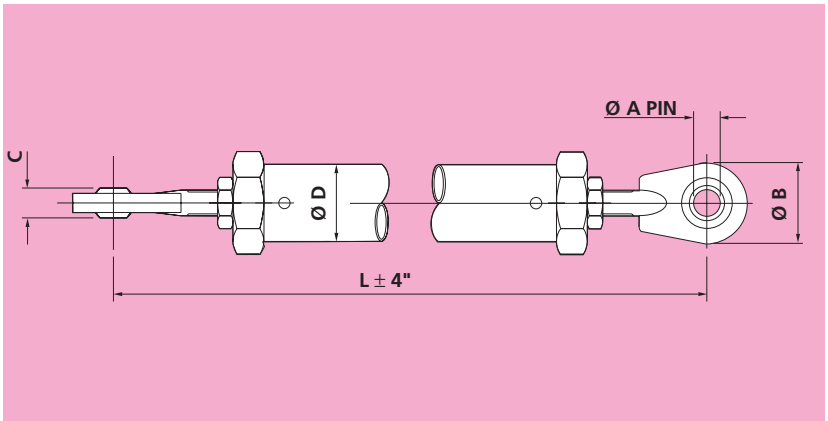

Fig. 511 Rigid Strut

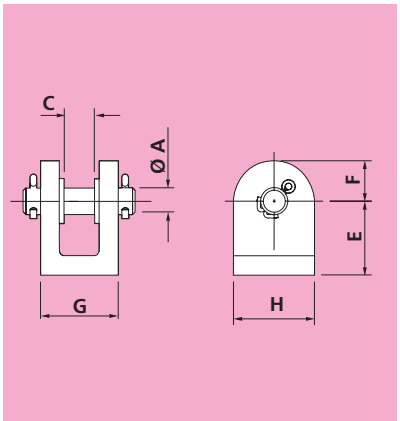

Fig. 512 Welding Clevis

LOAD CARRYING CAPACITIES OF RIGID STRUTS

Fig. 511 Rigid Struts

SIZE	Max. Load @ L= 39in	Max. Load @ L= 79in	Max. Load @ L= 118in	Max. Load @ L= 157in	Max. Load @ L= 197in	Max. Load @ L= 236in
	lbs	lbs	lbs	lbs	lbs	lbs
511-1	933	376				
511-2	2173	786	349			
511-3	4685	4865	2279	1251		
511-4	9465	8174	3669	2091	1217	
511-5	13942	13942	8006	4561	2840	1784
511-6	28117	27368	17343	9807	6197	4217
511-7	39974	39974	33162	19534	12504	8544
511-8	56269	56269	56269	45509	30668	21632
511-9	121552	121552	112352	86781	61623	44589
511-10	155050	155050	155050	142572	111223	83919
511-11	200144	200144	200144	200144	200144	186010

DIMENSIONS OF RIGID STRUTS

Fig. 511 Rigid Struts

SIZE	PIN DIA. A	DIA. B	C	DIA. D	L (Min.)*	L (Max.)
	in	in	in	in	in	in
511-1	0.39	1.50	0.35	0.83	17.4	78.7
511-2	0.39	1.50	0.35	1.06	18.0	118.1
511-3	0.59	1.97	0.47	1.65	20.1	157.5
511-4	0.79	2.76	0.63	1.89	21.7	196.9
511-5	0.98	3.23	0.79	2.36	23.8	236.2
511-6	1.38	4.33	0.98	2.87	26.4	236.2
511-7	1.57	5.12	1.10	3.50	28.4	236.2
511-8	1.97	5.91	1.38	4.49	32.5	236.2
511-9	2.76	8.66	1.93	5.55	38.6	236.2
511-10	3.15	9.84	2.17	6.61	41.5	236.2
511-11	3.54	11.02	2.36	8.62	44.7	236.2

*For reduced adjustment of +/- 2in, L(Min.) can be reduced by 6in

WEIGHTS OF RIGID STRUTS

Fig. 511 Rigid Struts

SIZE	WEIGHT @ L = Min.	WEIGHT @ L = 39in	WEIGHT @ L = 79in	WEIGHT @ L = 118in	WEIGHT @ L = 157in	WEIGHT @ L = 197in	WEIGHT @ L = 236in
	lbs	lbs	lbs	lbs	lbs	lbs	lbs
511-1	1.9	3.4	6.2				
511-2	2.4	4.5	8.2	11.9			
511-3	6.2	11.0	20.9	30.7	40.6		
511-4	9.9	15.2	27.2	39.1	51.1	63.0	
511-5	15.6	22.2	38.7	55.2	71.7	88.2	104.8
511-6	28.3	36.6	61.8	87.0	112.1	137.3	162.5
511-7	44.0	53.4	87.1	120.8	154.5	188.2	222.0
511-8	76.2	84.8	134.1	183.4	232.6	281.9	331.2
511-9	172.6	173.9	242.2	310.5	378.8	447.1	515.4
511-10	248.3	243.2	337.2	431.2	525.1	619.1	713.0
511-11	386.4	367.0	509.7	652.4	795.1	937.8	108.5

AXIAL STIFFNESSES

Fig. 511 Rigid Struts in Tension

SIZE	Stiffness @ L = Min.	Stiffness @ L = 39in	Stiffness @ L = 79in	Stiffness @ L = 118in	Stiffness @ L = 157in	Stiffness @ L = 197in	Stiffness @ L = 236in
	kips/in	kips/in	kips/in	kips/in	kips/in	kips/in	kips/in
511-1	368	176	91				
511-2	534	248	125	83			
511-3	943	557	303	208	159		
511-4	1245	736	385	261	197	158	
511-5	1710	1064	545	366	276	221	184
511-6	2453	1662	841	563	423	339	282
511-7	3231	2317	1149	764	572	457	381
511-8	4460	3616	1733	1140	849	676	562
511-9	6566	6384	2678	1694	1239	977	806
511-10	8056	8649	3661	2322	1700	1341	1107
511-11	10288	12035	5352	3442	2536	2008	1662

LOAD CARRYING CAPACITIES OF WELDING CLEVISES

Fig. 512 Welding Clevis

SIZE	Max. Load
	lbs
512-1	933
512-2	2173
512-3	4685
512-4	9465
512-5	13942
512-6	28117
512-7	39974
512-8	56269
512-9	121552
512-10	155050
512-11	200144

DIMENSIONS OF WELDING CLEVISES

Fig. 512 Welding Clevis

SIZE	PIN DIA. A	C	E	F	G	H
	in	in	in	in	in	in
512-1	0.39	0.35	1.18	0.49	1.18	0.98
512-2	0.39	0.35	1.18	0.49	1.18	0.98
512-3	0.59	0.47	1.50	0.79	1.38	1.57
512-4	0.79	0.63	2.05	0.98	1.77	1.97
512-5	0.98	0.79	2.44	1.38	2.17	2.76
512-6	1.38	0.98	3.15	1.97	2.76	3.94
512-7	1.57	1.10	3.86	1.97	3.54	3.94
512-8	1.97	1.38	4.53	2.56	4.33	5.12
512-9	2.76	1.93	6.30	3.54	5.71	7.09
512-10	3.15	2.17	7.48	3.54	7.09	7.09
512-11	3.54	2.36	8.27	4.13	7.68	8.27

WEIGHTS OF WELDING CLEVISES

Fig. 512 Welding Clevis

SIZE	WEIGHT
	lbs
512-1	0.38
512-2	0.38
512-3	0.91
512-4	2.0
512-5	4.2
512-6	9.6
512-7	14.9
512-8	29.2
512-9	71.3
512-10	107.0
512-11	148.5

HYDRAULIC SNUBBER kgf, mm

Fig. 516 Snubber (Short Type)

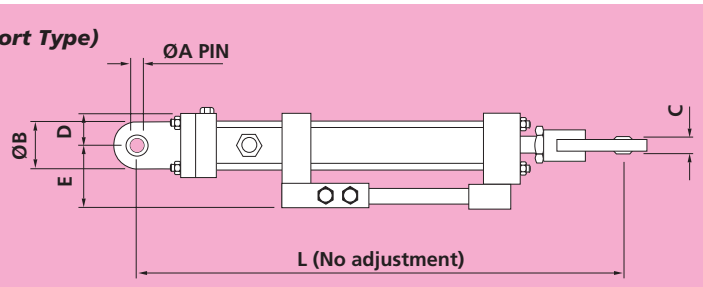

Fig. 517 Snubber (Adjustable Strut Type)

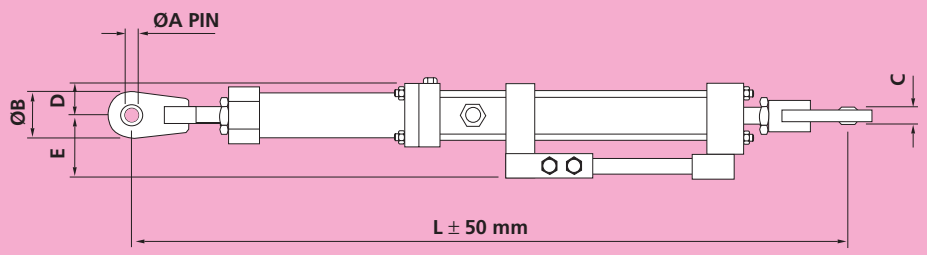

Snubber Size Fig.516- or Fig.517-	Cylinder Bore Size mm	Cylinder Stroke mm	Dia. A mm	Dia. B mm	C mm	D mm	E mm	Fig. 516 Short Snubber L (mm) Fully Closed	Mid Stroke	Fully Ext.	Weight kgf	Fig. 517 Adjustable Strut Snubber L (mm) Min. Fully Closed	Min. Fully Ext.	Max. Fully Closed	Weight @ L = Min. kgf	Weight @ L = Max kgf
1-5	20	127	10	38	9	29	73	442	506	569	6	628	755	2000	6	8
1-10	20	254	10	38	9	29	73	633	760	887	7	819	1073	2000	7	9
2-5	25	127	10	38	9	35	79	463	526	590	8	655	782	2500	8	11
2-10	25	254	10	38	9	35	79	653	780	907	9	845	1099	2500	10	12
3-5	40	127	15	50	12	32	76	518	582	645	10	723	850	4500	11	28
3-10	40	254	15	50	12	32	76	709	836	963	12	914	1168	4000	13	27
3-15	40	381	15	50	12	32	76	899	1090	1280	15	1104	1485	4000	15	28
4-5	50	127	20	70	16	38	83	572	636	699	14	783	910	5000	15	38
4-10	50	254	20	70	16	38	83	763	890	1017	17	974	1228	5000	19	40
4-15	50	381	20	70	16	38	83	953	1144	1334	20	1164	1545	5000	22	43
4-20	50	508	20	70	16	38	83	1144	1398	1652	24	1355	1863	4500	25	42
5-5	65	127	25	82	20	44	89	618	681	745	20	844	971	6000	22	60
5-10	65	254	25	82	20	44	89	808	935	1062	24	1034	1288	6000	26	63
5-15	65	381	25	82	20	44	89	999	1189	1380	29	1225	1606	6000	31	67
5-20	65	508	25	82	20	44	89	1189	1443	1697	33	1415	1923	6000	35	70
6-5	80	127	35	110	25	57	102	741	805	868	38	976	1103	6000	41	98
6-10	80	254	35	110	25	57	102	941	1068	1195	45	1176	1430	6000	49	104
6-15	80	381	35	110	25	57	102	1141	1332	1522	53	1376	1757	6000	56	109
6-20	80	508	35	110	25	57	102	1341	1595	1849	61	1576	2084	6000	64	115
7-5	100	127	40	130	28	64	108	771	835	898	48	1030	1157	6000	53	129
7-10	100	254	40	130	28	64	108	962	1089	1216	56	1221	1475	6000	61	134
7-15	100	381	40	130	28	64	108	1152	1343	1533	65	1411	1792	6000	69	140
7-20	100	508	40	130	28	64	108	1343	1597	1851	73	1602	2110	6000	78	145
8-5	125	127	50	150	35	83	127	866	930	993	88	1144	1271	6000	97	206
8-10	125	254	50	150	35	83	127	1057	1184	1311	105	1335	1589	6000	113	218
8-15	125	381	50	150	35	83	127	1247	1438	1628	121	1525	1906	6000	130	230
8-20	125	508	50	150	35	83	127	1438	1692	1946	138	1716	2224	6000	146	243
9-5	150	127	70	220	49	95	140	1025	1088	1152	142	1343	1470	6000	158	304
9-10	150	254	70	220	49	95	140	1215	1342	1469	163	1533	1787	6000	180	319
9-15	150	381	70	220	49	95	140	1406	1596	1787	184	1724	2105	6000	201	335
9-20	150	508	70	220	49	95	140	1596	1850	2104	205	1914	2422	6000	222	350
10-5	200	127	80	250	55	121	165	1192	1255	1319	277	1528	1655	6000	301	494
10-10	200	254	80	250	55	121	165	1382	1509	1636	312	1718	1972	6000	337	521
10-15	200	381	80	250	55	121	165	1573	1763	1954	348	1909	2290	6000	372	549
10-20	200	508	80	250	55	121	165	1763	2017	2271	383	2099	2607	6000	408	576
11-5	250	127	90	280	60	160	205	1346	1410	1473	501	1699	1826	6000	544	826
11-10	250	254	90	280	60	160	205	1524	1651	1778	551	1877	2131	6000	595	865
11-15	250	381	90	280	60	160	205	1702	1892	2083	602	2055	2436	6000	645	904
11-20	250	508	90	280	60	160	205	1880	2134	2388	653	2233	2741	6000	696	943

LOAD CAPACITIES OF HYDRAULIC SNUBBERS IN TENSION AND COMPRESSION

				Fig. 516 Short Snubber		Fig. 517 Adjustable Strut Snubber														
Snubber Size Fig. 516 – or Fig. 517 –	Cylinder Bore Size mm	Cylinder Stroke mm	Max. Rated Tensile Load kgf	Closed Centres (L) mm	Max. Rated Comp. Load kgf	Min. Closed Centres (L) mm	Max. Closed Centres (L) mm	Max. Closed Centres for Max. Comp. Load = Full Rated Tensile Load mm	Max. Comp. Load at Closed Crs. = Min. kgf	Max. Comp. Load at Closed Crs. = 1000 mm kgf	Max. Comp. Load at Closed Crs. = 1500 mm kgf	Max. Comp. Load at Closed Crs. = 2000 mm kgf	Max. Comp. Load at Closed Crs. = 2500 mm kgf	Max. Comp. Load at Closed Crs. = 3000 mm kgf	Max. Comp. Load at Closed Crs. = 3500 mm kgf	Max. Comp. Load at Closed Crs. = 4000 mm kgf	Max. Comp. Load at Closed Crs. = 4500 mm kgf	Max. Comp. Load at Closed Crs. = 5000 mm kgf	Max. Comp. Load at Closed Crs. = 5500 mm kgf	Max. Comp. Load at Closed Crs. = 6000 mm kgf
1-5	20	127	335	442	335	628	2000	1100	335	335	211	123								
1-10	20	254	335	633	211	819	2000	n/a	211	202	181	101								
2-5	25	127	650	463	650	655	2500	1200	650	650	468	285	180							
2-10	25	254	650	653	529	845	2500	n/a	529	514	392	244	152							
3-5	40	127	1769	518	1769	723	4500	2000	1769	1769	1769	1769	1300	902	685	490	388			
3-10	40	254	1769	709	1119	914	4000	n/a	1119	1103	1037	985	939	830	625	454				
3-15	40	381	1769	899	568	1104	4000	n/a	568		526	483	445	412	380	350				
4-5	50	127	3175	572	3175	783	5000	1900	3175	3175	3175	3078	2046	1426	1079	850	661	502		
4-10	50	254	3175	763	2851	974	5000	n/a	2851	2838	2735	2656	1807	1331	992	782	574	466		
4-15	50	381	3175	953	1632	1164	5000	n/a	1632		1579	1508	1449	1171	903	713	535	438		
4-20	50	508	3175	1144	989	1355	4500	n/a	989		974	911	859	813	771	638	493			
5-5	65	127	4990	618	4990	844	6000	2300	4990	4990	4990	4990	4436	3191	2422	1848	1463	1193	961	755
5-10	65	254	4990	808	4990	1034	6000	2100	4990		4990	4990	3997	2957	2203	1728	1351	1121	886	715
5-15	65	381	4990	999	3602	1225	6000	n/a	3602		3518	3404	3309	2631	1982	1605	1237	1039	856	671
5-20	65	508	4990	1189	2338	1415	6000	n/a	2338		2314	2209	2122	2045	1848	1478	1195	964	744	625
6-5	80	127	7983	741	7983	976	6000	2700	7983	7983	7983	7983	7983	6841	5236	4069	3197	2610	2167	1802
6-10	80	254	7983	941	7983	1176	6000	2600	7983		7983	7983	7983	6308	4736	3729	3007	2431	1999	1705
6-15	80	381	7983	1141	7983	1376	6000	2400	7983		7983	7983	7809	5786	4367	3515	2810	2249	1828	1593
6-20	80	508	7983	1341	7859	1576	6000	n/a	7859			7662	7196	5299	4144	3169	2608	2064	1775	1489
7-5	100	127	12791	771	12791	1030	6000	3000	12791		12791	12791	12791	12791	10303	8141	6384	5204	4406	3626
7-10	100	254	12791	962	12791	1221	6000	2900	12791		12791	12791	12791	12350	9627	7494	6124	4960	4172	3405
7-15	100	381	12791	1152	12791	1411	6000	2800	12791		12791	12791	12791	11461	8944	7028	5681	4712	3937	3183
7-20	100	508	12791	1343	12565	1602	6000	n/a	12565			12308	12037	10618	8284	6736	5411	4459	3699	3125
8-5	125	127	19958	866	19958	1144	6000	3800	19958		19958	19958	19958	19958	19958	18871	15425	12567	10552	9095
8-10	125	254	19958	1057	19958	1355	6000	3700	19958		19958	19958	19958	19958	19958	17815	14421	12135	10147	8455
8-15	125	381	19958	1247	19958	1525	6000	3500	19958			19958	19958	19958	19958	16463	13661	11417	9467	8060
8-20	125	508	19958	1438	19958	1716	6000	3300	19958			19958	19958	19958	19060	15664	12882	10684	9029	7652
9-5	150	127	28849	1025	28849	1343	6000	4700	28849		28849	28849	28849	28849	28849	28849	28849	26263	22275	18714
9-10	150	254	28849	1215	28849	1533	6000	4500	28849			28849	28849	28849	28849	28849	28849	24855	20920	18133
9-15	150	381	28849	1406	28849	1724	6000	4400	28849			28849	28849	28849	28849	28849	27713	23425	20277	17171
9-20	150	508	28849	1596	28849	1914	6000	4200	28849			28849	28849	28849	28849	28849	26223	22338	19245	16195
10-5	200	127	51256	1192	51256	1528	6000	4600	51256			51256	51256	51256	51256	51256	51256	46950	40927	35472
10-10	200	254	51256	1382	51256	1718	6000	4400	51256			51256	51256	51256	51256	51256	51240	44258	38844	33479
10-15	200	381	51256	1573	51256	1909	6000	4300	51256			51256	51256	51256	51256	51256	48961	42527	36710	31943
10-20	200	508	51256	1763	51256	2099	6000	4100	51256				51256	51256	51256	51256	46790	40357	35056	30359
11-5	250	127	85231	1346	85231	1699	6000	5600	85231			85231	85231	85231	85231	85231	85231	85231	85231	79430
11-10	250	254	85231	1524	85231	1877	6000	5400	85231			85231	85231	85231	85231	85231	85231	85231	84344	76868
11-15	250	381	85231	1702	85231	2055	6000	5200	85231				85231	85231	85231	85231	85231	85231	81579	74198
11-20	250	508	85231	1880	85231	2233	6000	5000	85231				85231	85231	85231	85231	85231	85231	78913	70777

Fig. 516 Snubber (Short Type)

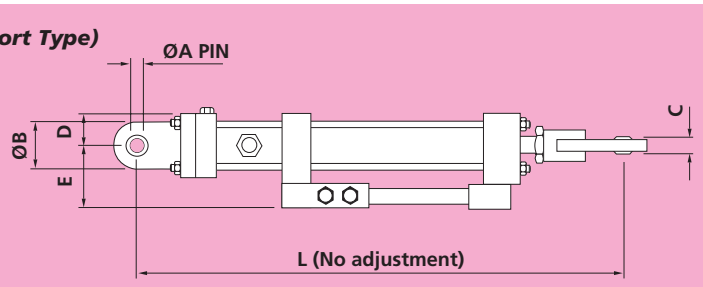

Fig. 517 Snubber (Adjustable Strut Type)

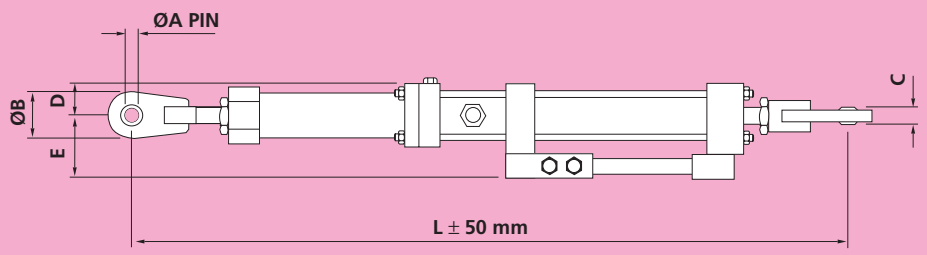

Snubber Size Fig.516- or Fig.517-	Cylinder Bore Size mm	Cylinder Stroke mm	Dia. A mm	Dia. B mm	C mm	D mm	E mm	Fig. 516 Short Snubber L (mm) Fully Closed	Mid Stroke	Fully Ext.	Weight N	Fig. 517 Adjustable Strut Snubber L (mm) Min. Fully Closed	Min. Fully Ext.	Max. Fully Closed	Weight @ L = Min. N	Weight @ L = Max N
1-5	20	127	10	38	9	29	73	442	506	569	58	628	755	2000	61	78
1-10	20	254	10	38	9	29	73	633	760	887	67	819	1073	2000	70	84
2-5	25	127	10	38	9	35	79	463	526	590	78	655	782	2500	81	111
2-10	25	254	10	38	9	35	79	653	780	907	91	845	1099	2500	94	121
3-5	40	127	15	50	12	32	76	518	582	645	98	723	850	4500	108	273
3-10	40	254	15	50	12	32	76	709	836	963	120	914	1168	4000	130	264
3-15	40	381	15	50	12	32	76	899	1090	1280	142	1104	1485	4000	152	278
4-5	50	127	20	70	16	38	83	572	636	699	137	783	910	5000	151	374
4-10	50	254	20	70	16	38	83	763	890	1017	169	974	1228	5000	183	396
4-15	50	381	20	70	16	38	83	953	1144	1334	201	1164	1545	5000	215	418
4-20	50	508	20	70	16	38	83	1144	1398	1652	233	1355	1863	4500	246	413
5-5	65	127	25	82	20	44	89	618	681	745	192	844	971	6000	213	591
5-10	65	254	25	82	20	44	89	808	935	1062	237	1034	1288	6000	258	622
5-15	65	381	25	82	20	44	89	999	1189	1380	282	1225	1606	6000	303	653
5-20	65	508	25	82	20	44	89	1189	1443	1697	327	1415	1923	6000	348	684
6-5	80	127	35	110	25	57	102	741	805	868	369	976	1103	6000	402	965
6-10	80	254	35	110	25	57	102	941	1068	1195	445	1176	1430	6000	478	1018
6-15	80	381	35	110	25	57	102	1141	1332	1522	521	1376	1757	6000	553	1071
6-20	80	508	35	110	25	57	102	1341	1595	1849	596	1576	2084	6000	629	1124
7-5	100	127	40	130	28	64	108	771	835	898	470	1030	1157	6000	518	1264
7-10	100	254	40	130	28	64	108	962	1089	1216	552	1221	1475	6000	600	1317
7-15	100	381	40	130	28	64	108	1152	1343	1533	633	1411	1792	6000	681	1369
7-20	100	508	40	130	28	64	108	1343	1597	1851	714	1602	2110	6000	762	1422
8-5	125	127	50	150	35	83	127	866	930	993	865	1144	1271	6000	948	2018
8-10	125	254	50	150	35	83	127	1057	1184	1311	1027	1335	1589	6000	1110	2138
8-15	125	381	50	150	35	83	127	1247	1438	1628	1189	1525	1906	6000	1272	2258
8-20	125	508	50	150	35	83	127	1438	1692	1946	1351	1716	2224	6000	1434	2378
9-5	150	127	70	220	49	95	140	1025	1088	1152	1390	1343	1470	6000	1553	2982
9-10	150	254	70	220	49	95	140	1215	1342	1469	1597	1533	1787	6000	1761	3132
9-15	150	381	70	220	49	95	140	1406	1596	1787	1805	1724	2105	6000	1968	3282
9-20	150	508	70	220	49	95	140	1596	1850	2104	2013	1914	2422	6000	2176	3432
10-5	200	127	80	250	55	121	165	1192	1255	1319	2716	1528	1655	6000	2954	4845
10-10	200	254	80	250	55	121	165	1382	1509	1636	3064	1718	1972	6000	3302	5113
10-15	200	381	80	250	55	121	165	1573	1763	1954	3412	1909	2290	6000	3650	5381
10-20	200	508	80	250	55	121	165	1763	2017	2271	3759	2099	2607	6000	3998	5649
11-5	250	127	90	280	60	160	205	1346	1410	1473	4909	1699	1826	6000	5334	8097
11-10	250	254	90	280	60	160	205	1524	1651	1778	5406	1877	2131	6000	5830	8481
11-15	250	381	90	280	60	160	205	1702	1892	2083	5903	2055	2436	6000	6327	8865
11-20	250	508	90	280	60	160	205	1880	2134	2388	6399	2233	2741	6000	6824	9249

LOAD CAPACITIES OF HYDRAULIC SNUBBERS IN TENSION AND COMPRESSION

				Fig. 516 Short Snubber		Fig. 517 Adjustable Strut Snubber														
Snubber Size Fig. 516 – or Fig. 517 –	Cylinder Bore Size mm	Cylinder Stroke mm	Max. Rated Tensile Load kN	Closed Centres (L) mm	Max. Rated Comp. Load kN	Min. Closed Centres (L) mm	Max. Closed Centres (L) mm	Max. Closed Centres for Max. Comp. Load = Full Rated Tensile Load mm	Max. Comp. Load at Closed Crs. = Min. kN	Max. Comp. Load at Closed Crs. = 1000 mm kN	Max. Comp. Load at Closed Crs. = 1500 mm kN	Max. Comp. Load at Closed Crs. = 2000 mm kN	Max. Comp. Load at Closed Crs. = 2500 mm kN	Max. Comp. Load at Closed Crs. = 3000 mm kN	Max. Comp. Load at Closed Crs. = 3500 mm kN	Max. Comp. Load at Closed Crs. = 4000 mm kN	Max. Comp. Load at Closed Crs. = 4500 mm kN	Max. Comp. Load at Closed Crs. = 5000 mm kN	Max. Comp. Load at Closed Crs. = 5500 mm kN	Max. Comp. Load at Closed Crs. = 6000 mm kN
1-5	20	127	3.28	442	3.28	628	2000	1100	3.28	3.28	2.07	1.21								
1-10	20	254	3.28	633	2.07	819	2000	n/a	2.07	1.98	1.77	0.99								
2-5	25	127	6.38	463	6.38	655	2500	1200	6.38	6.38	4.59	2.80	1.76							
2-10	25	254	6.38	653	5.18	845	2500	n/a	5.18	5.04	3.85	2.39	1.49							
3-5	40	127	17.35	518	17.35	723	4500	2000	17.35	17.35	17.35	17.35	12.75	8.84	6.72	4.80	3.80			
3-10	40	254	17.35	709	10.98	914	4000	n/a	10.98	10.82	10.17	9.66	9.21	8.14	6.13	4.45				
3-15	40	381	17.35	899	5.57	1104	4000	n/a	5.57		5.15	4.73	4.37	4.04	3.73	3.43				
4-5	50	127	31.14	572	31.14	783	5000	1900	31.14	31.14	31.14	30.18	20.06	13.99	10.58	8.33	6.48	4.92		
4-10	50	254	31.14	763	27.96	974	5000	n/a	27.96	27.83	26.82	26.05	17.72	13.05	9.73	7.67	5.63	4.57		
4-15	50	381	31.14	953	16.00	1164	5000	n/a	16.00		15.49	14.79	14.21	11.48	8.86	7.00	5.24	4.29		
4-20	50	508	31.14	1144	9.70	1355	4500	n/a	9.70		9.55	8.94	8.42	7.97	7.56	6.25	4.84			
5-5	65	127	48.93	618	48.93	844	6000	2300	48.93	48.93	48.93	48.93	43.50	31.30	23.75	18.12	14.35	11.70	9.42	7.40
5-10	65	254	48.93	808	48.93	1034	6000	2100	48.93		48.93	48.93	39.20	29.00	21.61	16.95	13.25	11.00	8.69	7.02
5-15	65	381	48.93	999	35.32	1225	6000	n/a	35.32		34.50	33.38	32.45	25.80	19.44	15.74	12.13	10.19	8.39	6.58
5-20	65	508	48.93	1189	22.93	1415	6000	n/a	22.93		22.69	21.66	20.81	20.06	18.12	14.50	11.71	9.45	7.29	6.13
6-5	80	127	78.29	741	78.29	976	6000	2700	78.29	78.29	78.29	78.29	78.29	67.09	51.34	39.90	31.35	25.59	21.25	17.67
6-10	80	254	78.29	941	78.29	1176	6000	2600	78.29		78.29	78.29	78.29	61.86	46.45	36.57	29.48	23.84	19.60	16.72
6-15	80	381	78.29	1141	78.29	1376	6000	2400	78.29		78.29	78.29	76.58	56.74	42.82	34.47	27.56	22.06	17.93	15.62
6-20	80	508	78.29	1341	77.07	1576	6000	n/a	77.07			75.14	70.57	51.97	40.64	31.08	25.57	20.24	17.41	14.60
7-5	100	127	125.44	771	125.44	1030	6000	3000	125.44		125.44	125.44	125.44	125.44	101.04	79.83	62.60	51.04	43.20	35.56
7-10	100	254	125.44	962	125.44	1221	6000	2900	125.44		125.44	125.44	125.44	121.11	94.40	73.50	60.06	48.64	40.92	33.39
7-15	100	381	125.44	1152	125.44	1411	6000	2800	125.44		125.44	125.44	125.44	112.39	87.71	68.92	55.71	46.20	38.61	31.21
7-20	100	508	125.44	1343	123.22	1602	6000	n/a	123.22			120.70	118.04	104.13	81.23	66.06	53.06	43.73	36.28	30.64
8-5	125	127	195.72	866	195.72	1144	6000	3800	195.72		195.72	195.72	195.72	195.72	195.72	185.06	151.27	123.24	103.48	89.19
8-10	125	254	195.72	1057	195.72	1335	6000	3700	195.72		195.72	195.72	195.72	195.72	195.72	174.71	141.42	119.00	99.51	82.91
8-15	125	381	195.72	1247	195.72	1525	6000	3500	195.72			195.72	195.72	195.72	195.72	161.45	133.97	111.97	92.84	79.04
8-20	125	508	195.72	1438	195.72	1716	6000	3300	195.72			195.72	195.72	195.72	186.92	153.61	126.33	104.77	88.54	75.04
9-5	150	127	282.91	1025	282.91	1343	6000	4700	282.91		282.91	282.91	282.91	282.91	282.91	282.91	282.91	257.55	218.45	183.52
9-10	150	254	282.91	1215	282.91	1533	6000	4500	282.91			282.91	282.91	282.91	282.91	282.91	282.91	243.75	205.16	177.83
9-15	150	381	282.91	1406	282.91	1724	6000	4400	282.91			282.91	282.91	282.91	282.91	282.91	271.77	229.72	198.85	168.39
9-20	150	508	282.91	1596	282.91	1914	6000	4200	282.91			282.91	282.91	282.91	282.91	282.91	257.16	219.06	188.73	158.82
10-5	200	127	502.65	1192	502.65	1528	6000	4600	502.65			502.65	502.65	502.65	502.65	502.65	502.65	460.43	401.35	347.86
10-10	200	254	502.65	1382	502.65	1718	6000	4400	502.65			502.65	502.65	502.65	502.65	502.65	502.49	434.03	380.93	328.32
10-15	200	381	502.65	1573	502.65	1909	6000	4300	502.65			502.65	502.65	502.65	502.65	502.65	480.14	417.05	360.00	313.26
10-20	200	508	502.65	1763	502.65	2099	6000	4100	502.65				502.65	502.65	502.65	502.65	458.85	395.76	343.78	297.72
11-5	250	127	835.83	1346	835.83	1699	6000	5600	835.83			835.83	835.83	835.83	835.83	835.83	835.83	835.83	835.83	778.95
11-10	250	254	835.83	1524	835.83	1877	6000	5400	835.83			835.83	835.83	835.83	835.83	835.83	835.83	835.83	827.13	753.82
11-15	250	381	835.83	1702	835.83	2055	6000	5200	835.83				835.83	835.83	835.83	835.83	835.83	835.83	800.02	727.64
11-20	250	508	835.83	1880	835.83	2233	6000	5000	835.83				835.83	835.83	835.83	835.83	835.83	835.83	773.88	694.09

Fig. 516 Snubber (Short Type)

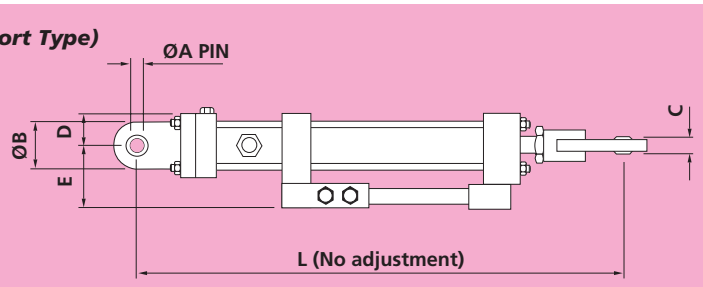

Fig. 517 Snubber (Adjustable Strut Type)

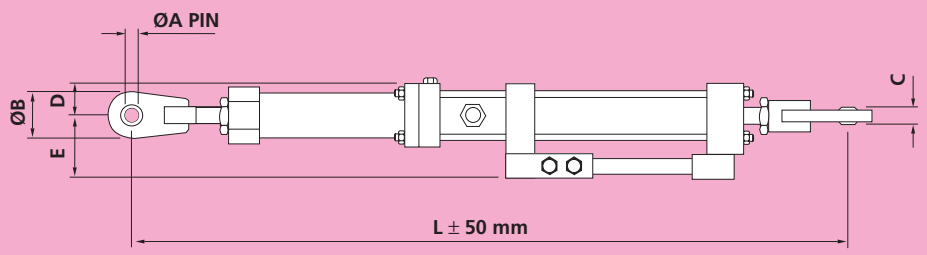

Snubber Size Fig.516- or Fig.517-	Cylinder Bore Size in	Cylinder Stroke in	Dia. A in	Dia. B in	C in	D in	E in	Fig. 516 Short Snubber L (in) Fully Closed	Fig. 516 Short Snubber L (in) Mid Stroke	Fig. 516 Short Snubber L (in) Fully Ext.	Fig. 516 Short Snubber Weight lbs	Fig. 517 Adjustable Strut Snubber L (in) Min. Fully Closed	Fig. 517 Adjustable Strut Snubber L (in) Min. Fully Ext.	Fig. 517 Adjustable Strut Snubber L (in) Max. Fully Closed	Fig. 517 Adjustable Strut Snubber Weight @ L = Min. lbs	Fig. 517 Adjustable Strut Snubber Weight @ L = Max lbs
1-5	3/4	5	0.39	1.50	0.35	1.125	2.875	17.41	19.91	22.41	13	24.7	29.7	79	14	17
1-10	3/4	10	0.39	1.50	0.35	1.125	2.875	24.91	29.91	34.91	15	32.2	42.2	79	16	19
2-5	1	5	0.39	1.50	0.35	1.375	3.125	18.22	20.72	23.22	17	25.8	30.8	98	18	25
2-10	1	10	0.39	1.50	0.35	1.375	3.125	25.72	30.72	35.72	20	33.3	43.3	98	21	27
3-5	1.1/2	5	0.59	1.97	0.47	1.25	3.000	20.41	22.91	25.41	22	28.5	33.5	177	24	61
3-10	1.1/2	10	0.59	1.97	0.47	1.25	3.000	27.91	32.91	37.91	27	36.0	46.0	157	29	59
3-15	1.1/2	15	0.59	1.97	0.47	1.25	3.000	35.41	42.91	50.41	32	43.5	58.5	157	34	62
4-5	2	5	0.79	2.76	0.63	1.5	3.250	22.54	25.04	27.54	31	30.8	35.8	197	34	84
4-10	2	10	0.79	2.76	0.63	1.5	3.250	30.04	35.04	40.04	38	38.3	48.3	197	41	89
4-15	2	15	0.79	2.76	0.63	1.5	3.250	37.54	45.04	52.54	45	45.8	60.8	197	48	94
4-20	2	20	0.79	2.76	0.63	1.5	3.250	45.04	55.04	65.04	52	53.3	73.3	177	55	93
5-5	2.1/2	5	0.98	3.23	0.79	1.75	3.500	24.31	26.81	29.31	43	33.2	38.2	236	48	133
5-10	2.1/2	10	0.98	3.23	0.79	1.75	3.500	31.81	36.81	41.81	53	40.7	50.7	236	58	140
5-15	2.1/2	15	0.98	3.23	0.79	1.75	3.500	39.31	46.81	54.31	63	48.2	63.2	236	68	147
5-20	2.1/2	20	0.98	3.23	0.79	1.75	3.500	46.81	56.81	66.81	74	55.7	75.7	236	78	154
6-5	3.1/4	5	1.38	4.33	0.98	2.25	4.000	29.17	31.67	34.17	83	38.4	43.4	236	90	217
6-10	3.1/4	10	1.38	4.33	0.98	2.25	4.000	37.05	42.05	47.05	100	46.3	56.3	236	107	229
6-15	3.1/4	15	1.38	4.33	0.98	2.25	4.000	44.92	52.42	59.92	117	54.2	69.2	236	124	241
6-20	3.1/4	20	1.38	4.33	0.98	2.25	4.000	52.80	62.80	72.80	134	62.1	82.1	236	141	253
7-5	4	5	1.57	5.12	1.10	2.5	4.250	30.37	32.87	35.37	106	40.6	45.6	236	117	284
7-10	4	10	1.57	5.12	1.10	2.5	4.250	37.87	42.87	47.87	124	48.1	58.1	236	135	296
7-15	4	15	1.57	5.12	1.10	2.5	4.250	45.37	52.87	60.37	142	55.6	70.6	236	153	308
7-20	4	20	1.57	5.12	1.10	2.5	4.250	52.87	62.87	72.87	161	63.1	83.1	236	171	320
8-5	5	5	1.97	5.91	1.38	3.25	5.000	34.11	36.61	39.11	195	45.1	50.1	236	213	454
8-10	5	10	1.97	5.91	1.38	3.25	5.000	41.61	46.61	51.61	231	52.6	62.6	236	250	481
8-15	5	15	1.97	5.91	1.38	3.25	5.000	49.11	56.61	64.11	267	60.1	75.1	236	286	508
8-20	5	20	1.97	5.91	1.38	3.25	5.000	56.61	66.61	76.61	304	67.6	87.6	236	322	535
9-5	6	5	2.76	8.66	1.93	3.75	5.500	40.35	42.85	45.35	312	52.9	57.9	236	349	670
9-10	6	10	2.76	8.66	1.93	3.75	5.500	47.85	52.85	57.85	359	60.4	70.4	236	396	704
9-15	6	15	2.76	8.66	1.93	3.75	5.500	55.35	62.85	70.35	406	67.9	82.9	236	442	738
9-20	6	20	2.76	8.66	1.93	3.75	5.500	62.85	72.85	82.85	452	75.4	95.4	236	489	771
10-5	8	5	3.15	9.84	2.17	4.75	6.500	46.93	49.43	51.93	611	60.2	65.2	236	664	1089
10-10	8	10	3.15	9.84	2.17	4.75	6.500	54.43	59.43	64.43	689	67.7	77.7	236	742	1149
10-15	8	15	3.15	9.84	2.17	4.75	6.500	61.93	69.43	76.93	767	75.2	90.2	236	820	1210
10-20	8	20	3.15	9.84	2.17	4.75	6.500	69.43	79.43	89.43	845	82.7	102.7	236	899	1270
11-5	10	5	3.54	11.02	2.36	6.312	8.062	53.01	55.51	58.01	1104	66.9	71.9	236	1199	1820
11-10	10	10	3.54	11.02	2.36	6.312	8.062	60.01	65.01	70.01	1215	73.9	83.9	236	1311	1907
11-15	10	15	3.54	11.02	2.36	6.312	8.062	67.01	74.51	82.01	1327	80.9	95.9	236	1422	1993
11-20	10	20	3.54	11.02	2.36	6.312	8.062	74.01	84.01	94.01	1439	87.9	107.9	236	1534	2079

LOAD CAPACITIES OF HYDRAULIC SNUBBERS IN TENSION AND COMPRESSION

				Fig. 516 Short Snubber		Fig. 517 Adjustable Strut Snubber														
Snubber Size Fig. 516 – or Fig. 517 –	Cylinder Bore Size in	Cylinder Stroke in	Max. Rated Tensile Load lbs	Closed Centres (L) in	Max. Rated Comp. Load lbs	Min. Closed Centres (L) in	Max. Closed Centres (L) in	Max. Closed Centres for Max. Comp. Load = Full Rated Tensile Load in	Max. Comp. Load at Closed Crs. = Min. lbs	Max. Comp. Load at Closed Crs. = 39 in lbs	Max. Comp. Load at Closed Crs. = 59 in lbs	Max. Comp. Load at Closed Crs. = 79 in lbs	Max. Comp. Load at Closed Crs. = 98 in lbs	Max. Comp. Load at Closed Crs. = 118 in lbs	Max. Comp. Load at Closed Crs. = 138 in lbs	Max. Comp. Load at Closed Crs. = 157 in lbs	Max. Comp. Load at Closed Crs. = 177 in lbs	Max. Comp. Load at Closed Crs. = 197 in lbs	Max. Comp. Load at Closed Crs. = 217 in lbs	Max. Comp. Load at Closed Crs. = 236 in lbs
1-5	3/4	5	738	17.41	738	24.7	79	43.3	738	738	466	272								
1-10	3/4	10	738	24.91	465	32.2	79	n/a	465	446	398	222								
2-5	1	5	1434	18.22	1434	25.8	98	47.2	1434	1434	1031	629	396							
2-10	1	10	1434	25.72	1165	33.3	98	n/a	1165	1133	865	538	335							
3-5	1 1/2	5	3900	20.41	3900	28.5	177	78.7	3900	3900	3900	3900	2866	1988	1510	1079	855			
3-10	1 1/2	10	3900	27.91	2468	36.0	157	n/a	2468	2432	2287	2172	2071	1830	1378	1001				
3-15	1 1/2	15	3900	35.41	1253	43.5	157	n/a	1253		1159	1064	982	908	838	772				
4-5	2	5	7000	22.54	7000	30.8	197	74.8	7000	7000	7000	6785	4510	3145	2379	1873	1457	1106		
4-10	2	10	7000	30.04	6285	38.3	197	n/a	6285	6257	6030	5856	3983	2935	2187	1725	1266	1028		
4-15	2	15	7000	37.54	3597	45.8	197	n/a	3597		3482	3325	3194	2581	1991	1573	1178	965		
4-20	2	20	7000	45.04	2180	53.3	177	n/a	2180		2147	2009	1894	1793	1700	1406	1087			
5-5	2 1/2	5	11000	24.31	11000	33.2	236	90.6	11000	11000	11000	11000	9780	7036	5340	4074	3226	2631	2118	1664
5-10	2 1/2	10	11000	31.81	11000	40.7	236	82.7	11000		11000	11000	8812	6519	4857	3809	2978	2472	1953	1577
5-15	2 1/2	15	11000	39.31	7941	48.2	236	n/a	7941		7756	7505	7294	5801	4370	3537	2727	2291	1887	1478
5-20	2 1/2	20	11000	46.81	5155	55.7	236	n/a	5155		5102	4870	4678	4509	4074	3259	2633	2124	1639	1377
6-5	3 1/4	5	17600	29.17	17600	38.4	236	106.3	17600	17600	17600	17600	17600	15082	11542	8971	7048	5753	4778	3973
6-10	3 1/4	10	17600	37.05	17600	46.3	236	102.4	17600		17600	17600	17600	13906	10441	8221	6628	5360	4406	3759
6-15	3 1/4	15	17600	44.92	17600	54.2	236	94.5	17600		17600	17600	17216	12755	9627	7748	6195	4959	4031	3511
6-20	3 1/4	20	17600	52.80	17325	62.1	236	n/a	17325			16892	15865	11682	9136	6986	5749	4551	3914	3283
7-5	4	5	28200	30.37	28200	40.6	236	118.1	28200		28200	28200	28200	28200	22714	17947	14074	11474	9712	7994
7-10	4	10	28200	37.87	28200	48.1	236	114.2	28200		28200	28200	28200	27226	21223	16522	13502	10935	9199	7507
7-15	4	15	28200	45.37	28200	55.6	236	110.2	28200		28200	28200	28200	25266	19719	15493	12523	10387	8679	7017
7-20	4	20	28200	52.87	27701	63.1	236	n/a	27701			27135	26537	23410	18262	14851	11929	9831	8155	6888
8-5	5	5	44000	34.11	44000	45.1	236	149.6	44000		44000	44000	44000	44000	44000	41603	34006	27704	23262	20051
8-10	5	10	44000	41.61	44000	52.6	236	145.7	44000		44000	44000	44000	44000	44000	39275	31792	26752	22370	18640
8-15	5	15	44000	49.11	44000	60.1	236	137.8	44000			44000	44000	44000	44000	36294	30117	25171	20872	17770
8-20	5	20	44000	56.61	44000	67.6	236	129.9	44000			44000	44000	44000	42021	34533	28401	23554	19905	16869
9-5	6	5	63600	40.35	63600	52.9	236	185.0	63600		63600	63600	63600	63600	63600	63600	63600	57900	49108	41257
9-10	6	10	63600	47.85	63600	60.4	236	177.2	63600			63600	63600	63600	63600	63600	63600	54796	46121	39977
9-15	6	15	63600	55.35	63600	67.9	236	173.2	63600			63600	63600	63600	63600	63600	61095	51643	44702	37854
9-20	6	20	63600	62.85	63600	75.4	236	165.4	63600			63600	63600	63600	63600	63600	57811	49246	42428	35703
10-5	8	5	113000	46.93	113000	60.2	236	181.1	113000			113000	113000	113000	113000	113000	113000	103507	90227	78202
10-10	8	10	113000	54.43	113000	67.7	236	173.2	113000			113000	113000	113000	113000	113000	112964	97572	85636	73808
10-15	8	15	113000	61.93	113000	75.2	236	169.3	113000			113000	113000	113000	113000	113000	107939	93755	80931	70422
10-20	8	20	113000	69.43	113000	82.7	236	161.4	113000				113000	113000	113000	113000	103152	88970	77285	66929
11-5	10	5	187900	53.01	187900	66.9	236	220.5	187900			187900	187900	187900	187900	187900	187900	187900	187900	175112
11-10	10	10	187900	60.01	187900	73.9	236	212.6	187900			187900	187900	187900	187900	187900	187900	187900	185944	169464
11-15	10	15	187900	67.01	187900	80.9	236	204.7	187900				187900	187900	187900	187900	187900	187900	179849	163578
11-20	10	20	187900	74.01	187900	87.9	236	196.9	187900				187900	187900	187900	187900	187900	187900	173973	156036

CLAMPS FOR RIGID STRUTS AND SNUBBERS N.B. 0.5" / 15mm

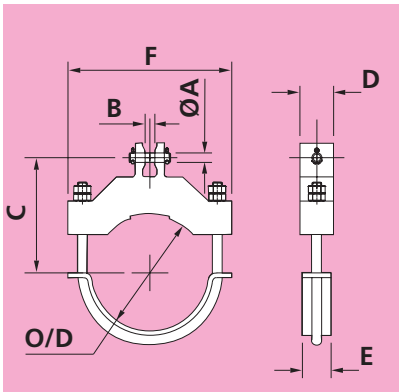

Type 513 Clamp

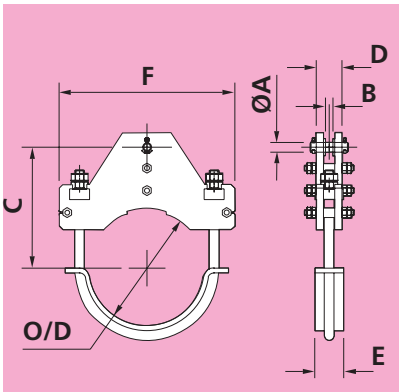

Type 514 Clamp

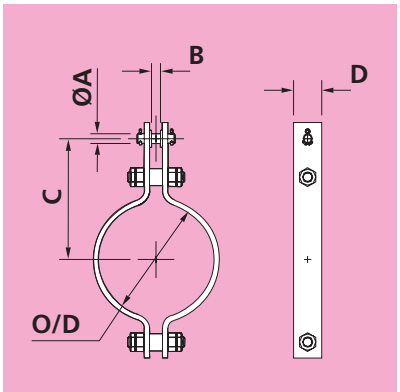

Type 515 Clamp

Fig. No.	Pipe O/D	Max. Pipe Temp	Max. Load			Dia. A	B	C		D	E	F	Clamp Weight		
	mm	°C	kgf	kN	lbs	mm	mm	mm	in	mm	mm	mm	kgf	N	lbs
513-15-1-400	21.3	400	423	4.15	933	10	9	85	3.35	20	20	65	0.6	6	1.3
515-15-1-400	21.3	400	423	4.15	933	10	9	85	3.35	40			0.7	6	1.4
515-15-2-400	21.3	400	985	9.66	2172	10	9	85	3.35	40			0.7	6	1.4
513-15-1-490	21.3	490	423	4.15	933	10	9	85	3.35	20	20	65	0.6	6	1.3
515-15-1-490	21.3	490	423	4.15	933	10	9	85	3.35	40			0.6	6	1.4
515-15-2-490	21.3	490	985	9.66	2172	10	9	85	3.35	40			0.6	6	1.4
513-15-1-530	21.3	530	423	4.15	933	10	9	85	3.35	20	30	72	0.7	7	1.5
515-15-1-530	21.3	530	423	4.15	933	10	9	85	3.35	40			0.6	6	1.4
515-15-2-530	21.3	530	985	9.66	2172	10	9	85	3.35	40			0.6	6	1.4
513-15-1-570	21.3	570	423	4.15	933	10	9	85	3.35	25	30	83	1.0	10	2.2
515-15-1-570	21.3	570	423	4.15	933	10	9	85	3.35	40			0.6	6	1.4
515-15-2-570	21.3	570	985	9.66	2172	10	9	85	3.35	40			0.6	6	1.4

CLAMPS FOR RIGID STRUTS AND SNUBBERS N.B. 0.75" / 20mm

Fig. No.	Pipe O/D	Max. Pipe Temp	Max. Load			Dia. A	B	C		D	E	F	Clamp Weight		
	mm	°C	kgf	kN	lbs	mm	mm	mm	in	mm	mm	mm	kgf	N	lbs
513-20-1-400	26.7	400	423	4.15	933	10	9	87	3.43	20	20	70	0.6	6	1.3
515-20-1-400	26.7	400	423	4.15	933	10	9	85	3.35	40			0.7	7	1.5
513-20-2-400	26.7	400	985	9.66	2172	10	9	87	3.43	20	30	77	0.7	7	1.6
515-20-2-400	26.7	400	985	9.66	2172	10	9	85	3.35	40			0.7	7	1.5
513-20-1-490	26.7	490	423	4.15	933	10	9	87	3.43	20	20	70	0.6	6	1.3
515-20-1-490	26.7	490	423	4.15	933	10	9	85	3.35	40			0.7	7	1.5
513-20-2-490	26.7	490	985	9.66	2172	10	9	87	3.43	20	30	77	0.7	7	1.6
515-20-2-490	26.7	490	985	9.66	2172	10	9	85	3.35	40			0.7	7	1.5
513-20-1-530	26.7	530	423	4.15	933	10	9	87	3.43	20	30	77	0.7	7	1.5
515-20-1-530	26.7	530	423	4.15	933	10	9	85	3.35	40			0.7	7	1.5
513-20-2-530	26.7	530	985	9.66	2172	10	9	87	3.43	25	30	88	1.0	10	2.3
515-20-2-530	26.7	530	985	9.66	2172	10	9	85	3.35	40			0.7	7	1.5
513-20-1-570	26.7	570	423	4.15	933	10	9	87	3.43	25	30	88	1.0	10	2.2
515-20-1-570	26.7	570	423	4.15	933	10	9	85	3.35	40			0.7	7	1.5
513-20-2-570	26.7	570	985	9.66	2172	10	9	87	3.43	30	40	102	1.5	15	3.4
515-20-2-570	26.7	570	985	9.66	2172	10	9	85	3.35	50			1.3	13	3.0

CLAMPS FOR RIGID STRUTS AND SNUBBERS N.B. 1" / 25mm

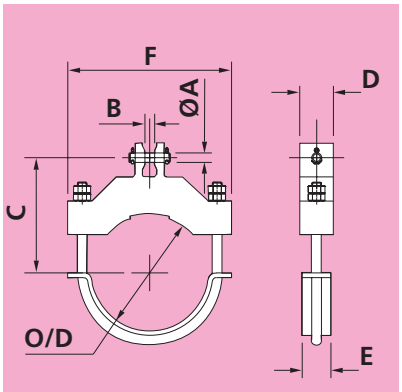

Type 513 Clamp

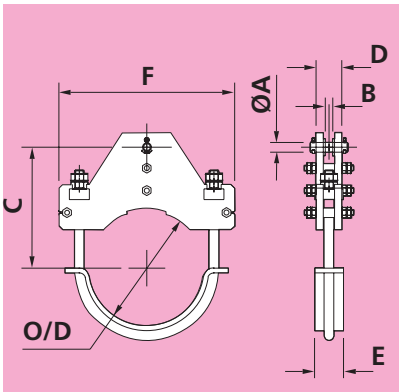

Type 514 Clamp

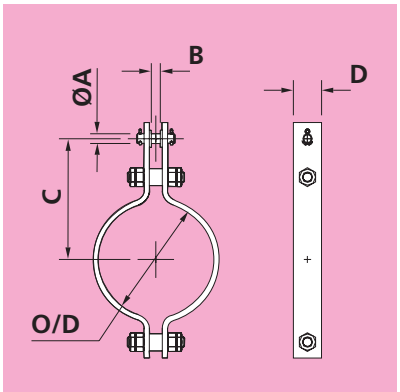

Type 515 Clamp

Fig. No.	Pipe O/D	Max. Pipe Temp	Max. Load			Dia. A	B	C		D	E	F	Clamp Weight		
	mm	°C	kgf	kN	lbs	mm	mm	mm	in	mm	mm	mm	kgf	N	lbs
513-25-1-400	33.4	400	423	4.15	933	10	9	106	4.17	20	20	78	0.7	7	1.6
515-25-1-400	33.4	400	423	4.15	933	10	9	105	4.13	40			0.8	8	1.7
513-25-2-400	33.4	400	985	9.66	2172	10	9	106	4.17	20	30	85	0.9	9	2.0
515-25-2-400	33.4	400	985	9.66	2172	10	9	105	4.13	40			0.8	8	1.7
513-25-1-490	33.4	490	423	4.15	933	10	9	106	4.17	20	20	78	0.7	7	1.6
515-25-1-490	33.4	490	423	4.15	933	10	9	105	4.13	40			0.8	8	1.7
513-25-2-490	33.4	490	985	9.66	2172	10	9	106	4.17	20	30	85	0.9	9	2.0
515-25-2-490	33.4	490	985	9.66	2172	10	9	105	4.13	40			0.8	8	1.7
513-25-1-530	33.4	530	423	4.15	933	10	9	106	4.17	20	30	85	0.9	8	1.9
515-25-1-530	33.4	530	423	4.15	933	10	9	105	4.13	40			0.8	8	1.7
513-25-2-530	33.4	530	985	9.66	2172	10	9	106	4.17	25	30	96	1.3	12	2.8
515-25-2-530	33.4	530	985	9.66	2172	10	9	105	4.13	50			1.6	15	3.4
513-25-1-570	33.4	570	423	4.15	933	10	9	106	4.17	25	30	96	1.2	12	2.7
515-25-1-570	33.4	570	423	4.15	933	10	9	105	4.13	40			0.8	8	1.7
513-25-2-570	33.4	570	985	9.66	2172	10	9	106	4.17	30	40	110	1.8	18	4.0
515-25-2-570	33.4	570	985	9.66	2172	10	9	105	4.13	50			1.6	15	3.4

CLAMPS FOR RIGID STRUTS AND SNUBBERS N.B. 1.25" / 32mm

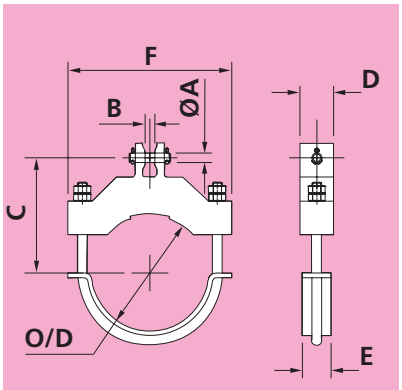

Type 513 Clamp

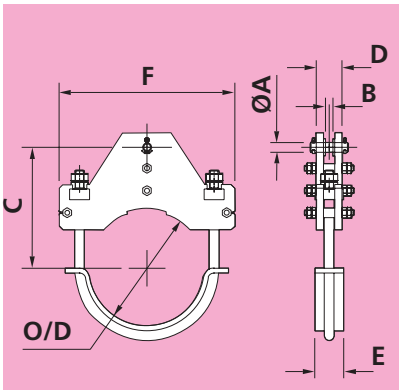

Type 514 Clamp

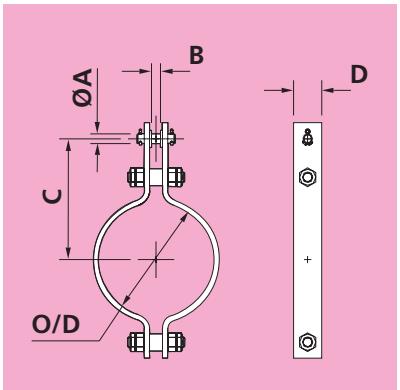

Type 515 Clamp

Fig. No.	Pipe O/D	Max. Pipe Temp	Max. Load			Dia. A	B	C		D	E	F	Clamp Weight		
	mm	°C	kgf	kN	lbs	mm	mm	mm	in	mm	mm	mm	kgf	N	lbs
513-32-1-400	42.2	400	423	4.15	933	10	9	110	4.33	20	20	86	0.8	8	1.8
515-32-1-400	42.2	400	423	4.15	933	10	9	110	4.33	40			0.8	8	1.8
513-32-2-400	42.2	400	985	9.66	2172	10	9	110	4.33	20	30	93	1.0	10	2.2
515-32-2-400	42.2	400	985	9.66	2172	10	9	110	4.33	50			1.7	16	3.6
513-32-3-400	42.2	400	2125	20.8	4684	15	12	117	4.61	30	40	118	2.2	21	4.8
515-32-3-400	42.2	400	2125	20.8	4684	15	12	115	4.53	50			1.8	18	4.0
513-32-1-490	42.2	490	423	4.15	933	10	9	110	4.33	20	20	86	0.8	8	1.8
515-32-1-490	42.2	490	423	4.15	933	10	9	110	4.33	40			0.8	8	1.8
513-32-2-490	42.2	490	985	9.66	2172	10	9	110	4.33	20	30	93	1.0	10	2.2
515-32-2-490	42.2	490	985	9.66	2172	10	9	110	4.33	50			1.7	16	3.6
513-32-3-490	42.2	490	2125	20.8	4684	15	12	117	4.61	30	40	118	2.2	21	4.8
515-32-3-490	42.2	490	2125	20.8	4684	15	12	115	4.53	50			1.8	18	4.0
513-32-1-530	42.2	530	423	4.15	933	10	9	110	4.33	20	30	93	1.0	9	2.1
515-32-1-530	42.2	530	423	4.15	933	10	9	110	4.33	40			0.8	8	1.8
513-32-2-530	42.2	530	985	9.66	2172	10	9	110	4.33	25	30	104	1.4	14	3.1
515-32-2-530	42.2	530	985	9.66	2172	10	9	110	4.33	50			1.7	16	3.6
513-32-3-530	42.2	530	2125	20.8	4684	15	12	117	4.61	40	50	132	3.2	31	7.0
515-32-3-530	42.2	530	2125	20.8	4684	15	12	115	4.53	50			1.8	18	4.0
513-32-1-570	42.2	570	423	4.15	933	10	9	110	4.33	25	30	104	1.3	13	3.0
515-32-1-570	42.2	570	423	4.15	933	10	9	110	4.33	40			0.8	8	1.8
513-32-2-570	42.2	570	985	9.66	2172	10	9	110	4.33	30	40	118	2.0	20	4.4
515-32-2-570	42.2	570	985	9.66	2172	10	9	110	4.33	50			1.7	16	3.6
513-32-3-570	42.2	570	2125	20.8	4684	15	12	117	4.61	50	50	150	4.6	45	10.1
515-32-3-570	42.2	570	2125	20.8	4684	15	12	115	4.53	70			2.9	29	6.4

CLAMPS FOR RIGID STRUTS AND SNUBBERS N.B. 1.5" / 40mm

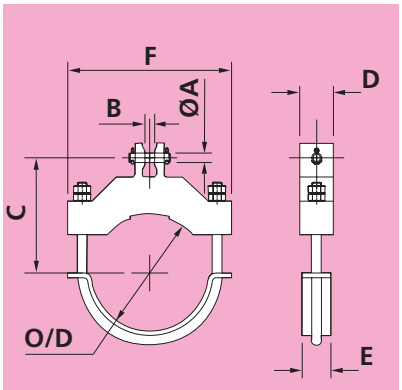

Type 513 Clamp

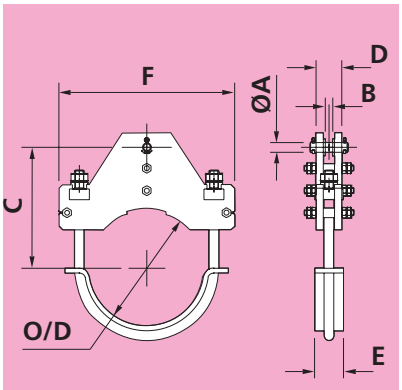

Type 514 Clamp

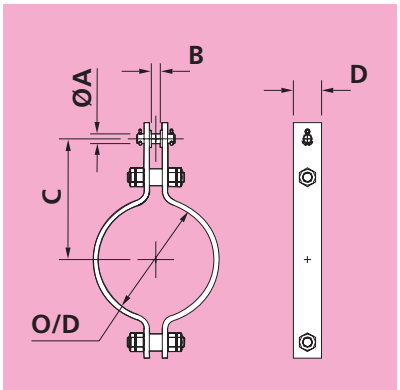

Type 515 Clamp

Fig. No.	Pipe O/D	Max. Pipe Temp	Max. Load			Dia. A	B	C		D	E	F	Clamp Weight		
	mm	°C	kgf	kN	lbs	mm	mm	mm	in	mm	mm	mm	kgf	N	lbs
513-40-1-400	48.3	400	423	4.15	933	10	9	113	4.45	20	20	92	0.9	9	2.0
515-40-1-400	48.3	400	423	4.15	933	10	9	115	4.53	40			0.9	9	1.9
513-40-2-400	48.3	400	985	9.66	2172	10	9	113	4.45	20	30	99	1.1	11	2.4
515-40-2-400	48.3	400	985	9.66	2172	10	9	115	4.53	50			1.8	17	3.9
513-40-3-400	48.3	400	2125	20.8	4684	15	12	120	4.72	30	40	124	2.3	22	5.1
515-40-3-400	48.3	400	2125	20.8	4684	15	12	120	4.72	50			1.9	19	4.2
513-40-1-490	48.3	490	423	4.15	933	10	9	113	4.45	20	20	92	0.9	9	2.0
515-40-1-490	48.3	490	423	4.15	933	10	9	115	4.53	40			0.9	9	1.9
513-40-2-490	48.3	490	985	9.66	2172	10	9	113	4.45	20	30	99	1.1	11	2.4
515-40-2-490	48.3	490	985	9.66	2172	10	9	115	4.53	50			1.8	17	3.9
513-40-3-490	48.3	490	2125	20.8	4684	15	12	120	4.72	30	40	124	2.3	22	5.1
515-40-3-490	48.3	490	2125	20.8	4684	15	12	120	4.72	50			1.9	19	4.2
513-40-1-530	48.3	530	423	4.15	933	10	9	113	4.45	20	30	99	1.0	10	2.3
515-40-1-530	48.3	530	423	4.15	933	10	9	115	4.53	40			0.9	9	1.9
513-40-2-530	48.3	530	985	9.66	2172	10	9	113	4.45	25	30	110	1.5	15	3.3
515-40-2-530	48.3	530	985	9.66	2172	10	9	115	4.53	50			1.8	17	3.9
513-40-3-530	48.3	530	2125	20.8	4684	15	12	120	4.72	40	50	138	3.3	33	7.4
515-40-3-530	48.3	530	2125	20.8	4684	15	12	120	4.72	50			1.9	19	4.2
513-40-1-570	48.3	570	423	4.15	933	10	9	113	4.45	25	30	110	1.5	14	3.2
515-40-1-570	48.3	570	423	4.15	933	10	9	115	4.53	50			1.8	17	3.9
513-40-2-570	48.3	570	985	9.66	2172	10	9	113	4.45	30	40	124	2.1	21	4.7
515-40-2-570	48.3	570	985	9.66	2172	10	9	115	4.53	50			1.8	17	3.9
513-40-3-570	48.3	570	2125	20.8	4684	15	12	120	4.72	50	50	156	4.8	47	10.7
515-40-3-570	48.3	570	2125	20.8	4684	15	12	120	4.72	70			3.1	30	6.8

CLAMPS FOR RIGID STRUTS AND SNUBBERS N.B. 2" / 50mm

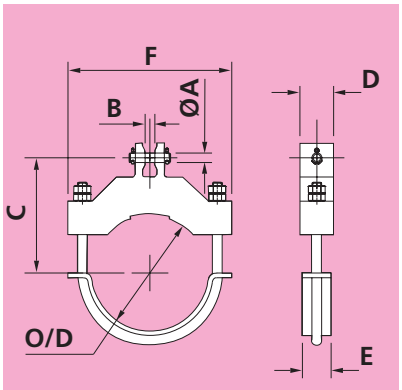

Type 513 Clamp

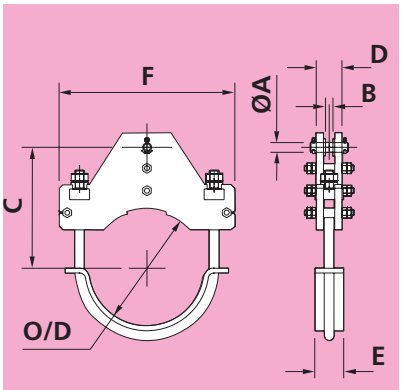

Type 514 Clamp

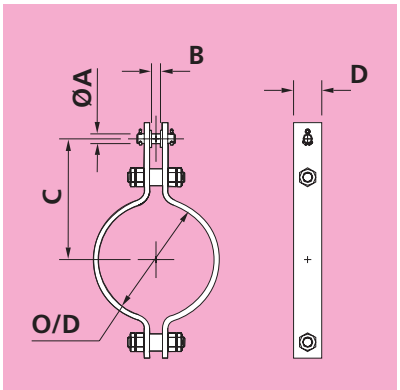

Type 515 Clamp

Fig. No.	Pipe O/D	Max. Pipe Temp	Max. Load			Dia. A	B	C		D	E	F	Clamp Weight		
	mm	°C	kgf	kN	lbs	mm	mm	mm	in	mm	mm	mm	kgf	N	lbs
513-50-1-400	60.3	400	423	4.15	933	10	9	119	4.69	20	20	104	1.1	10	2.3
514-50-1-400	60.3	400	423	4.15	933	10	9	119	4.69	36	20	150	1.9	18	4.1
515-50-1-400	60.3	400	423	4.15	933	10	9	120	4.72	40			0.9	9	2.0
513-50-2-400	60.3	400	985	9.66	2172	10	9	119	4.69	20	30	111	1.3	12	2.8
515-50-2-400	60.3	400	985	9.66	2172	10	9	120	4.72	50			1.9	18	4.1
513-50-3-400	60.3	400	2125	20.8	4684	15	12	126	4.96	30	40	136	2.6	26	5.7
515-50-3-400	60.3	400	2125	20.8	4684	15	12	125	4.92	50			2.2	21	4.8
513-50-4-400	60.3	400	4293	42.1	9465	20	16	137	5.39	40	50	150	4.2	41	9.3
515-50-4-400	60.3	400	4293	42.1	9465	20	16	135	5.31	70			4.0	40	8.9
513-50-1-490	60.3	490	423	4.15	933	10	9	119	4.69	20	20	104	1.1	10	2.3
514-50-1-490	60.3	490	423	4.15	933	10	9	119	4.69	36	20	150	1.9	19	4.2
515-50-1-490	60.3	490	423	4.15	933	10	9	120	4.72	40			0.9	9	2.0
513-50-2-490	60.3	490	985	9.66	2172	10	9	119	4.69	20	30	111	1.3	12	2.8
515-50-2-490	60.3	490	985	9.66	2172	10	9	120	4.72	50			1.9	18	4.1
513-50-3-490	60.3	490	2125	20.8	4684	15	12	126	4.96	30	40	136	2.6	26	5.7
515-50-3-490	60.3	490	2125	20.8	4684	15	12	125	4.92	50			2.0	20	4.4
513-50-4-490	60.3	490	4293	42.1	9465	20	16	137	5.39	40	50	150	4.2	41	9.3
515-50-4-490	60.3	490	4293	42.1	9465	20	16	135	5.31	70			3.8	37	8.3
513-50-1-530	60.3	530	423	4.15	933	10	9	119	4.69	20	30	111	1.2	12	2.7
514-50-1-530	60.3	530	423	4.15	933	10	9	119	4.69	36	30	152	2.0	20	4.5
515-50-1-530	60.3	530	423	4.15	933	10	9	120	4.72	40			0.9	9	2.0
513-50-2-530	60.3	530	985	9.66	2172	10	9	119	4.69	25	30	122	1.7	17	3.8
514-50-2-530	60.3	530	985	9.66	2172	10	9	119	4.69	39	30	166	2.4	24	5.3
515-50-2-530	60.3	530	985	9.66	2172	10	9	120	4.72	50			1.9	18	4.1
513-50-3-530	60.3	530	2125	20.8	4684	15	12	126	4.96	40	50	150	3.7	37	8.2
515-50-3-530	60.3	530	2125	20.8	4684	15	12	125	4.92	60			2.4	23	5.3
513-50-4-530	60.3	530	4293	42.1	9465	20	16	137	5.39	50	50	168	5.9	58	13.1
515-50-4-530	60.3	530	4293	42.1	9465	20	16	135	5.31	80			4.3	42	9.4
513-50-1-570	60.3	570	423	4.15	933	10	9	119	4.69	25	30	122	1.7	16	3.7
514-50-1-570	60.3	570	423	4.15	933	10	9	119	4.69	36	30	158	2.4	24	5.3
515-50-1-570	60.3	570	423	4.15	933	10	9	120	4.72	50			1.9	18	4.1
513-50-2-570	60.3	570	985	9.66	2172	10	9	119	4.69	30	40	136	2.4	24	5.4
514-50-2-570	60.3	570	985	9.66	2172	10	9	119	4.69	39	40	170	3.4	33	7.4
515-50-2-570	60.3	570	985	9.66	2172	10	9	120	4.72	50			1.9	18	4.1
513-50-3-570	60.3	570	2125	20.8	4684	15	12	126	4.96	50	50	168	5.4	53	11.9
515-50-3-570	60.3	570	2125	20.8	4684	15	12	125	4.92	70			3.3	33	7.4
513-50-4-570	60.3	570	4293	42.1	9465	20	16	137	5.39	60	70	189	8.7	85	19.1
515-50-4-570	60.3	570	4293	42.1	9465	20	16	135	5.31	80			5.4	53	11.8

CLAMPS FOR RIGID STRUTS AND SNUBBERS N.B. 2.5" / 65mm

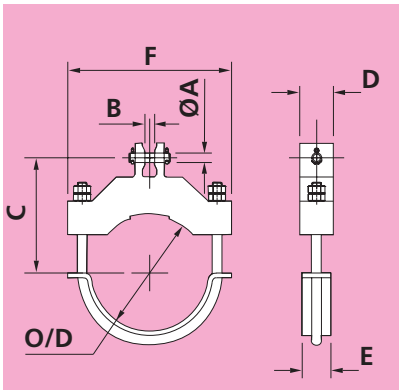

Type 513 Clamp

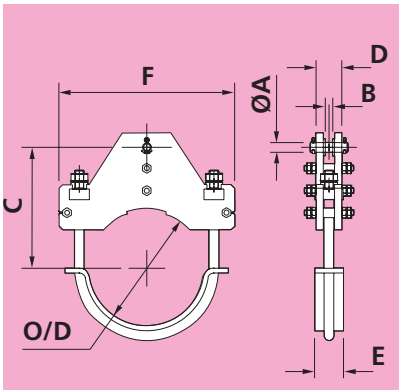

Type 514 Clamp

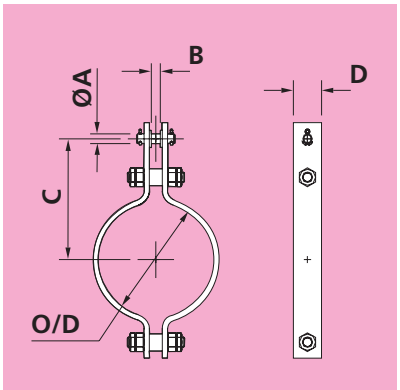

Type 515 Clamp

Fig. No.	Pipe O/D	Max. Pipe Temp	Max. Load			Dia. A	B	C		D	E	F	Clamp Weight		
	mm	°C	kgf	kN	lbs	mm	mm	mm	in	mm	mm	mm	kgf	N	lbs
513-65-1-400	73	400	423	4.15	933	10	9	128	5.04	20	20	122	1.3	13	2.9
514-65-1-400	73	400	423	4.15	933	10	9	128	5.04	36	20	168	2.3	23	5.1
515-65-1-400	73	400	423	4.15	933	10	9	125	4.92	40			1.0	10	2.2
513-65-2-400	73	400	985	9.66	2172	10	9	128	5.04	20	30	129	1.5	15	3.4
514-65-2-400	73	400	985	9.66	2172	10	9	128	5.04	39	30	178	2.7	26	5.9
515-65-2-400	73	400	985	9.66	2172	10	9	125	4.92	50			2.1	20	4.5
513-65-3-400	73	400	2125	20.8	4684	15	12	135	5.31	30	40	154	3.1	30	6.8
515-65-3-400	73	400	2125	20.8	4684	15	12	130	5.12	60			2.8	27	6.1
513-65-4-400	73	400	4293	42.1	9465	20	16	146	5.75	40	50	168	4.9	48	10.9
515-65-4-400	73	400	4293	42.1	9465	20	16	140	5.51	80			4.9	48	10.8
513-65-5-400	73	400	6324	62	13942	25	20	153	6.02	50	50	186	7.4	73	16.4
513-65-1-490	73	490	423	4.15	933	10	9	128	5.04	20	20	122	1.3	13	2.9
514-65-1-490	73	490	423	4.15	933	10	9	128	5.04	36	20	168	2.3	23	5.2
515-65-1-490	73	490	423	4.15	933	10	9	125	4.92	40			1.0	10	2.2
513-65-2-490	73	490	985	9.66	2172	10	9	128	5.04	20	30	129	1.5	15	3.4
514-65-2-490	73	490	985	9.66	2172	10	9	128	5.04	39	30	178	2.7	26	5.9
515-65-2-490	73	490	985	9.66	2172	10	9	125	4.92	50			2.1	20	4.5
513-65-3-490	73	490	2125	20.8	4684	15	12	135	5.31	30	40	154	3.1	30	6.8
515-65-3-490	73	490	2125	20.8	4684	15	12	130	5.12	60			2.6	25	5.7
513-65-4-490	73	490	4293	42.1	9465	20	16	146	5.75	40	50	168	4.9	48	10.9
515-65-4-490	73	490	4293	42.1	9465	20	16	140	5.51	80			4.6	45	10.2
513-65-5-490	73	490	6324	62	13942	25	20	153	6.02	50	50	186	7.4	73	16.4
513-65-1-530	73	530	423	4.15	933	10	9	128	5.04	20	30	129	1.5	15	3.3
514-65-1-530	73	530	423	4.15	933	10	9	128	5.04	36	30	170	2.5	24	5.5
515-65-1-530	73	530	423	4.15	933	10	9	125	4.92	40			1.0	10	2.2
513-65-2-530	73	530	985	9.66	2172	10	9	128	5.04	25	30	140	2.1	21	4.6
514-65-2-530	73	530	985	9.66	2172	10	9	128	5.04	39	30	184	2.7	27	6.0
515-65-2-530	73	530	985	9.66	2172	10	9	125	4.92	50			2.1	20	4.5
513-65-3-530	73	530	2125	20.8	4684	15	12	135	5.31	40	50	168	4.4	43	9.7
515-65-3-530	73	530	2125	20.8	4684	15	12	130	5.12	70			3.6	36	8.0
513-65-4-530	73	530	4293	42.1	9465	20	16	146	5.75	50	50	186	6.8	67	15.1
515-65-4-530	73	530	4293	42.1	9465	20	16	140	5.51	80			5.8	57	12.7
513-65-5-530	73	530	6324	62	13942	25	20	153	6.02	60	70	207	10.5	102	23.0
513-65-1-570	73	570	423	4.15	933	10	9	128	5.04	25	30	140	2.0	20	4.5
514-65-1-570	73	570	423	4.15	933	10	9	128	5.04	36	30	176	2.5	24	5.5
515-65-1-570	73	570	423	4.15	933	10	9	125	4.92	50			2.1	20	4.5
513-65-2-570	73	570	985	9.66	2172	10	9	128	5.04	30	40	154	2.9	28	6.4
514-65-2-570	73	570	985	9.66	2172	10	9	128	5.04	39	40	188	3.6	36	8.0
515-65-2-570	73	570	985	9.66	2172	10	9	125	4.92	50			2.1	20	4.5
513-65-3-570	73	570	2125	20.8	4684	15	12	135	5.31	50	50	186	6.2	61	13.7
515-65-3-570	73	570	2125	20.8	4684	15	12	130	5.12	80			4.4	43	9.7
513-65-4-570	73	570	4293	42.1	9465	20	16	146	5.75	60	70	207	9.8	96	21.6
515-65-4-570	73	570	4293	42.1	9465	20	16	140	5.51	100			7.2	70	15.8
513-65-5-570	73	570	6324	62	13942	25	20	153	6.02	70	80	232	14.8	145	32.6

CLAMPS FOR RIGID STRUTS AND SNUBBERS N.B. 3" / 80mm

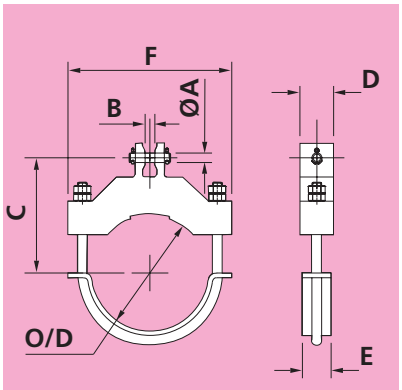

Type 513 Clamp

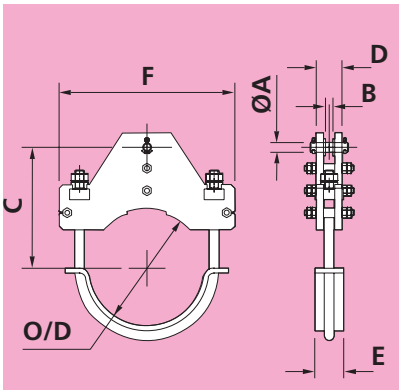

Type 514 Clamp

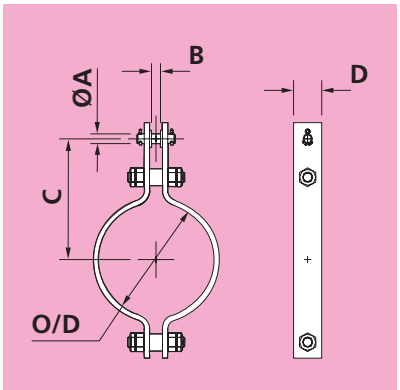

Type 515 Clamp

Fig. No.	Pipe O/D	Max. Pipe Temp	Max. Load			Dia. A	B	C		D	E	F	Clamp Weight		
	mm	°C	kgf	kN	lbs	mm	mm	mm	in	mm	mm	mm	kgf	N	lbs
513-80-1-400	88.9	400	423	4.15	933	10	9	134	5.28	20	20	134	1.5	15	3.3
514-80-1-400	88.9	400	423	4.15	933	10	9	134	5.28	36	20	180	2.0	20	4.5
515-80-1-400	88.9	400	423	4.15	933	10	9	135	5.31	40			1.1	11	2.4
513-80-2-400	88.9	400	985	9.66	2172	10	9	134	5.28	20	30	141	1.7	17	3.8
514-80-2-400	88.9	400	985	9.66	2172	10	9	134	5.28	39	30	190	2.4	23	5.3
515-80-2-400	88.9	400	985	9.66	2172	10	9	135	5.31	50			2.3	22	5.0
513-80-3-400	88.9	400	2125	20.8	4684	15	12	141	5.55	30	40	166	3.4	34	7.6
514-80-3-400	88.9	400	2125	20.8	4684	15	12	140	5.51	47	40	238	5.2	51	11.4
515-80-3-400	88.9	400	2125	20.8	4684	15	12	140	5.51	70			4.1	40	9.1
513-80-4-400	88.9	400	4293	42.1	9465	20	16	152	5.98	40	50	180	5.4	53	11.9
515-80-4-400	88.9	400	4293	42.1	9465	20	16	150	5.91	80			6.6	64	14.5
513-80-5-400	88.9	400	6324	62	13942	25	20	159	6.26	50	50	198	8.1	79	17.8
515-80-5-400	88.9	400	6324	62	13942	25	20	165	6.50	100			9.1	89	20.0
513-80-1-490	88.9	490	423	4.15	933	10	9	134	5.28	20	20	134	1.5	15	3.3
514-80-1-490	88.9	490	423	4.15	933	10	9	134	5.28	36	20	180	2.1	20	4.5
515-80-1-490	88.9	490	423	4.15	933	10	9	135	5.31	40			1.1	11	2.4
513-80-2-490	88.9	490	985	9.66	2172	10	9	134	5.28	20	30	141	1.7	17	3.8
514-80-2-490	88.9	490	985	9.66	2172	10	9	134	5.28	39	30	190	2.4	24	5.3
515-80-2-490	88.9	490	985	9.66	2172	10	9	135	5.31	50			2.3	22	5.0
513-80-3-490	88.9	490	2125	20.8	4684	15	12	141	5.55	30	40	166	3.4	34	7.6
514-80-3-490	88.9	490	2125	20.8	4684	15	12	140	5.51	47	40	238	5.2	51	11.5
515-80-3-490	88.9	490	2125	20.8	4684	15	12	140	5.51	70			3.9	38	8.6
513-80-4-490	88.9	490	4293	42.1	9465	20	16	152	5.98	40	50	180	5.4	53	11.9
515-80-4-490	88.9	490	4293	42.1	9465	20	16	150	5.91	80			6.3	61	13.8
513-80-5-490	88.9	490	6324	62	13942	25	20	159	6.26	50	50	198	8.1	79	17.8
515-80-5-490	88.9	490	6324	62	13942	25	20	155	6.10	100			8.4	82	18.5
513-80-1-530	88.9	530	423	4.15	933	10	9	134	5.28	20	30	141	1.7	17	3.7
514-80-1-530	88.9	530	423	4.15	933	10	9	134	5.28	36	30	182	2.3	22	5.1
515-80-1-530	88.9	530	423	4.15	933	10	9	135	5.31	50			2.3	22	5.0
513-80-2-530	88.9	530	985	9.66	2172	10	9	134	5.28	25	30	152	2.4	23	5.2
514-80-2-530	88.9	530	985	9.66	2172	10	9	134	5.28	39	30	196	2.8	28	6.3
515-80-2-530	88.9	530	985	9.66	2172	10	9	135	5.31	50			2.3	22	5.0
513-80-3-530	88.9	530	2125	20.8	4684	15	12	141	5.55	40	50	180	4.8	47	10.6
514-80-3-530	88.9	530	2125	20.8	4684	15	12	141	5.55	47	50	242	6.9	67	15.1
515-80-3-530	88.9	530	2125	20.8	4684	15	12	140	5.51	70			4.1	40	9.1
513-80-4-530	88.9	530	4293	42.1	9465	20	16	152	5.98	50	50	198	7.4	73	16.4
515-80-4-530	88.9	530	4293	42.1	9465	20	16	150	5.91	80			6.3	61	13.8
513-80-5-530	88.9	530	6324	62	13942	25	20	159	6.26	60	70	219	11.2	110	24.6
515-80-5-530	88.9	530	6324	62	13942	25	20	165	6.50	100			11.6	114	25.5
513-80-1-570	88.9	570	423	4.15	933	10	9	134	5.28	25	30	152	2.3	22	5.0
514-80-1-570	88.9	570	423	4.15	933	10	9	134	5.28	36	30	188	2.9	29	6.4
515-80-1-570	88.9	570	423	4.15	933	10	9	135	5.31	50			2.3	22	5.0
513-80-2-570	88.9	570	985	9.66	2172	10	9	134	5.28	30	40	166	3.3	32	7.2
514-80-2-570	88.9	570	985	9.66	2172	10	9	134	5.28	39	40	200	3.8	38	8.5
515-80-2-570	88.9	570	985	9.66	2172	10	9	135	5.31	60			2.7	26	5.9
513-80-3-570	88.9	570	2125	20.8	4684	15	12	141	5.55	50	50	198	6.8	67	15.0
514-80-3-570	88.9	570	2125	20.8	4684	15	12	153	6.02	51	50	250	9.5	93	21.0
515-80-3-570	88.9	570	2125	20.8	4684	15	12	140	5.51	80			5.9	58	13.0
513-80-4-570	88.9	570	4293	42.1	9465	20	16	152	5.98	60	70	219	10.6	104	23.5
515-80-4-570	88.9	570	4293	42.1	9465	20	16	150	5.91	100			10.4	102	22.8
513-80-5-570	88.9	570	6324	62	13942	25	20	159	6.26	70	80	244	15.8	155	34.8
515-80-5-570	88.9	570	6324	62	13942	25	20	165	6.50	100			11.6	114	25.5

CLAMPS FOR RIGID STRUTS AND SNUBBERS N.B. 3.5" / 90mm

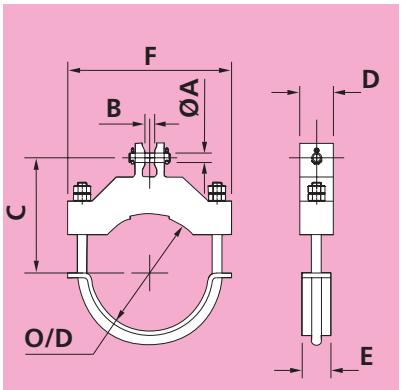

Type 513 Clamp

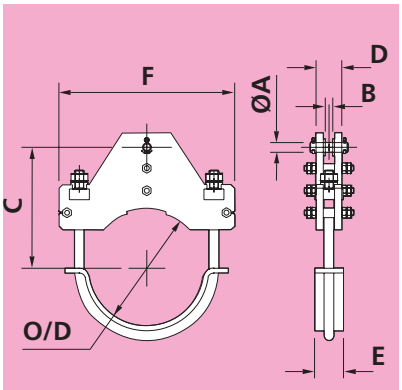

Type 514 Clamp

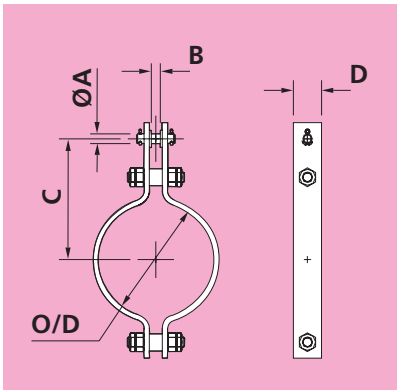

Type 515 Clamp

Fig. No.	Pipe O/D	Max. Pipe Temp	Max. Load			Dia. A	B	C		D	E	F	Clamp Weight		
	mm	°C	kgf	kN	lbs	mm	mm	mm	in	mm	mm	mm	kgf	N	lbs
513-90-1-400	101.6	400	423	4.15	933	10	9	140	5.51	20	20	146	1.7	16	3.7
514-90-1-400	101.6	400	423	4.15	933	10	9	140	5.51	36	20	192	2.6	25	5.6
515-90-1-400	101.6	400	423	4.15	933	10	9	140	5.51	40			1.2	12	2.6
513-90-2-400	101.6	400	985	9.66	2172	10	9	140	5.51	20	30	153	2.0	19	4.3
514-90-2-400	101.6	400	985	9.66	2172	10	9	140	5.51	39	30	202	2.8	28	6.3
515-90-2-400	101.6	400	985	9.66	2172	10	9	140	5.51	50			2.4	23	5.3
513-90-3-400	101.6	400	2125	20.8	4684	15	12	147	5.79	30	40	178	3.8	37	8.4
514-90-3-400	101.6	400	2125	20.8	4684	15	12	146	5.75	47	40	250	5.9	58	13.1
515-90-3-400	101.6	400	2125	20.8	4684	15	12	145	5.71	70			4.3	42	9.6
513-90-4-400	101.6	400	4293	42.1	9465	20	16	158	6.22	40	50	192	5.9	58	13.1
515-90-4-400	101.6	400	4293	42.1	9465	20	16	155	6.10	80			6.9	67	15.1
513-90-5-400	101.6	400	6324	62	13942	25	20	165	6.50	50	50	210	8.8	86	19.3
515-90-5-400	101.6	400	6324	62	13942	25	20	175	6.89	100			9.6	95	21.3
513-90-1-490	101.6	490	423	4.15	933	10	9	140	5.51	20	20	146	1.7	16	3.7
514-90-1-490	101.6	490	423	4.15	933	10	9	140	5.51	36	20	192	2.6	25	5.7
515-90-1-490	101.6	490	423	4.15	933	10	9	140	5.51	40			1.2	12	2.6
513-90-2-490	101.6	490	985	9.66	2172	10	9	140	5.51	20	30	153	2.0	19	4.3
514-90-2-490	101.6	490	985	9.66	2172	10	9	140	5.51	39	30	202	2.9	28	6.3
515-90-2-490	101.6	490	985	9.66	2172	10	9	140	5.51	50			2.4	23	5.3
513-90-3-490	101.6	490	2125	20.8	4684	15	12	147	5.79	30	40	178	3.8	37	8.4
514-90-3-490	101.6	490	2125	20.8	4684	15	12	146	5.75	47	40	250	5.9	58	13.1
515-90-3-490	101.6	490	2125	20.8	4684	15	12	145	5.71	70			4.2	41	9.2
513-90-4-490	101.6	490	4293	42.1	9465	20	16	158	6.22	40	50	192	5.9	58	13.1
515-90-4-490	101.6	490	4293	42.1	9465	20	16	155	6.10	80			6.6	64	14.4
513-90-5-490	101.6	490	6324	62	13942	25	20	165	6.50	50	50	210	8.7	85	19.2
515-90-5-490	101.6	490	6324	62	13942	25	20	165	6.50	100			9.0	88	19.8
513-90-1-530	101.6	530	423	4.15	933	10	9	140	5.51	20	30	153	1.9	19	4.2
514-90-1-530	101.6	530	423	4.15	933	10	9	140	5.51	36	30	194	2.9	29	6.5
515-90-1-530	101.6	530	423	4.15	933	10	9	140	5.51	50			2.4	23	5.3
513-90-2-530	101.6	530	985	9.66	2172	10	9	140	5.51	25	30	164	2.6	26	5.8
514-90-2-530	101.6	530	985	9.66	2172	10	9	140	5.51	39	30	208	3.4	34	7.5
515-90-2-530	101.6	530	985	9.66	2172	10	9	140	5.51	50			2.4	23	5.3
513-90-3-530	101.6	530	2125	20.8	4684	15	12	147	5.79	40	50	192	5.3	52	11.7
514-90-3-530	101.6	530	2125	20.8	4684	15	12	147	5.79	47	50	254	6.6	65	14.6
515-90-3-530	101.6	530	2125	20.8	4684	15	12	145	5.71	70			4.3	42	9.6
513-90-4-530	101.6	530	4293	42.1	9465	20	16	158	6.22	50	50	210	8.1	79	17.9
515-90-4-530	101.6	530	4293	42.1	9465	20	16	155	6.10	80			6.6	64	14.4
513-90-5-530	101.6	530	6324	62	13942	25	20	165	6.50	60	70	231	12.1	118	26.6
515-90-5-530	101.6	530	6324	62	13942	25	20	170	6.69	100			12.1	118	26.6
513-90-1-570	101.6	570	423	4.15	933	10	9	140	5.51	25	30	164	2.5	25	5.6
514-90-1-570	101.6	570	423	4.15	933	10	9	140	5.51	36	30	200	3.2	31	7.1
515-90-1-570	101.6	570	423	4.15	933	10	9	140	5.51	50			2.4	23	5.3
513-90-2-570	101.6	570	985	9.66	2172	10	9	140	5.51	30	40	178	3.6	35	7.9
514-90-2-570	101.6	570	985	9.66	2172	10	9	140	5.51	39	40	212	3.6	36	8.0
515-90-2-570	101.6	570	985	9.66	2172	10	9	140	5.51	70			4.0	39	8.8
513-90-3-570	101.6	570	2125	20.8	4684	15	12	147	5.79	50	50	210	7.4	73	16.4
514-90-3-570	101.6	570	2125	20.8	4684	15	12	159	6.26	51	50	262	10.1	99	22.2
515-90-3-570	101.6	570	2125	20.8	4684	15	12	145	5.71	80			6.2	60	13.6
513-90-4-570	101.6	570	4293	42.1	9465	20	16	158	6.22	60	70	231	11.4	112	25.2
515-90-4-570	101.6	570	4293	42.1	9465	20	16	160	6.30	100			11.1	109	24.6
513-90-5-570	101.6	570	6324	62	13942	25	20	165	6.50	70	80	256	16.8	165	37.0
515-90-5-570	101.6	570	6324	62	13942	25	20	170	6.69	100			12.1	118	26.6

CLAMPS FOR RIGID STRUTS AND SNUBBERS N.B. 4" / 100mm

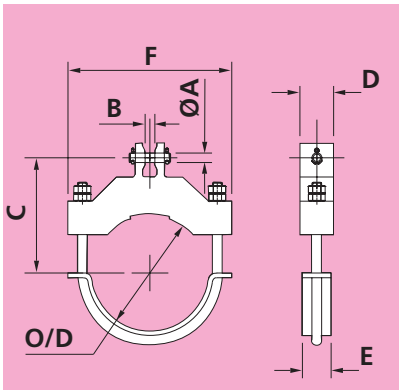

Type 513 Clamp

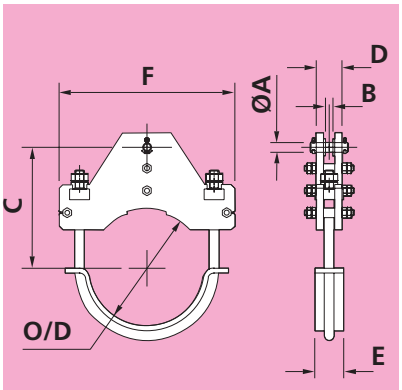

Type 514 Clamp

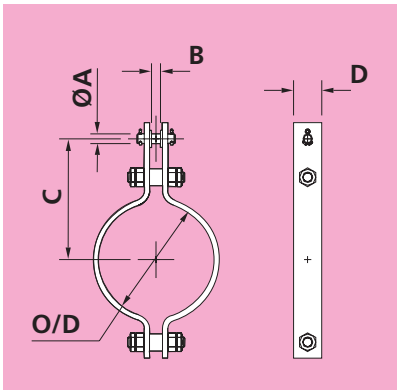

Type 515 Clamp

Fig. No.	Pipe O/D	Max. Pipe Temp	Max. Load			Dia. A	B	C		D	E	F	Clamp Weight		
	mm	°C	kgf	kN	lbs	mm	mm	mm	in	mm	mm	mm	kgf	N	lbs
513-100-1-400	114.3	400	423	4.15	933	10	9	147	5.79	20	20	160	1.9	18	4.2
514-100-1-400	114.3	400	423	4.15	933	10	9	146	5.75	36	20	206	2.7	27	6.0
515-100-1-400	114.3	400	423	4.15	933	10	9	145	5.71	50			2.6	25	5.6
513-100-2-400	114.3	400	985	9.66	2172	10	9	147	5.79	20	30	167	2.2	22	4.9
514-100-2-400	114.3	400	985	9.66	2172	10	9	146	5.75	39	30	216	3.1	31	6.9
515-100-2-400	114.3	400	985	9.66	2172	10	9	145	5.71	50			2.6	25	5.6
513-100-3-400	114.3	400	2125	20.8	4684	15	12	154	6.06	30	40	192	4.2	42	9.3
514-100-3-400	114.3	400	2125	20.8	4684	15	12	154	6.06	47	40	264	5.5	54	12.1
515-100-3-400	114.3	400	2125	20.8	4684	15	12	155	6.10	70			4.7	46	10.3
513-100-4-400	114.3	400	4293	42.1	9465	20	16	165	6.50	40	50	206	6.6	64	14.4
514-100-4-400	114.3	400	4293	42.1	9465	20	16	177	6.97	57	50	284	10.2	100	22.5
515-100-4-400	114.3	400	4293	42.1	9465	20	16	170	6.69	80			7.7	76	17.0
513-100-5-400	114.3	400	6324	62	13942	25	20	172	6.77	50	50	224	9.6	94	21.2
515-100-5-400	114.3	400	6324	62	13942	25	20	190	7.48	100			13.7	134	30.2
515-100-6-400	114.3	400	12754	125	28117	35	25	220	8.66	90			19.3	189	42.5
513-100-1-490	114.3	490	423	4.15	933	10	9	147	5.79	20	20	160	1.9	18	4.2
514-100-1-490	114.3	490	423	4.15	933	10	9	146	5.75	36	20	206	2.7	27	6.0
515-100-1-490	114.3	490	423	4.15	933	10	9	145	5.71	50			2.6	25	5.6
513-100-2-490	114.3	490	985	9.66	2172	10	9	147	5.79	20	30	167	2.2	22	4.9
514-100-2-490	114.3	490	985	9.66	2172	10	9	146	5.75	39	30	216	3.2	31	6.9
515-100-2-490	114.3	490	985	9.66	2172	10	9	145	5.71	50			2.6	25	5.6
513-100-3-490	114.3	490	2125	20.8	4684	15	12	154	6.06	30	40	192	4.2	42	9.3
514-100-3-490	114.3	490	2125	20.8	4684	15	12	154	6.06	47	40	264	5.5	54	12.1
515-100-3-490	114.3	490	2125	20.8	4684	15	12	155	6.10	70			4.7	46	10.3
513-100-4-490	114.3	490	4293	42.1	9465	20	16	165	6.50	40	50	206	6.6	64	14.4
514-100-4-490	114.3	490	4293	42.1	9465	20	16	175	6.89	57	50	284	10.2	100	22.5
515-100-4-490	114.3	490	4293	42.1	9465	20	16	165	6.50	80			7.4	72	16.2
513-100-5-490	114.3	490	6324	62	13942	25	20	172	6.77	50	50	224	9.5	93	21.0
515-100-5-490	114.3	490	6324	62	13942	25	20	170	6.69	100			9.4	92	20.6
515-100-6-490	114.3	490	12754	125	28117	35	25	215	8.46	90			18.1	177	39.8

CLAMPS FOR RIGID STRUTS AND SNUBBERS N.B. 4" / 100mm

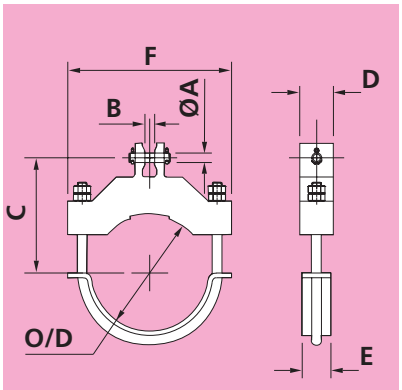

Type 513 Clamp

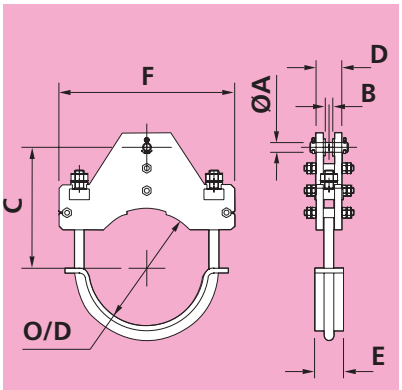

Type 514 Clamp

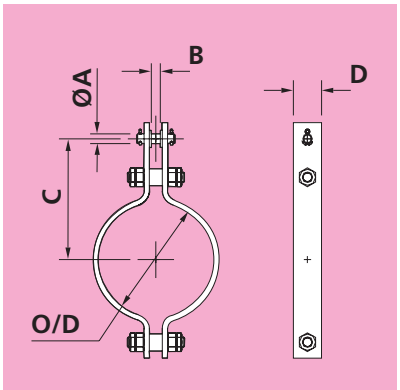

Type 515 Clamp

Fig. No.	Pipe O/D	Max. Pipe Temp	Max. Load			Dia. A	B	C		D	E	F	Clamp Weight		
	mm	°C	kgf	kN	lbs	mm	mm	mm	in	mm	mm	mm	kgf	N	lbs
513-100-1-530	114.3	530	423	4.15	933	10	9	147	5.79	20	30	167	2.1	21	4.7
514-100-1-530	114.3	530	423	4.15	933	10	9	146	5.75	36	30	208	2.8	28	6.2
515-100-1-530	114.3	530	423	4.15	933	10	9	145	5.71	50			2.6	25	5.6
513-100-2-530	114.3	530	985	9.66	2172	10	9	147	5.79	25	30	178	3.0	29	6.5
514-100-2-530	114.3	530	985	9.66	2172	10	9	146	5.75	39	30	222	3.0	29	6.5
515-100-2-530	114.3	530	985	9.66	2172	10	9	145	5.71	50			2.6	25	5.6
513-100-3-530	114.3	530	2125	20.8	4684	15	12	154	6.06	40	50	206	5.9	58	13.0
514-100-3-530	114.3	530	2125	20.8	4684	15	12	154	6.06	47	50	268	7.5	74	16.6
515-100-3-530	114.3	530	2125	20.8	4684	15	12	155	6.10	80			5.3	52	11.8
513-100-4-530	114.3	530	4293	42.1	9465	20	16	165	6.50	50	50	224	8.9	87	19.6
514-100-4-530	114.3	530	4293	42.1	9465	20	16	169	6.65	63	50	292	13.3	130	29.3
515-100-4-530	114.3	530	4293	42.1	9465	20	16	165	6.50	100			9.1	89	20.1
513-100-5-530	114.3	530	6324	62	13942	25	20	172	6.77	60	70	245	13.0	128	28.7
515-100-5-530	114.3	530	6324	62	13942	25	20	180	7.09	100			12.9	126	28.4
515-100-6-530	114.3	530	12754	125	28117	35	25	205	8.07	90			16.7	163	36.7
513-100-1-570	114.3	570	423	4.15	933	10	9	147	5.79	25	30	178	2.9	28	6.3
514-100-1-570	114.3	570	423	4.15	933	10	9	146	5.75	36	30	214	2.8	27	6.1
515-100-1-570	114.3	570	423	4.15	933	10	9	145	5.71	50			2.6	25	5.6
513-100-2-570	114.3	570	985	9.66	2172	10	9	147	5.79	30	40	192	4.0	39	8.9
514-100-2-570	114.3	570	985	9.66	2172	10	9	146	5.75	39	40	226	4.2	41	9.3
515-100-2-570	114.3	570	985	9.66	2172	10	9	145	5.71	70			4.2	41	9.3
513-100-3-570	114.3	570	2125	20.8	4684	15	12	154	6.06	50	50	224	8.2	80	18.1
514-100-3-570	114.3	570	2125	20.8	4684	15	12	167	6.57	51	50	276	10.8	106	23.7
515-100-3-570	114.3	570	2125	20.8	4684	15	12	155	6.10	80			6.7	65	14.7
513-100-4-570	114.3	570	4293	42.1	9465	20	16	165	6.50	60	70	245	12.4	122	27.3
514-100-4-570	114.3	570	4293	42.1	9465	20	16	193	7.60	63	70	298	18.0	177	39.8
515-100-4-570	114.3	570	4293	42.1	9465	20	16	170	6.69	100			12.3	120	27.0
513-100-5-570	114.3	570	6324	62	13942	25	20	172	6.77	70	80	270	18.1	178	39.9
515-100-5-570	114.3	570	6324	62	13942	25	20	180	7.09	110			14.1	138	31.1
515-100-6-570	114.3	570	12754	125	28117	35	25	215	8.46	100			22.7	223	50.1

CLAMPS FOR RIGID STRUTS AND SNUBBERS N.B. 5" / 125mm

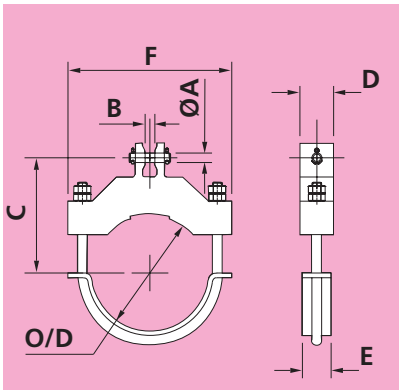

Type 513 Clamp

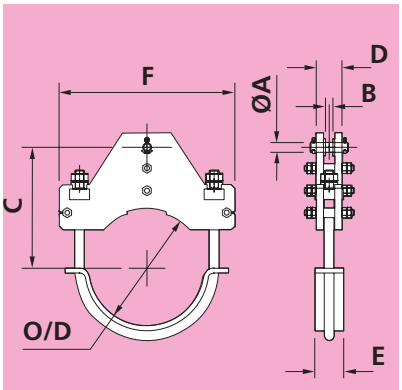

Type 514 Clamp

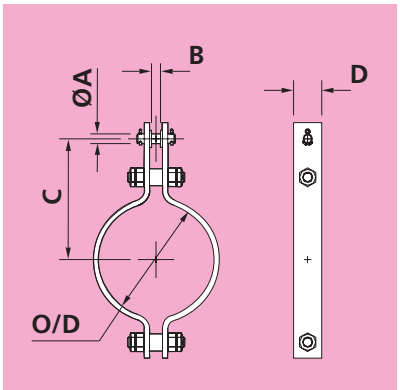

Type 515 Clamp

Fig. No.	Pipe O/D	Max. Pipe Temp	Max. Load			Dia. A	B	C		D	E	F	Clamp Weight		
	mm	°C	kgf	kN	lbs	mm	mm	mm	in	mm	mm	mm	kgf	N	lbs
513-125-1-400	141.3	400	423	4.15	933	10	9	160	6.30	20	20	186	2.3	23	5.1
514-125-1-400	141.3	400	423	4.15	933	10	9	159	6.26	36	20	232	2.7	27	6.0
515-125-1-400	141.3	400	423	4.15	933	10	9	160	6.30	50			2.9	28	6.3
513-125-2-400	141.3	400	985	9.66	2172	10	9	160	6.30	20	30	193	2.7	27	6.0
514-125-2-400	141.3	400	985	9.66	2172	10	9	159	6.26	39	30	242	3.1	30	6.8
515-125-2-400	141.3	400	985	9.66	2172	10	9	160	6.30	50			3.0	30	6.6
513-125-3-400	141.3	400	2125	20.8	4684	15	12	167	6.57	30	40	218	5.1	50	11.2
514-125-3-400	141.3	400	2125	20.8	4684	15	12	167	6.57	47	40	290	6.5	64	14.4
515-125-3-400	141.3	400	2125	20.8	4684	15	12	165	6.50	70			5.4	53	12.0
513-125-4-400	141.3	400	4293	42.1	9465	20	16	178	7.01	40	50	232	7.7	76	17.1
514-125-4-400	141.3	400	4293	42.1	9465	20	16	185	7.28	57	50	310	11.0	108	24.2
515-125-4-400	141.3	400	4293	42.1	9465	20	16	185	7.28	100			10.5	103	23.2
513-125-5-400	141.3	400	6324	62	13942	25	20	185	7.28	50	50	250	11.2	109	24.6
514-125-5-400	141.3	400	6324	62	13942	25	20	210	8.27	69	50	344	18.2	179	40.2
515-125-5-400	141.3	400	6324	62	13942	25	20	210	8.27	100			16.0	157	35.2
515-125-6-400	141.3	400	12754	125	28117	35	25	235	9.25	100			22.8	224	50.3
513-125-1-490	141.3	490	423	4.15	933	10	9	160	6.30	20	20	186	2.3	23	5.1
514-125-1-490	141.3	490	423	4.15	933	10	9	159	6.26	36	20	232	2.8	27	6.1
515-125-1-490	141.3	490	423	4.15	933	10	9	160	6.30	50			2.9	28	6.3
513-125-2-490	141.3	490	985	9.66	2172	10	9	160	6.30	20	30	193	2.7	27	6.0
514-125-2-490	141.3	490	985	9.66	2172	10	9	159	6.26	39	30	242	3.1	31	6.9
515-125-2-490	141.3	490	985	9.66	2172	10	9	160	6.30	50			2.9	28	6.3
513-125-3-490	141.3	490	2125	20.8	4684	15	12	167	6.57	30	40	218	5.1	50	11.2
514-125-3-490	141.3	490	2125	20.8	4684	15	12	167	6.57	47	40	290	6.6	65	14.6
515-125-3-490	141.3	490	2125	20.8	4684	15	12	165	6.50	70			5.2	51	11.4
513-125-4-490	141.3	490	4293	42.1	9465	20	16	178	7.01	40	50	232	7.7	76	17.1
514-125-4-490	141.3	490	4293	42.1	9465	20	16	184	7.24	57	50	310	10.9	107	24.1
515-125-4-490	141.3	490	4293	42.1	9465	20	16	180	7.09	100			10.1	99	22.3
513-125-5-490	141.3	490	6324	62	13942	25	20	185	7.28	50	50	250	11.2	109	24.6
514-125-5-490	141.3	490	6324	62	13942	25	20	208	8.19	69	50	344	18.2	178	40.0
515-125-5-490	141.3	490	6324	62	13942	25	20	195	7.68	100			14.2	139	31.3
515-125-6-490	141.3	490	12754	125	28117	35	25	230	9.06	100			21.5	211	47.4

CLAMPS FOR RIGID STRUTS AND SNUBBERS N.B. 5" / 125mm

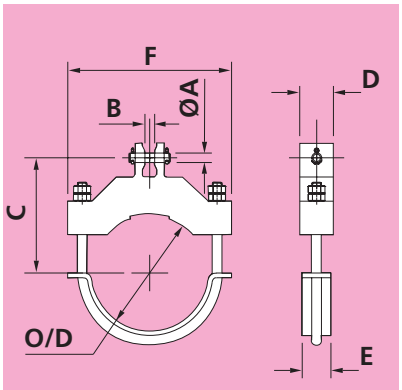

Type 513 Clamp

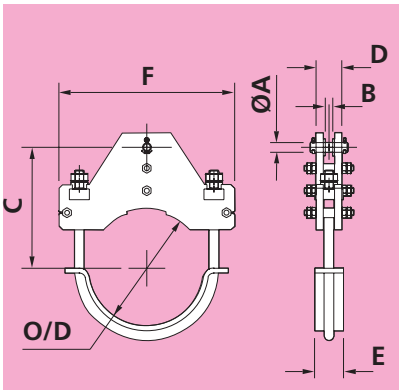

Type 514 Clamp

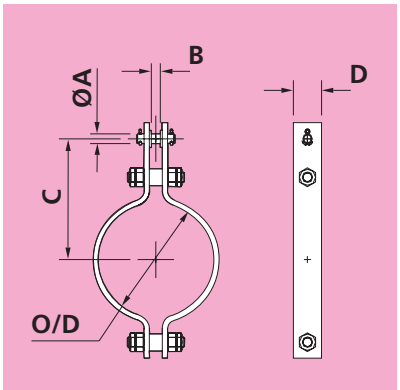

Type 515 Clamp

Fig. No.	Pipe O/D	Max. Pipe Temp	Max. Load			Dia. A	B	C		D	E	F	Clamp Weight		
	mm	°C	kgf	kN	lbs	mm	mm	mm	in	mm	mm	mm	kgf	N	lbs
513-125-1-530	141.3	530	423	4.15	933	10	9	160	6.30	20	30	193	2.6	26	5.8
514-125-1-530	141.3	530	423	4.15	933	10	9	159	6.26	36	30	234	3.3	32	7.2
515-125-1-530	141.3	530	423	4.15	933	10	9	160	6.30	50			2.9	28	6.3
513-125-2-530	141.3	530	985	9.66	2172	10	9	160	6.30	25	30	204	3.6	36	8.0
514-125-2-530	141.3	530	985	9.66	2172	10	9	159	6.26	39	30	248	4.1	40	9.1
515-125-2-530	141.3	530	985	9.66	2172	10	9	160	6.30	60			3.4	33	7.5
513-125-3-530	141.3	530	2125	20.8	4684	15	12	167	6.57	40	50	232	7.0	69	15.5
514-125-3-530	141.3	530	2125	20.8	4684	15	12	167	6.57	47	50	294	7.2	71	15.9
515-125-3-530	141.3	530	2125	20.8	4684	15	12	165	6.50	80			7.4	72	16.3
513-125-4-530	141.3	530	4293	42.1	9465	20	16	178	7.01	50	50	250	10.4	102	23.0
514-125-4-530	141.3	530	4293	42.1	9465	20	16	194	7.64	57	50	318	14.1	138	31.1
515-125-4-530	141.3	530	4293	42.1	9465	20	16	185	7.28	100			13.6	133	30.0
513-125-5-530	141.3	530	6324	62	13942	25	20	185	7.28	60	70	271	15.1	148	33.4
514-125-5-530	141.3	530	6324	62	13942	25	20	218	8.58	69	70	350	24.0	236	53.0
515-125-5-530	141.3	530	6324	62	13942	25	20	195	7.68	100			14.2	139	31.3
515-125-6-530	141.3	530	12754	125	28117	35	25	230	9.06	120			25.5	250	56.2
513-125-1-570	141.3	570	423	4.15	933	10	9	160	6.30	25	30	204	3.5	35	7.8
514-125-1-570	141.3	570	423	4.15	933	10	9	159	6.26	36	30	240	4.1	40	9.1
515-125-1-570	141.3	570	423	4.15	933	10	9	160	6.30	50			2.9	28	6.3
513-125-2-570	141.3	570	985	9.66	2172	10	9	160	6.30	30	40	218	4.9	48	10.8
514-125-2-570	141.3	570	985	9.66	2172	10	9	159	6.26	39	40	252	4.6	45	10.2
515-125-2-570	141.3	570	985	9.66	2172	10	9	160	6.30	70			4.8	47	10.6
513-125-3-570	141.3	570	2125	20.8	4684	15	12	167	6.57	50	50	250	9.7	95	21.4
514-125-3-570	141.3	570	2125	20.8	4684	15	12	180	7.09	51	50	302	11.2	110	24.6
515-125-3-570	141.3	570	2125	20.8	4684	15	12	165	6.50	80			7.4	72	16.3
513-125-4-570	141.3	570	4293	42.1	9465	20	16	178	7.01	60	70	271	14.4	142	31.9
514-125-4-570	141.3	570	4293	42.1	9465	20	16	206	8.11	63	70	324	20.3	199	44.6
515-125-4-570	141.3	570	4293	42.1	9465	20	16	185	7.28	100			13.6	133	30.0
513-125-5-570	141.3	570	6324	62	13942	25	20	185	7.28	70	80	296	20.6	202	45.4
514-125-5-570	141.3	570	6324	62	13942	25	20	233	9.17	79	80	360	34.1	334	75.2
515-125-5-570	141.3	570	6324	62	13942	25	20	200	7.87	90			16.2	159	35.7
515-125-6-570	141.3	570	12754	125	28117	35	25	235	9.25	110			28.3	278	62.4

CLAMPS FOR RIGID STRUTS AND SNUBBERS N.B. 6" / 150mm

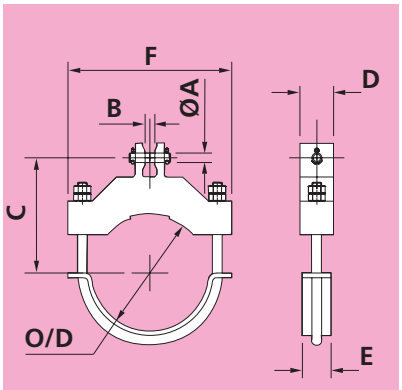

Type 513 Clamp

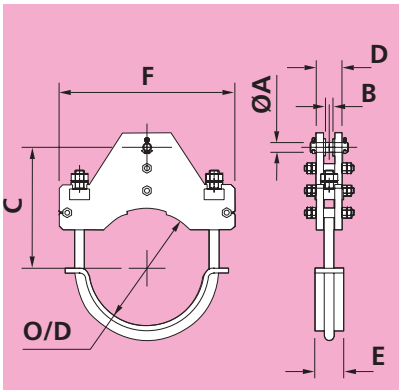

Type 514 Clamp

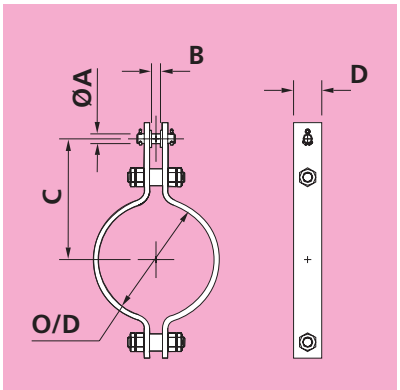

Type 515 Clamp

Fig. No.	Pipe O/D	Max. Pipe Temp	Max. Load			Dia. A	B	C		D	E	F	Clamp Weight		
	mm	°C	kgf	kN	lbs	mm	mm	mm	in	mm	mm	mm	kgf	N	lbs
513-150-1-400	168.3	400	423	4.15	933	10	9	184	7.24	20	20	214	3.0	29	6.6
514-150-1-400	168.3	400	423	4.15	933	10	9	184	7.24	36	20	260	4.0	40	8.9
515-150-1-400	168.3	400	423	4.15	933	10	9	185	7.28	50			3.3	32	7.3
513-150-2-400	168.3	400	985	9.66	2172	10	9	184	7.24	20	30	221	3.5	35	7.8
514-150-2-400	168.3	400	985	9.66	2172	10	9	184	7.24	39	30	270	4.5	44	9.8
515-150-2-400	168.3	400	985	9.66	2172	10	9	185	7.28	50			3.4	34	7.6
513-150-3-400	168.3	400	2125	20.8	4684	15	12	191	7.52	30	40	246	6.4	62	14.0
514-150-3-400	168.3	400	2125	20.8	4684	15	12	190	7.48	47	40	318	6.2	61	13.6
515-150-3-400	168.3	400	2125	20.8	4684	15	12	190	7.48	80			7.0	69	15.4
513-150-4-400	168.3	400	4293	42.1	9465	20	16	202	7.95	40	50	260	9.5	94	21.0
514-150-4-400	168.3	400	4293	42.1	9465	20	16	200	7.87	57	50	338	10.7	105	23.5
515-150-4-400	168.3	400	4293	42.1	9465	20	16	210	8.27	100			15.8	154	34.7
513-150-5-400	168.3	400	6324	62	13942	25	20	209	8.23	50	50	278	13.5	133	29.8
514-150-5-400	168.3	400	6324	62	13942	25	20	218	8.58	69	50	372	18.6	183	41.0
515-150-5-400	168.3	400	6324	62	13942	25	20	225	8.86	100			17.3	170	38.2
514-150-6-400	168.3	400	12754	125	28117	35	25	279	10.98	86	80	414	43.6	428	96.2
515-150-6-400	168.3	400	12754	125	28117	35	25	250	9.84	120			28.9	284	63.8
515-150-7-400	168.3	400	18132	178	39974	40	28	280	11.02	120			38.7	379	85.3
513-150-1-490	168.3	490	423	4.15	933	10	9	184	7.24	20	20	214	3.0	29	6.6
514-150-1-490	168.3	490	423	4.15	933	10	9	184	7.24	36	20	260	4.1	40	9.0
515-150-1-490	168.3	490	423	4.15	933	10	9	185	7.28	50			3.3	32	7.3
513-150-2-490	168.3	490	985	9.66	2172	10	9	184	7.24	20	30	221	3.5	35	7.8
514-150-2-490	168.3	490	985	9.66	2172	10	9	184	7.24	39	30	270	4.5	44	9.9
515-150-2-490	168.3	490	985	9.66	2172	10	9	185	7.28	50			3.3	32	7.3
513-150-3-490	168.3	490	2125	20.8	4684	15	12	191	7.52	30	40	246	6.4	62	14.0
514-150-3-490	168.3	490	2125	20.8	4684	15	12	190	7.48	47	40	318	6.2	61	13.6
515-150-3-490	168.3	490	2125	20.8	4684	15	12	190	7.48	80			6.7	66	14.9
513-150-4-490	168.3	490	4293	42.1	9465	20	16	202	7.95	40	50	260	9.5	93	20.9
514-150-4-490	168.3	490	4293	42.1	9465	20	16	200	7.87	57	50	338	10.7	105	23.6
515-150-4-490	168.3	490	4293	42.1	9465	20	16	200	7.87	100			14.9	146	32.9
513-150-5-490	168.3	490	6324	62	13942	25	20	209	8.23	50	50	278	13.5	132	29.7
514-150-5-490	168.3	490	6324	62	13942	25	20	217	8.54	69	50	372	18.6	182	41.0
515-150-5-490	168.3	490	6324	62	13942	25	20	220	8.66	100			16.4	161	36.1
514-150-6-490	168.3	490	12754	125	28117	35	25	277	10.91	86	70	404	39.9	392	88.0
515-150-6-490	168.3	490	12754	125	28117	35	25	245	9.65	110			25.3	248	55.8
515-150-7-490	168.3	490	18132	178	39974	40	28	265	10.43	110			33.2	326	73.2

CLAMPS FOR RIGID STRUTS AND SNUBBERS N.B. 6" / 150mm

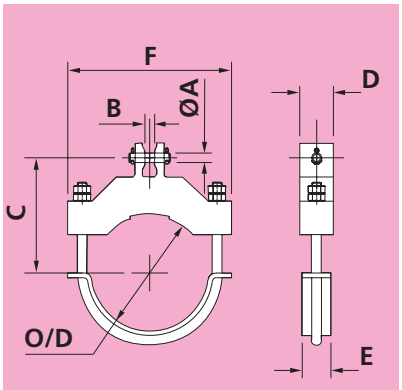

Type 513 Clamp

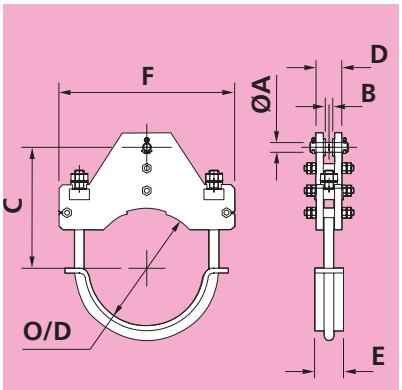

Type 514 Clamp

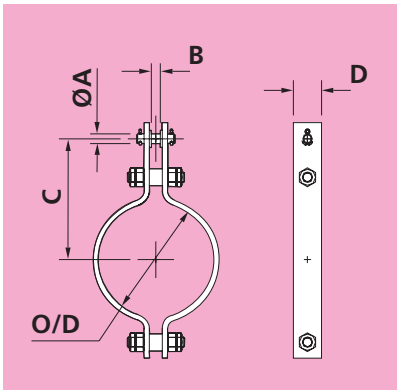

Type 515 Clamp

Fig. No.	Pipe O/D	Max. Pipe Temp	Max. Load			Dia. A	B	C		D	E	F	Clamp Weight		
	mm	°C	kgf	kN	lbs	mm	mm	mm	in	mm	mm	mm	kgf	N	lbs
513-150-1-530	168.3	530	423	4.15	933	10	9	184	7.24	20	30	221	3.3	33	7.4
514-150-1-530	168.3	530	423	4.15	933	10	9	184	7.24	36	30	262	4.5	44	10.0
515-150-1-530	168.3	530	423	4.15	933	10	9	185	7.28	50			3.3	32	7.3
513-150-2-530	168.3	530	985	9.66	2172	10	9	184	7.24	25	30	232	4.7	46	10.3
514-150-2-530	168.3	530	985	9.66	2172	10	9	184	7.24	39	30	276	5.1	50	11.3
515-150-2-530	168.3	530	985	9.66	2172	10	9	185	7.28	60			3.9	39	8.7
513-150-3-530	168.3	530	2125	20.8	4684	15	12	191	7.52	40	50	260	8.7	86	19.3
514-150-3-530	168.3	530	2125	20.8	4684	15	12	191	7.52	51	50	322	8.1	79	17.9
515-150-3-530	168.3	530	2125	20.8	4684	15	12	190	7.48	80			8.4	82	18.5
513-150-4-530	168.3	530	4293	42.1	9465	20	16	202	7.95	50	50	278	12.7	124	27.9
514-150-4-530	168.3	530	4293	42.1	9465	20	16	203	7.99	57	50	346	13.7	134	30.2
515-150-4-530	168.3	530	4293	42.1	9465	20	16	200	7.87	100			14.9	146	32.9
513-150-5-530	168.3	530	6324	62	13942	25	20	209	8.23	60	70	299	18.0	177	39.7
514-150-5-530	168.3	530	6324	62	13942	25	20	227	8.94	69	70	378	25.4	249	55.9
515-150-5-530	168.3	530	6324	62	13942	25	20	220	8.66	110			17.9	176	39.6
514-150-6-530	168.3	530	12754	125	28117	35	25	288	11.34	86	80	414	45.2	443	99.7
515-150-6-530	168.3	530	12754	125	28117	35	25	255	10.04	100			28.3	278	62.5
515-150-7-530	168.3	530	18132	178	39974	40	28	260	10.24	120			34.3	337	75.7
513-150-1-570	168.3	570	423	4.15	933	10	9	184	7.24	25	30	232	4.4	43	9.8
514-150-1-570	168.3	570	423	4.15	933	10	9	184	7.24	36	30	268	4.9	48	10.9
515-150-1-570	168.3	570	423	4.15	933	10	9	185	7.28	50			3.3	32	7.3
513-150-2-570	168.3	570	985	9.66	2172	10	9	184	7.24	30	40	246	6.1	60	13.5
514-150-2-570	168.3	570	985	9.66	2172	10	9	184	7.24	39	40	280	5.0	49	10.9
515-150-2-570	168.3	570	985	9.66	2172	10	9	185	7.28	70			5.5	54	12.2
513-150-3-570	168.3	570	2125	20.8	4684	15	12	191	7.52	50	50	278	11.9	117	26.2
514-150-3-570	168.3	570	2125	20.8	4684	15	12	194	7.64	51	50	330	13.2	130	29.1
515-150-3-570	168.3	570	2125	20.8	4684	15	12	190	7.48	100			10.5	103	23.1
513-150-4-570	168.3	570	4293	42.1	9465	20	16	202	7.95	60	70	299	17.2	168	37.8
514-150-4-570	168.3	570	4293	42.1	9465	20	16	220	8.66	63	70	352	21.3	209	47.0
515-150-4-570	168.3	570	4293	42.1	9465	20	16	200	7.87	100			14.9	146	32.9
513-150-5-570	168.3	570	6324	62	13942	25	20	209	8.23	70	80	324	24.1	237	53.2
514-150-5-570	168.3	570	6324	62	13942	25	20	247	9.72	79	80	388	34.8	341	76.7
515-150-5-570	168.3	570	6324	62	13942	25	20	220	8.66	90			18.0	177	39.7
514-150-6-570	168.3	570	12754	125	28117	35	25	288	11.34	96	90	420	59.4	582	130.8
515-150-6-570	168.3	570	12754	125	28117	35	25	255	10.04	130			36.4	357	80.2
515-150-7-570	168.3	570	18132	178	39974	40	28	275	10.83	120			47.2	463	104.0

CLAMPS FOR RIGID STRUTS AND SNUBBERS N.B. 7" / 175mm

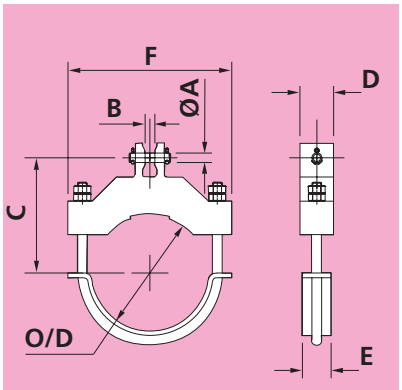

Type 513 Clamp

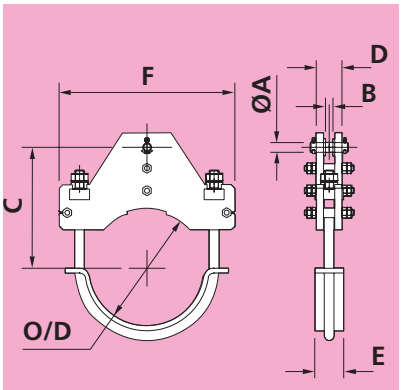

Type 514 Clamp

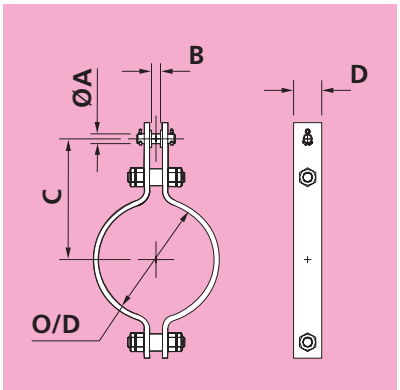

Type 515 Clamp

Fig. No.	Pipe O/D	Max. Pipe Temp	Max. Load			Dia. A	B	C		D	E	F	Clamp Weight		
	mm	°C	kgf	kN	lbs	mm	mm	mm	in	mm	mm	mm	kgf	N	lbs
513-175-1-400	193.7	400	423	4.15	933	10	9	197	7.76	20	20	240	3.5	35	7.8
514-175-1-400	193.7	400	423	4.15	933	10	9	197	7.76	36	20	286	4.1	40	9.0
515-175-1-400	193.7	400	423	4.15	933	10	9	195	7.68	50			3.6	35	7.9
513-175-2-400	193.7	400	985	9.66	2172	10	9	197	7.76	20	30	247	4.3	42	9.4
514-175-2-400	193.7	400	985	9.66	2172	10	9	197	7.76	39	30	296	4.6	45	10.0
515-175-2-400	193.7	400	985	9.66	2172	10	9	195	7.68	60			4.5	44	9.9
513-175-3-400	193.7	400	2125	20.8	4684	15	12	204	8.03	30	40	272	7.6	75	16.8
514-175-3-400	193.7	400	2125	20.8	4684	15	12	203	7.99	47	40	344	8.2	81	18.2
515-175-3-400	193.7	400	2125	20.8	4684	15	12	200	7.87	80			9.4	93	20.8
513-175-4-400	193.7	400	4293	42.1	9465	20	16	215	8.46	40	50	286	11.2	110	24.6
514-175-4-400	193.7	400	4293	42.1	9465	20	16	213	8.39	57	50	364	12.1	119	26.7
515-175-4-400	193.7	400	4293	42.1	9465	20	16	230	9.06	100			18.0	177	39.8
513-175-5-400	193.7	400	6324	62	13942	25	20	222	8.74	50	50	304	15.5	152	34.3
514-175-5-400	193.7	400	6324	62	13942	25	20	226	8.90	69	50	398	19.9	195	43.8
515-175-5-400	193.7	400	6324	62	13942	25	20	240	9.45	100			18.7	183	41.2
514-175-6-400	193.7	400	12754	125	28117	35	25	287	11.30	86	80	440	49.1	482	108.3
515-175-6-400	193.7	400	12754	125	28117	35	25	275	10.83	100			31.7	311	70.0
514-175-7-400	193.7	400	18132	178	39974	40	28	316	12.44	102	90	462	68.7	674	151.5
515-175-7-400	193.7	400	18132	178	39974	40	28	295	11.61	130			44.2	433	97.4
515-175-8-400	193.7	400	25524	250	56269	50	35	325	12.80	130			64.9	637	143.1
513-175-1-490	193.7	490	423	4.15	933	10	9	197	7.76	20	20	240	3.5	35	7.8
514-175-1-490	193.7	490	423	4.15	933	10	9	197	7.76	36	20	286	4.1	40	9.0
515-175-1-490	193.7	490	423	4.15	933	10	9	195	7.68	50			3.6	35	7.9
513-175-2-490	193.7	490	985	9.66	2172	10	9	197	7.76	20	30	247	4.3	42	9.4
514-175-2-490	193.7	490	985	9.66	2172	10	9	197	7.76	39	30	296	4.6	45	10.1
515-175-2-490	193.7	490	985	9.66	2172	10	9	195	7.68	60			4.3	42	9.5
513-175-3-490	193.7	490	2125	20.8	4684	15	12	204	8.03	30	40	272	7.6	74	16.7
514-175-3-490	193.7	490	2125	20.8	4684	15	12	203	7.99	47	40	344	8.1	79	17.8
515-175-3-490	193.7	490	2125	20.8	4684	15	12	200	7.87	80			9.1	90	20.1
513-175-4-490	193.7	490	4293	42.1	9465	20	16	215	8.46	40	50	286	11.2	110	24.6
514-175-4-490	193.7	490	4293	42.1	9465	20	16	213	8.39	57	50	364	12.5	123	27.6
515-175-4-490	193.7	490	4293	42.1	9465	20	16	215	8.46	100			16.3	160	35.9
513-175-5-490	193.7	490	6324	62	13942	25	20	222	8.74	50	50	304	15.5	152	34.3
514-175-5-490	193.7	490	6324	62	13942	25	20	226	8.90	69	50	398	20.1	197	44.3
515-175-5-490	193.7	490	6324	62	13942	25	20	235	9.25	100			17.7	174	39.1
514-175-6-490	193.7	490	12754	125	28117	35	25	287	11.30	86	70	430	40.0	392	88.1
515-175-6-490	193.7	490	12754	125	28117	35	25	260	10.24	120			29.5	289	65.0
514-175-7-490	193.7	490	18132	178	39974	40	28	313	12.32	102	80	456	56.8	557	125.1
515-175-7-490	193.7	490	18132	178	39974	40	28	285	11.22	130			42.0	412	92.5
515-175-8-490	193.7	490	25524	250	56269	50	35	305	12.01	130			59.2	580	130.5

CLAMPS FOR RIGID STRUTS AND SNUBBERS N.B. 7" / 175mm

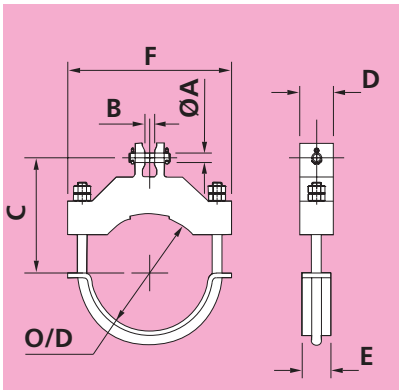

Type 513 Clamp

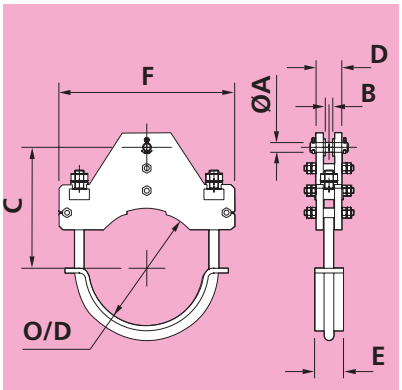

Type 514 Clamp

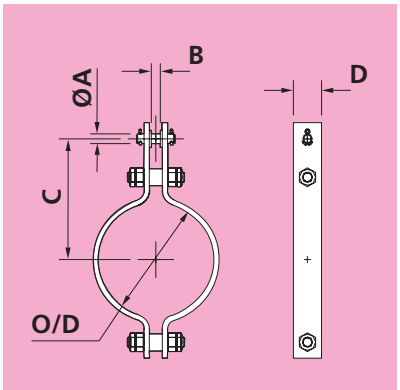

Type 515 Clamp

Fig. No.	Pipe O/D	Max. Pipe Temp	Max. Load			Dia. A	B	C		D	E	F	Clamp Weight		
	mm	°C	kgf	kN	lbs	mm	mm	mm	in	mm	mm	mm	kgf	N	lbs
513-175-1-530	193.7	530	423	4.15	933	10	9	197	7.76	20	30	247	3.9	38	8.6
514-175-1-530	193.7	530	423	4.15	933	10	9	197	7.76	36	30	288	4.1	41	9.1
515-175-1-530	193.7	530	423	4.15	933	10	9	195	7.68	50			3.6	35	7.9
513-175-2-530	193.7	530	985	9.66	2172	10	9	197	7.76	25	30	258	5.6	55	12.4
514-175-2-530	193.7	530	985	9.66	2172	10	9	197	7.76	39	30	302	4.1	40	9.0
515-175-2-530	193.7	530	985	9.66	2172	10	9	195	7.68	70			6.0	59	13.3
513-175-3-530	193.7	530	2125	20.8	4684	15	12	204	8.03	40	50	286	10.3	101	22.7
514-175-3-530	193.7	530	2125	20.8	4684	15	12	204	8.03	51	50	348	10.7	105	23.5
515-175-3-530	193.7	530	2125	20.8	4684	15	12	200	7.87	80			9.1	90	20.1
513-175-4-530	193.7	530	4293	42.1	9465	20	16	215	8.46	50	50	304	14.7	144	32.5
514-175-4-530	193.7	530	4293	42.1	9465	20	16	213	8.39	57	50	372	14.3	140	31.4
515-175-4-530	193.7	530	4293	42.1	9465	20	16	215	8.46	100			16.3	160	35.9
513-175-5-530	193.7	530	6324	62	13942	25	20	222	8.74	60	70	325	20.5	201	45.1
514-175-5-530	193.7	530	6324	62	13942	25	20	236	9.29	69	70	404	24.1	236	53.1
515-175-5-530	193.7	530	6324	62	13942	25	20	245	9.65	90			20.5	201	45.1
514-175-6-530	193.7	530	12754	125	28117	35	25	297	11.69	86	80	440	50.9	499	112.1
515-175-6-530	193.7	530	12754	125	28117	35	25	270	10.63	100			30.3	297	66.8
514-175-7-530	193.7	530	18132	178	39974	40	28	324	12.76	102	90	462	70.7	694	155.9
515-175-7-530	193.7	530	18132	178	39974	40	28	285	11.22	150			48.0	471	105.9
515-175-8-530	193.7	530	25524	250	56269	50	35	305	12.01	130			59.2	580	130.5
513-175-1-570	193.7	570	423	4.15	933	10	9	197	7.76	25	30	258	5.2	51	11.5
514-175-1-570	193.7	570	423	4.15	933	10	9	197	7.76	36	30	294	3.7	37	8.2
515-175-1-570	193.7	570	423	4.15	933	10	9	195	7.68	50			3.6	35	7.9
513-175-2-570	193.7	570	985	9.66	2172	10	9	197	7.76	30	40	272	7.3	72	16.2
514-175-2-570	193.7	570	985	9.66	2172	10	9	197	7.76	39	40	306	5.6	55	12.3
515-175-2-570	193.7	570	985	9.66	2172	10	9	195	7.68	80			6.9	67	15.2
513-175-3-570	193.7	570	2125	20.8	4684	15	12	204	8.03	50	50	304	13.9	136	30.6
514-175-3-570	193.7	570	2125	20.8	4684	15	12	207	8.15	51	50	356	14.4	141	31.7
515-175-3-570	193.7	570	2125	20.8	4684	15	12	205	8.07	100			15.4	151	34.0
513-175-4-570	193.7	570	4293	42.1	9465	20	16	215	8.46	60	70	325	19.8	194	43.6
514-175-4-570	193.7	570	4293	42.1	9465	20	16	233	9.17	63	70	378	23.9	234	52.7
515-175-4-570	193.7	570	4293	42.1	9465	20	16	215	8.46	110			17.9	175	39.4
513-175-5-570	193.7	570	6324	62	13942	25	20	222	8.74	70	80	350	27.3	268	60.2
514-175-5-570	193.7	570	6324	62	13942	25	20	260	10.24	79	80	414	38.3	375	84.4
515-175-5-570	193.7	570	6324	62	13942	25	20	245	9.65	110			24.8	244	54.8
514-175-6-570	193.7	570	12754	125	28117	35	25	301	11.85	96	90	446	66.7	654	147.1
515-175-6-570	193.7	570	12754	125	28117	35	25	270	10.63	140			41.8	410	92.2
514-175-7-570	193.7	570	18132	178	39974	40	28	346	13.62	102	100	474	86.3	847	190.3
515-175-7-570	193.7	570	18132	178	39974	40	28	295	11.61	120			52.3	513	115.2
515-175-8-570	193.7	570	25524	250	56269	50	35	305	12.01	150			67.7	664	149.3

CLAMPS FOR RIGID STRUTS AND SNUBBERS N.B. 8" / 200mm

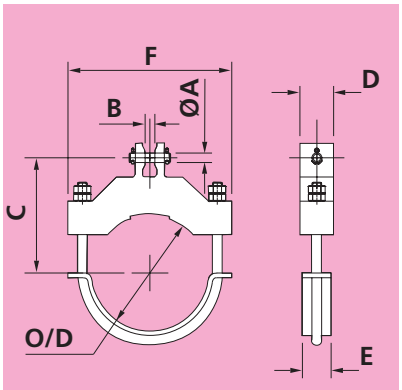

Type 513 Clamp

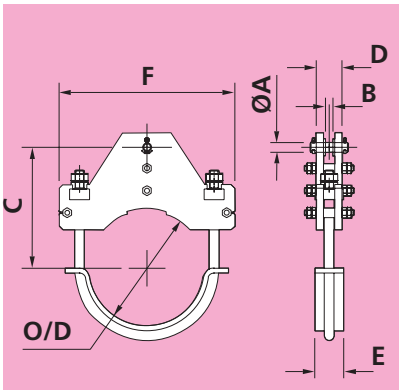

Type 514 Clamp

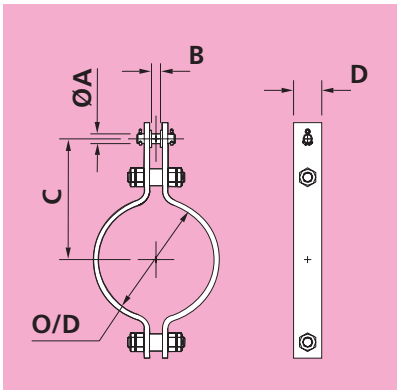

Type 515 Clamp

Fig. No.	Pipe O/D	Max. Pipe Temp	Max. Load			Dia. A	B	C		D	E	F	Clamp Weight		
	mm	°C	kgf	kN	lbs	mm	mm	mm	in	mm	mm	mm	kgf	N	lbs
513-200-1-400	219.1	400	423	4.15	933	10	9	210	8.27	20	20	266	4.2	41	9.2
514-200-1-400	219.1	400	423	4.15	933	10	9	208	8.19	36	20	312	4.3	42	9.4
515-200-1-400	219.1	400	423	4.15	933	10	9	210	8.27	50			3.9	39	8.7
513-200-2-400	219.1	400	985	9.66	2172	10	9	210	8.27	20	30	273	5.1	50	11.2
514-200-2-400	219.1	400	985	9.66	2172	10	9	208	8.19	39	30	322	5.0	49	11.0
515-200-2-400	219.1	400	985	9.66	2172	10	9	210	8.27	70			6.8	66	14.9
513-200-3-400	219.1	400	2125	20.8	4684	15	12	217	8.54	30	40	298	9.0	88	19.8
514-200-3-400	219.1	400	2125	20.8	4684	15	12	217	8.54	47	40	370	9.2	90	20.2
515-200-3-400	219.1	400	2125	20.8	4684	15	12	215	8.46	80			10.2	100	22.4
513-200-4-400	219.1	400	4293	42.1	9465	20	16	228	8.98	40	50	312	13.0	128	28.7
514-200-4-400	219.1	400	4293	42.1	9465	20	16	226	8.90	57	50	390	12.2	120	27.0
515-200-4-400	219.1	400	4293	42.1	9465	20	16	240	9.45	100			18.5	181	40.7
513-200-5-400	219.1	400	6324	62	13942	25	20	235	9.25	50	50	330	17.9	175	39.4
514-200-5-400	219.1	400	6324	62	13942	25	20	235	9.25	69	50	424	19.5	191	42.9
515-200-5-400	219.1	400	6324	62	13942	25	20	255	10.04	110			21.9	215	48.3
514-200-6-400	219.1	400	12754	125	28117	35	25	297	11.69	86	80	466	46.7	458	103.0
515-200-6-400	219.1	400	12754	125	28117	35	25	300	11.81	110			38.9	381	85.7
514-200-7-400	219.1	400	18132	178	39974	40	28	324	12.76	102	90	488	69.8	684	153.8
515-200-7-400	219.1	400	18132	178	39974	40	28	310	12.20	150			53.4	524	117.7
515-200-8-400	219.1	400	25524	250	56269	50	35	340	13.39	130			68.3	670	150.5
513-200-1-490	219.1	490	423	4.15	933	10	9	210	8.27	20	20	266	4.2	41	9.2
514-200-1-490	219.1	490	423	4.15	933	10	9	208	8.19	36	20	312	4.3	42	9.4
515-200-1-490	219.1	490	423	4.15	933	10	9	210	8.27	50			3.9	39	8.7
513-200-2-490	219.1	490	985	9.66	2172	10	9	210	8.27	20	30	273	5.1	50	11.2
514-200-2-490	219.1	490	985	9.66	2172	10	9	208	8.19	39	30	322	5.0	49	11.0
515-200-2-490	219.1	490	985	9.66	2172	10	9	210	8.27	60			4.7	46	10.4
513-200-3-490	219.1	490	2125	20.8	4684	15	12	217	8.54	30	40	298	8.9	87	19.7
514-200-3-490	219.1	490	2125	20.8	4684	15	12	217	8.54	47	40	370	9.3	91	20.4
515-200-3-490	219.1	490	2125	20.8	4684	15	12	215	8.46	80			10.0	98	22.0
513-200-4-490	219.1	490	4293	42.1	9465	20	16	228	8.98	40	50	312	13.0	128	28.7
514-200-4-490	219.1	490	4293	42.1	9465	20	16	226	8.90	57	50	390	12.4	122	27.4
515-200-4-490	219.1	490	4293	42.1	9465	20	16	230	9.06	100			17.6	173	38.9
513-200-5-490	219.1	490	6324	62	13942	25	20	235	9.25	50	50	330	17.9	175	39.4
514-200-5-490	219.1	490	6324	62	13942	25	20	233	9.17	69	50	424	19.3	190	42.6
515-200-5-490	219.1	490	6324	62	13942	25	20	250	9.84	110			20.9	205	46.1
514-200-6-490	219.1	490	12754	125	28117	35	25	295	11.61	86	70	456	40.9	401	90.2
515-200-6-490	219.1	490	12754	125	28117	35	25	285	11.22	100			32.3	317	71.2
514-200-7-490	219.1	490	18132	178	39974	40	28	322	12.68	102	80	482	64.0	628	141.2
515-200-7-490	219.1	490	18132	178	39974	40	28	300	11.81	140			47.7	468	105.2
515-200-8-490	219.1	490	25524	250	56269	50	35	335	13.19	130			65.7	644	144.9

CLAMPS FOR RIGID STRUTS AND SNUBBERS N.B. 8" / 200mm

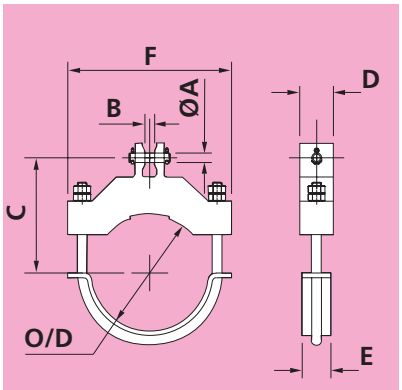

Type 513 Clamp

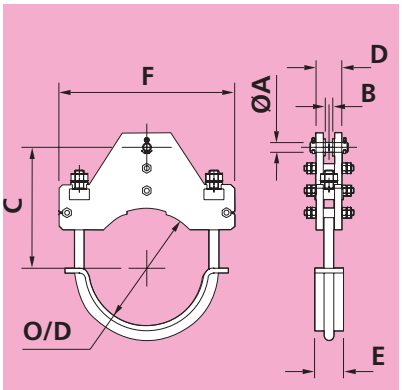

Type 514 Clamp

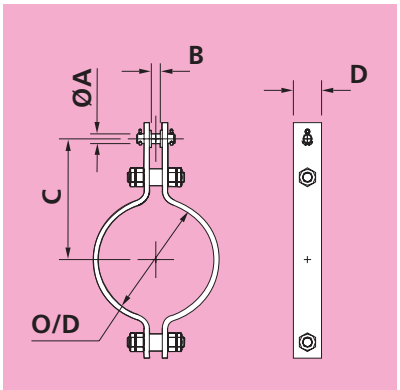

Type 515 Clamp

Fig. No.	Pipe O/D	Max. Pipe Temp	Max. Load			Dia. A	B	C		D	E	F	Clamp Weight		
	mm	°C	kgf	kN	lbs	mm	mm	mm	in	mm	mm	mm	kgf	N	lbs
513-200-1-530	219.1	530	423	4.15	933	10	9	210	8.27	20	30	273	4.7	46	10.3
514-200-1-530	219.1	530	423	4.15	933	10	9	208	8.19	36	30	314	4.7	46	10.3
515-200-1-530	219.1	530	423	4.15	933	10	9	210	8.27	50			3.9	39	8.7
513-200-2-530	219.1	530	985	9.66	2172	10	9	210	8.27	25	30	284	6.6	64	14.5
514-200-2-530	219.1	530	985	9.66	2172	10	9	208	8.19	39	30	328	5.5	54	12.2
515-200-2-530	219.1	530	985	9.66	2172	10	9	210	8.27	70			6.6	65	14.6
513-200-3-530	219.1	530	2125	20.8	4684	15	12	217	8.54	40	50	312	12.1	119	26.7
514-200-3-530	219.1	530	2125	20.8	4684	15	12	217	8.54	47	50	374	11.4	112	25.2
515-200-3-530	219.1	530	2125	20.8	4684	15	12	215	8.46	80			10.0	98	22.0
513-200-4-530	219.1	530	4293	42.1	9465	20	16	228	8.98	50	50	330	17.0	167	37.6
514-200-4-530	219.1	530	4293	42.1	9465	20	16	226	8.90	57	50	398	15.7	154	34.5
515-200-4-530	219.1	530	4293	42.1	9465	20	16	230	9.06	100			17.6	173	38.9
513-200-5-530	219.1	530	6324	62	13942	25	20	235	9.25	60	70	351	23.3	229	51.4
514-200-5-530	219.1	530	6324	62	13942	25	20	250	9.84	69	70	430	26.1	256	57.6
515-200-5-530	219.1	530	6324	62	13942	25	20	255	10.04	90			21.6	212	47.7
514-200-6-530	219.1	530	12754	125	28117	35	25	306	12.05	86	80	466	48.4	475	106.7
515-200-6-530	219.1	530	12754	125	28117	35	25	285	11.22	110			35.4	347	78.0
514-200-7-530	219.1	530	18132	178	39974	40	28	333	13.11	102	90	488	72.3	709	159.4
515-200-7-530	219.1	530	18132	178	39974	40	28	300	11.81	160			54.2	531	119.4
515-200-8-530	219.1	530	25524	250	56269	50	35	320	12.60	130			62.5	613	137.9
513-200-1-570	219.1	570	423	4.15	933	10	9	210	8.27	25	30	284	6.2	61	13.7
514-200-1-570	219.1	570	423	4.15	933	10	9	208	8.19	36	30	320	5.2	51	11.6
515-200-1-570	219.1	570	423	4.15	933	10	9	210	8.27	50			3.9	39	8.7
513-200-2-570	219.1	570	985	9.66	2172	10	9	210	8.27	30	40	298	8.7	85	19.1
514-200-2-570	219.1	570	985	9.66	2172	10	9	208	8.19	39	40	332	7.9	77	17.4
515-200-2-570	219.1	570	985	9.66	2172	10	9	210	8.27	80			7.5	74	16.6
513-200-3-570	219.1	570	2125	20.8	4684	15	12	217	8.54	50	50	330	16.1	158	35.6
514-200-3-570	219.1	570	2125	20.8	4684	15	12	221	8.70	51	50	382	15.5	152	34.1
515-200-3-570	219.1	570	2125	20.8	4684	15	12	215	8.46	100			16.5	162	36.4
513-200-4-570	219.1	570	4293	42.1	9465	20	16	228	8.98	60	70	351	22.7	222	50.0
514-200-4-570	219.1	570	4293	42.1	9465	20	16	247	9.72	63	70	404	24.7	242	54.5
515-200-4-570	219.1	570	4293	42.1	9465	20	16	240	9.45	90			20.4	200	45.0
513-200-5-570	219.1	570	6324	62	13942	25	20	235	9.25	70	80	376	30.7	301	67.7
514-200-5-570	219.1	570	6324	62	13942	25	20	274	10.79	79	80	440	36.3	356	80.1
515-200-5-570	219.1	570	6324	62	13942	25	20	255	10.04	110			26.3	258	57.9
514-200-6-570	219.1	570	12754	125	28117	35	25	315	12.40	96	90	472	65.1	639	143.5
515-200-6-570	219.1	570	12754	125	28117	35	25	285	11.22	160			50.7	498	111.9
514-200-7-570	219.1	570	18132	178	39974	40	28	356	14.02	102	100	500	85.0	834	187.5
515-200-7-570	219.1	570	18132	178	39974	40	28	315	12.40	120			56.1	550	123.7
515-200-8-570	219.1	570	25524	250	56269	50	35	320	12.60	160			76.1	747	167.9

CLAMPS FOR RIGID STRUTS AND SNUBBERS N.B. 9" / 225mm

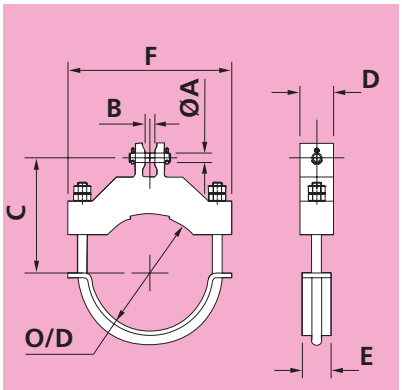

Type 513 Clamp

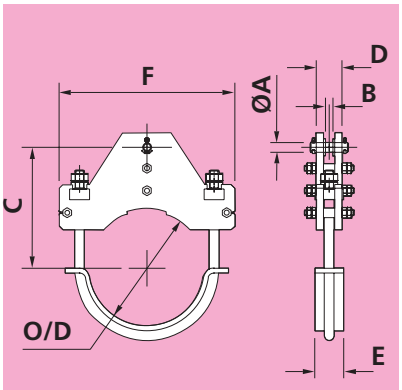

Type 514 Clamp

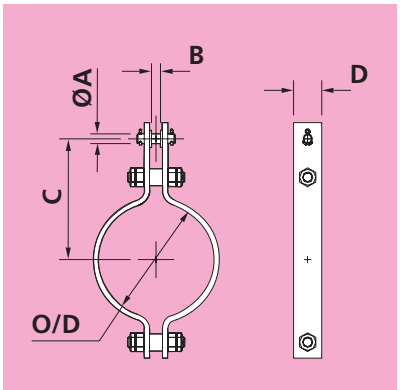

Type 515 Clamp

Fig. No.	Pipe O/D	Max. Pipe Temp	Max. Load			Dia. A	B	C		D	E	F	Clamp Weight		
	mm	°C	kgf	kN	lbs	mm	mm	mm	in	mm	mm	mm	kgf	N	lbs
513-225-1-400	244.5	400	423	4.15	933	10	9	222	8.74	20	20	290	4.8	47	10.6
514-225-1-400	244.5	400	423	4.15	933	10	9	220	8.66	36	20	336	5.7	56	12.6
515-225-1-400	244.5	400	423	4.15	933	10	9	220	8.66	50			4.2	41	9.3
513-225-2-400	244.5	400	985	9.66	2172	10	9	222	8.74	20	30	297	5.9	57	12.9
514-225-2-400	244.5	400	985	9.66	2172	10	9	220	8.66	39	30	346	6.6	65	14.6
515-225-2-400	244.5	400	985	9.66	2172	10	9	220	8.66	70			7.3	71	16.0
513-225-3-400	244.5	400	2125	20.8	4684	15	12	229	9.02	30	40	322	10.3	101	22.6
514-225-3-400	244.5	400	2125	20.8	4684	15	12	229	9.02	47	40	394	10.5	103	23.2
515-225-3-400	244.5	400	2125	20.8	4684	15	12	230	9.06	80			11.0	108	24.2
513-225-4-400	244.5	400	4293	42.1	9465	20	16	240	9.45	40	50	336	14.8	145	32.5
514-225-4-400	244.5	400	4293	42.1	9465	20	16	238	9.37	57	50	414	12.7	124	27.9
515-225-4-400	244.5	400	4293	42.1	9465	20	16	260	10.24	100			20.7	203	45.7
513-225-5-400	244.5	400	6324	62	13942	25	20	247	9.72	50	50	354	20.2	198	44.5
514-225-5-400	244.5	400	6324	62	13942	25	20	245	9.65	69	50	448	20.7	203	45.7
515-225-5-400	244.5	400	6324	62	13942	25	20	275	10.83	90			24.1	237	53.2
514-225-6-400	244.5	400	12754	125	28117	35	25	303	11.93	86	80	490	54.5	535	120.3
515-225-6-400	244.5	400	12754	125	28117	35	25	315	12.40	120			44.5	436	98.0
514-225-7-400	244.5	400	18132	178	39974	40	28	332	13.07	102	90	512	75.8	743	167.1
515-225-7-400	244.5	400	18132	178	39974	40	28	325	12.80	160			59.9	587	132.0
514-225-8-400	244.5	400	25524	250	56269	50	35	375	14.76	120	100	566	107.0	1049	235.9
515-225-8-400	244.5	400	25524	250	56269	50	35	370	14.57	140			81.6	800	179.9
513-225-1-490	244.5	490	423	4.15	933	10	9	222	8.74	20	20	290	4.8	47	10.6
514-225-1-490	244.5	490	423	4.15	933	10	9	220	8.66	36	20	336	5.7	56	12.6
515-225-1-490	244.5	490	423	4.15	933	10	9	220	8.66	50			4.2	41	9.3
513-225-2-490	244.5	490	985	9.66	2172	10	9	222	8.74	20	30	297	5.9	57	12.9
514-225-2-490	244.5	490	985	9.66	2172	10	9	220	8.66	39	30	346	6.7	65	14.7
515-225-2-490	244.5	490	985	9.66	2172	10	9	220	8.66	60			5.0	49	11.1
513-225-3-490	244.5	490	2125	20.8	4684	15	12	229	9.02	30	40	322	10.2	100	22.5
514-225-3-490	244.5	490	2125	20.8	4684	15	12	229	9.02	47	40	394	10.4	102	22.9
515-225-3-490	244.5	490	2125	20.8	4684	15	12	230	9.06	80			10.7	105	23.5
513-225-4-490	244.5	490	4293	42.1	9465	20	16	240	9.45	40	50	336	14.8	145	32.5
514-225-4-490	244.5	490	4293	42.1	9465	20	16	238	9.37	57	50	414	12.7	124	27.9
515-225-4-490	244.5	490	4293	42.1	9465	20	16	245	9.65	100			19.0	186	41.9
513-225-5-490	244.5	490	6324	62	13942	25	20	247	9.72	50	50	354	20.1	197	44.3
514-225-5-490	244.5	490	6324	62	13942	25	20	245	9.65	69	50	448	20.2	198	44.5
515-225-5-490	244.5	490	6324	62	13942	25	20	260	10.24	110			22.1	216	48.6
514-225-6-490	244.5	490	12754	125	28117	35	25	302	11.89	86	70	480	45.8	449	100.9
515-225-6-490	244.5	490	12754	125	28117	35	25	300	11.81	110			37.5	368	82.7
514-225-7-490	244.5	490	18132	178	39974	40	28	329	12.95	102	80	506	62.4	612	137.6
515-225-7-490	244.5	490	18132	178	39974	40	28	310	12.20	150			53.2	522	117.3
514-225-8-490	244.5	490	25524	250	56269	50	35	373	14.69	120	90	554	100.5	986	221.7
515-225-8-490	244.5	490	25524	250	56269	50	35	350	13.78	130			69.0	676	152.1

CLAMPS FOR RIGID STRUTS AND SNUBBERS N.B. 9" / 225mm

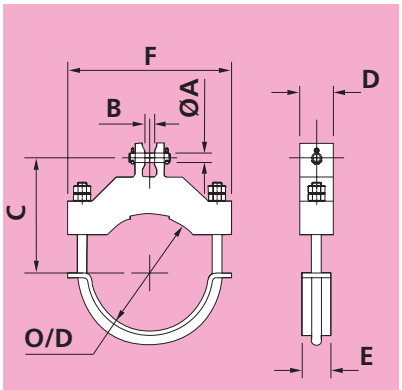

Type 513 Clamp

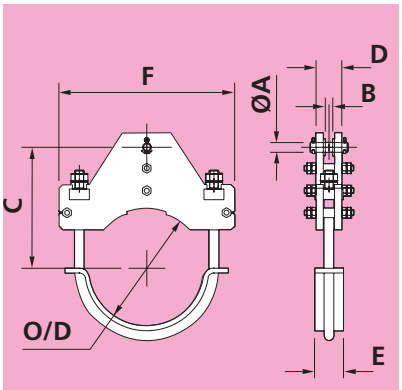

Type 514 Clamp

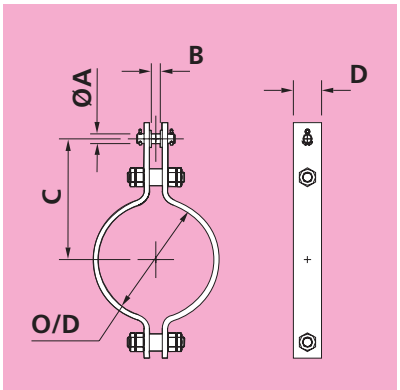

Type 515 Clamp

Fig. No.	Pipe O/D	Max. Pipe Temp	Max. Load			Dia. A	B	C		D	E	F	Clamp Weight		
	mm	°C	kgf	kN	lbs	mm	mm	mm	in	mm	mm	mm	kgf	N	lbs
513-225-1-530	244.5	530	423	4.15	933	10	9	222	8.74	20	30	297	5.4	53	11.8
514-225-1-530	244.5	530	423	4.15	933	10	9	220	8.66	36	30	338	6.2	60	13.6
515-225-1-530	244.5	530	423	4.15	933	10	9	220	8.66	50			4.2	41	9.3
513-225-2-530	244.5	530	985	9.66	2172	10	9	222	8.74	25	30	308	7.5	74	16.6
514-225-2-530	244.5	530	985	9.66	2172	10	9	220	8.66	39	30	352	7.5	73	16.4
515-225-2-530	244.5	530	985	9.66	2172	10	9	220	8.66	70			7.0	69	15.5
513-225-3-530	244.5	530	2125	20.8	4684	15	12	229	9.02	40	50	336	13.9	136	30.5
514-225-3-530	244.5	530	2125	20.8	4684	15	12	229	9.02	47	50	398	12.3	121	27.1
515-225-3-530	244.5	530	2125	20.8	4684	15	12	230	9.06	80			10.7	105	23.5
513-225-4-530	244.5	530	4293	42.1	9465	20	16	240	9.45	50	50	354	19.2	189	42.4
514-225-4-530	244.5	530	4293	42.1	9465	20	16	238	9.37	57	50	422	16.4	161	36.1
515-225-4-530	244.5	530	4293	42.1	9465	20	16	245	9.65	100			19.0	186	41.9
513-225-5-530	244.5	530	6324	62	13942	25	20	247	9.72	60	70	375	26.1	256	57.5
514-225-5-530	244.5	530	6324	62	13942	25	20	262	10.31	69	70	454	26.8	263	59.0
515-225-5-530	244.5	530	6324	62	13942	25	20	270	10.63	90			23.1	227	50.9
514-225-6-530	244.5	530	12754	125	28117	35	25	312	12.28	86	80	490	56.2	551	124.0
515-225-6-530	244.5	530	12754	125	28117	35	25	300	11.81	120			40.8	400	89.9
514-225-7-530	244.5	530	18132	178	39974	40	28	341	13.43	102	90	512	77.7	762	171.4
515-225-7-530	244.5	530	18132	178	39974	40	28	325	12.80	120			58.5	573	128.9
514-225-8-530	244.5	530	25524	250	56269	50	35	380	14.96	120	100	566	108.4	1063	238.9
515-225-8-530	244.5	530	25524	250	56269	50	35	350	13.78	140			73.9	725	163.0
513-225-1-570	244.5	570	423	4.15	933	10	9	222	8.74	25	30	308	7.1	69	15.6
514-225-1-570	244.5	570	423	4.15	933	10	9	220	8.66	36	30	344	6.7	66	14.9
515-225-1-570	244.5	570	423	4.15	933	10	9	220	8.66	60			5.0	49	11.1
513-225-2-570	244.5	570	985	9.66	2172	10	9	222	8.74	30	40	322	10.0	98	22.0
514-225-2-570	244.5	570	985	9.66	2172	10	9	220	8.66	39	40	356	9.2	91	20.4
515-225-2-570	244.5	570	985	9.66	2172	10	9	220	8.66	80			10.1	99	22.2
513-225-3-570	244.5	570	2125	20.8	4684	15	12	229	9.02	50	50	354	18.4	180	40.5
514-225-3-570	244.5	570	2125	20.8	4684	15	12	233	9.17	51	50	406	16.1	157	35.4
515-225-3-570	244.5	570	2125	20.8	4684	15	12	230	9.06	100			17.8	175	39.3
513-225-4-570	244.5	570	4293	42.1	9465	20	16	240	9.45	60	70	375	25.5	250	56.2
514-225-4-570	244.5	570	4293	42.1	9465	20	16	259	10.20	63	70	428	25.3	249	55.9
515-225-4-570	244.5	570	4293	42.1	9465	20	16	250	9.84	90			21.5	211	47.5
513-225-5-570	244.5	570	6324	62	13942	25	20	247	9.72	70	80	400	34.1	334	75.2
514-225-5-570	244.5	570	6324	62	13942	25	20	286	11.26	79	80	464	42.3	414	93.2
515-225-5-570	244.5	570	6324	62	13942	25	20	280	11.02	100			31.3	307	69.1
514-225-6-570	244.5	570	12754	125	28117	35	25	327	12.87	96	90	496	75.4	739	166.1
515-225-6-570	244.5	570	12754	125	28117	35	25	315	12.40	120			55.7	546	122.9
514-225-7-570	244.5	570	18132	178	39974	40	28	363	14.29	102	100	524	95.3	935	210.2
515-225-7-570	244.5	570	18132	178	39974	40	28	325	12.80	130			63.1	619	139.1
514-225-8-570	244.5	570	25524	250	56269	50	35	402	15.83	120	120	574	137.9	1352	304.0
515-225-8-570	244.5	570	25524	250	56269	50	35	350	13.78	180			93.8	920	206.8

CLAMPS FOR RIGID STRUTS AND SNUBBERS N.B. 10" / 250mm

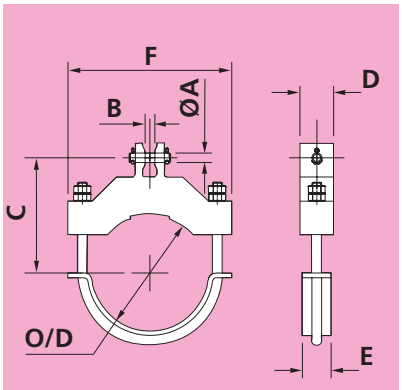

Type 513 Clamp

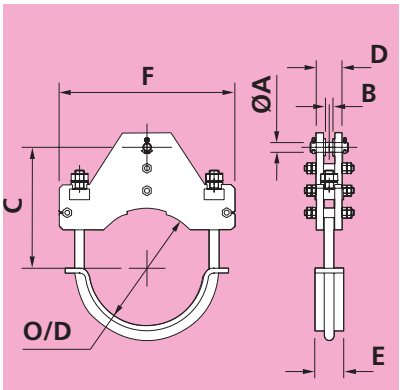

Type 514 Clamp

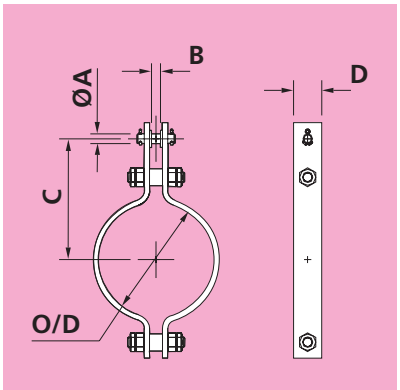

Type 515 Clamp

Fig. No.	Pipe O/D	Max. Pipe Temp	Max. Load			Dia. A	B	C		D	E	F	Clamp Weight		
	mm	°C	kgf	kN	lbs	mm	mm	mm	in	mm	mm	mm	kgf	N	lbs
513-250-1-400	273	400	423	4.15	933	10	9	237	9.33	20	20	320	5.8	56	12.7
514-250-1-400	273	400	423	4.15	933	10	9	235	9.25	36	20	366	7.7	75	16.9
515-250-1-400	273	400	423	4.15	933	10	9	235	9.25	50			4.6	45	10.1
513-250-2-400	273	400	985	9.66	2172	10	9	237	9.33	20	30	327	6.9	67	15.1
514-250-2-400	273	400	985	9.66	2172	10	9	235	9.25	39	30	376	8.4	82	18.5
515-250-2-400	273	400	985	9.66	2172	10	9	235	9.25	70			7.9	77	17.4
513-250-3-400	273	400	2125	20.8	4684	15	12	244	9.61	30	40	352	12.0	118	26.4
514-250-3-400	273	400	2125	20.8	4684	15	12	244	9.61	47	40	424	11.9	116	26.1
515-250-3-400	273	400	2125	20.8	4684	15	12	240	9.45	80			11.8	115	25.9
513-250-4-400	273	400	4293	42.1	9465	20	16	255	10.04	40	50	366	17.2	168	37.8
514-250-4-400	273	400	4293	42.1	9465	20	16	253	9.96	57	50	444	13.1	128	28.8
515-250-4-400	273	400	4293	42.1	9465	20	16	275	10.83	100			22.2	217	48.8
513-250-5-400	273	400	6324	62	13942	25	20	263	10.35	50	50	384	23.2	228	51.2
514-250-5-400	273	400	6324	62	13942	25	20	260	10.24	69	50	478	21.8	214	48.2
515-250-5-400	273	400	6324	62	13942	25	20	295	11.61	90			26.1	256	57.5
514-250-6-400	273	400	12754	125	28117	35	25	313	12.32	86	80	520	49.2	483	108.5
515-250-6-400	273	400	12754	125	28117	35	25	330	12.99	120			47.0	461	103.6
514-250-7-400	273	400	18132	178	39974	40	28	344	13.54	102	90	542	77.4	759	170.7
515-250-7-400	273	400	18132	178	39974	40	28	360	14.17	120			67.4	661	148.6
514-250-8-400	273	400	25524	250	56269	50	35	386	15.20	120	100	596	122.7	1203	270.4
515-250-8-400	273	400	25524	250	56269	50	35	390	15.35	140			86.4	847	190.4
514-250-9-400	273	400	55135	541	121552	70	49	537	21.14	148	130	660	258.0	2530	568.7
513-250-1-490	273	490	423	4.15	933	10	9	237	9.33	20	20	320	5.8	56	12.7
514-250-1-490	273	490	423	4.15	933	10	9	235	9.25	36	20	366	7.7	75	16.9
515-250-1-490	273	490	423	4.15	933	10	9	235	9.25	50			4.6	45	10.1
513-250-2-490	273	490	985	9.66	2172	10	9	237	9.33	20	30	327	6.9	67	15.1
514-250-2-490	273	490	985	9.66	2172	10	9	235	9.25	39	30	376	8.4	83	18.6
515-250-2-490	273	490	985	9.66	2172	10	9	235	9.25	70			7.7	75	16.9
513-250-3-490	273	490	2125	20.8	4684	15	12	244	9.61	30	40	352	11.9	117	26.3
514-250-3-490	273	490	2125	20.8	4684	15	12	244	9.61	47	40	424	11.9	116	26.2
515-250-3-490	273	490	2125	20.8	4684	15	12	240	9.45	80			11.4	112	25.2
513-250-4-490	273	490	4293	42.1	9465	20	16	255	10.04	40	50	366	17.2	168	37.8
514-250-4-490	273	490	4293	42.1	9465	20	16	253	9.96	57	50	444	13.2	129	29.0
515-250-4-490	273	490	4293	42.1	9465	20	16	270	10.63	100			21.2	208	46.8
513-250-5-490	273	490	6324	62	13942	25	20	262	10.31	50	50	384	23.2	227	51.1
514-250-5-490	273	490	6324	62	13942	25	20	260	10.24	69	50	478	21.4	210	47.1
515-250-5-490	273	490	6324	62	13942	25	20	295	11.61	90			26.1	256	57.5
514-250-6-490	273	490	12754	125	28117	35	25	312	12.28	86	70	510	44.2	433	97.4
515-250-6-490	273	490	12754	125	28117	35	25	320	12.60	120			44.9	441	99.0
514-250-7-490	273	490	18132	178	39974	40	28	340	13.39	102	80	536	71.2	699	157.0
515-250-7-490	273	490	18132	178	39974	40	28	330	12.99	160			60.6	595	133.7
514-250-8-490	273	490	25524	250	56269	50	35	384	15.12	120	90	584	110.8	1087	244.3
515-250-8-490	273	490	25524	250	56269	50	35	370	14.57	130			73.4	720	161.8
514-250-9-490	273	490	55135	541	121552	70	49	528	20.79	148	130	660	254.4	2495	560.8

CLAMPS FOR RIGID STRUTS AND SNUBBERS N.B. 10" / 250mm

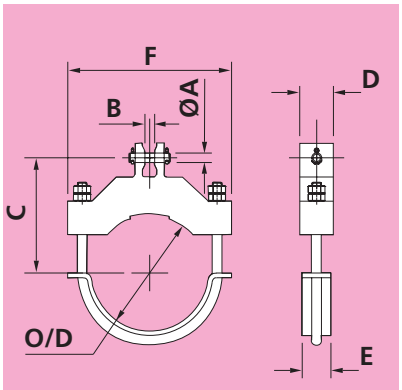

Type 513 Clamp

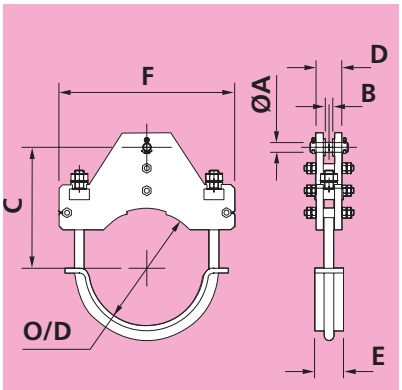

Type 514 Clamp

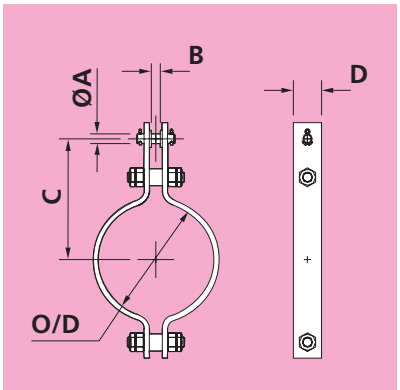

Type 515 Clamp

Fig. No.	Pipe O/D	Max. Pipe Temp	Max. Load			Dia. A	B	C		D	E	F	Clamp Weight		
	mm	°C	kgf	kN	lbs	mm	mm	mm	in	mm	mm	mm	kgf	N	lbs
513-250-1-530	273	530	423	4.15	933	10	9	237	9.33	20	30	327	6.3	62	14.0
514-250-1-530	273	530	423	4.15	933	10	9	235	9.25	36	30	368	8.2	80	18.0
515-250-1-530	273	530	423	4.15	933	10	9	235	9.25	50			4.6	45	10.1
513-250-2-530	273	530	985	9.66	2172	10	9	237	9.33	25	30	338	8.8	86	19.4
514-250-2-530	273	530	985	9.66	2172	10	9	235	9.25	39	30	382	9.2	90	20.3
515-250-2-530	273	530	985	9.66	2172	10	9	235	9.25	70			7.7	75	16.9
513-250-3-530	273	530	2125	20.8	4684	15	12	244	9.61	40	50	366	16.1	158	35.6
514-250-3-530	273	530	2125	20.8	4684	15	12	244	9.61	47	50	428	12.8	126	28.3
515-250-3-530	273	530	2125	20.8	4684	15	12	240	9.45	100			14.3	140	31.4
513-250-4-530	273	530	4293	42.1	9465	20	16	255	10.04	50	50	384	22.2	218	49.0
514-250-4-530	273	530	4293	42.1	9465	20	16	253	9.96	57	50	452	17.7	173	39.0
515-250-4-530	273	530	4293	42.1	9465	20	16	270	10.63	110			23.3	228	51.4
513-250-5-530	273	530	6324	62	13942	25	20	262	10.31	60	70	405	29.8	292	65.6
514-250-5-530	273	530	6324	62	13942	25	20	277	10.91	69	70	484	27.9	273	61.4
515-250-5-530	273	530	6324	62	13942	25	20	285	11.22	90			24.7	242	54.5
514-250-6-530	273	530	12754	125	28117	35	25	322	12.68	86	80	520	51.3	503	113.2
515-250-6-530	273	530	12754	125	28117	35	25	320	12.60	140			52.1	511	114.8
514-250-7-530	273	530	18132	178	39974	40	28	351	13.82	102	90	542	79.2	776	174.5
515-250-7-530	273	530	18132	178	39974	40	28	345	13.58	120			62.5	612	137.7
514-250-8-530	273	530	25524	250	56269	50	35	390	15.35	120	100	596	124.4	1220	274.2
515-250-8-530	273	530	25524	250	56269	50	35	370	14.57	150			84.0	824	185.2
514-250-9-530	273	530	55135	541	121552	70	49	533	20.98	148	130	660	256.7	2518	566.0
513-250-1-570	273	570	423	4.15	933	10	9	237	9.33	25	30	338	8.3	82	18.4
514-250-1-570	273	570	423	4.15	933	10	9	235	9.25	36	30	374	8.8	86	19.4
515-250-1-570	273	570	423	4.15	933	10	9	235	9.25	60			5.5	54	12.1
513-250-2-570	273	570	985	9.66	2172	10	9	237	9.33	30	40	352	11.5	113	25.3
514-250-2-570	273	570	985	9.66	2172	10	9	235	9.25	39	40	386	10.0	98	22.0
515-250-2-570	273	570	985	9.66	2172	10	9	235	9.25	80			10.9	107	24.1
513-250-3-570	273	570	2125	20.8	4684	15	12	244	9.61	50	50	384	21.2	208	46.7
514-250-3-570	273	570	2125	20.8	4684	15	12	248	9.76	51	50	436	16.2	158	35.6
515-250-3-570	273	570	2125	20.8	4684	15	12	245	9.65	100			19.3	189	42.5
513-250-4-570	273	570	4293	42.1	9465	20	16	255	10.04	60	70	405	29.1	286	64.2
514-250-4-570	273	570	4293	42.1	9465	20	16	274	10.79	63	70	458	26.7	262	58.8
515-250-4-570	273	570	4293	42.1	9465	20	16	270	10.63	90			23.5	230	51.8
513-250-5-570	273	570	6324	62	13942	25	20	264	10.39	70	80	430	38.7	380	85.4
514-250-5-570	273	570	6324	62	13942	25	20	301	11.85	79	80	494	47.6	467	105.0
515-250-5-570	273	570	6324	62	13942	25	20	295	11.61	100			33.5	328	73.8
514-250-6-570	273	570	12754	125	28117	35	25	342	13.46	96	90	526	71.5	701	157.6
515-250-6-570	273	570	12754	125	28117	35	25	335	13.19	120			61.0	598	134.5
514-250-7-570	273	570	18132	178	39974	40	28	373	14.69	102	100	554	89.8	881	198.0
515-250-7-570	273	570	18132	178	39974	40	28	345	13.58	140			72.4	710	159.7
514-250-8-570	273	570	25524	250	56269	50	35	412	16.22	120	120	604	143.9	1411	317.2
515-250-8-570	273	570	25524	250	56269	50	35	370	14.57	200			110.5	1084	243.7
514-250-9-570	273	570	55135	541	121552	70	49	532	20.94	158	130	660	276.6	2713	609.9

CLAMPS FOR RIGID STRUTS AND SNUBBERS N.B. 12" / 300mm

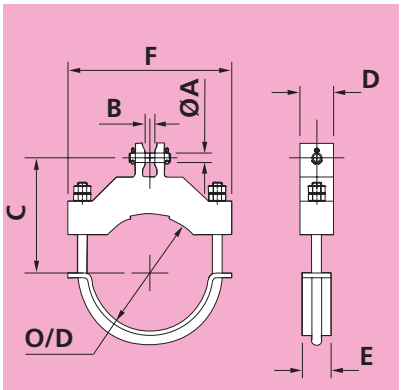

Type 513 Clamp

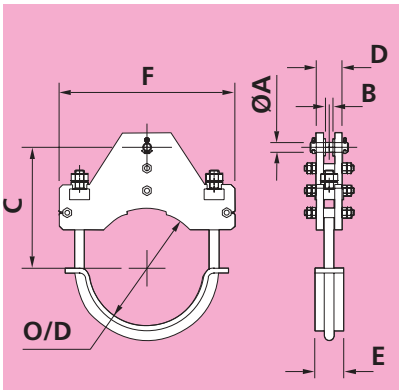

Type 514 Clamp

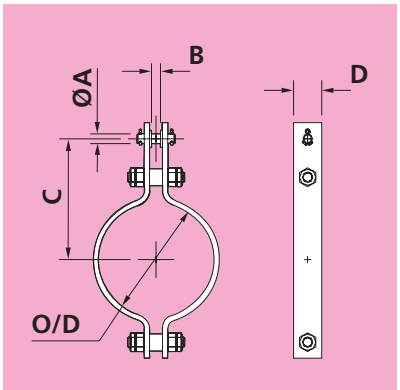

Type 515 Clamp

Fig. No.	Pipe O/D	Max. Pipe Temp	Max. Load			Dia. A	B	C		D	E	F	Clamp Weight		
	mm	°C	kgf	kN	lbs	mm	mm	mm	in	mm	mm	mm	kgf	N	lbs
513-300-1-400	323.9	400	423	4.15	933	10	9	263	10.35	20	20	372	7.4	73	16.4
514-300-1-400	323.9	400	423	4.15	933	10	9	262	10.31	36	20	418	9.9	97	21.7
515-300-1-400	323.9	400	423	4.15	933	10	9	260	10.24	50			5.2	51	11.5
513-300-2-400	323.9	400	985	9.66	2172	10	9	263	10.35	20	30	379	8.7	86	19.3
514-300-2-400	323.9	400	985	9.66	2172	10	9	262	10.31	39	30	428	10.3	101	22.8
515-300-2-400	323.9	400	985	9.66	2172	10	9	260	10.24	70			8.9	87	19.6
513-300-3-400	323.9	400	2125	20.8	4684	15	12	270	10.63	30	40	404	15.1	148	33.3
514-300-3-400	323.9	400	2125	20.8	4684	15	12	269	10.59	47	40	476	11.9	116	26.2
515-300-3-400	323.9	400	2125	20.8	4684	15	12	275	10.83	100			17.1	168	37.7
513-300-4-400	323.9	400	4293	42.1	9465	20	16	284	11.18	40	50	418	21.8	213	48.0
514-300-4-400	323.9	400	4293	42.1	9465	20	16	279	10.98	57	50	496	13.9	137	30.7
515-300-4-400	323.9	400	4293	42.1	9465	20	16	300	11.81	100			24.6	241	54.2
513-300-5-400	323.9	400	6324	62	13942	25	20	296	11.65	50	50	436	29.4	288	64.8
514-300-5-400	323.9	400	6324	62	13942	25	20	287	11.30	63	50	530	28.7	282	63.3
515-300-5-400	323.9	400	6324	62	13942	25	20	325	12.80	100			33.1	325	73.0
514-300-6-400	323.9	400	12754	125	28117	35	25	333	13.11	86	80	572	53.6	525	118.1
515-300-6-400	323.9	400	12754	125	28117	35	25	360	14.17	140			60.0	589	132.4
514-300-7-400	323.9	400	18132	178	39974	40	28	371	14.61	102	90	594	86.6	850	191.0
515-300-7-400	323.9	400	18132	178	39974	40	28	390	15.35	120			73.8	724	162.8
514-300-8-400	323.9	400	25524	250	56269	50	35	402	15.83	120	100	648	133.0	1304	293.2
515-300-8-400	323.9	400	25524	250	56269	50	35	415	16.34	160			105.1	1031	231.8
514-300-9-400	323.9	400	55135	541	121552	70	49	555	21.85	148	130	712	287.2	2816	633.1
514-300-10-400	323.9	400	70330	690	155050	80	55	611	24.06	166	150	746	371.1	3639	818.1
513-300-1-490	323.9	490	423	4.15	933	10	9	263	10.35	20	20	372	7.4	73	16.4
514-300-1-490	323.9	490	423	4.15	933	10	9	262	10.31	36	20	418	9.9	97	21.8
515-300-1-490	323.9	490	423	4.15	933	10	9	260	10.24	50			5.2	51	11.5
513-300-2-490	323.9	490	985	9.66	2172	10	9	263	10.35	20	30	379	8.7	86	19.3
514-300-2-490	323.9	490	985	9.66	2172	10	9	262	10.31	39	30	428	10.4	102	22.8
515-300-2-490	323.9	490	985	9.66	2172	10	9	260	10.24	70			8.9	87	19.6
513-300-3-490	323.9	490	2125	20.8	4684	15	12	270	10.63	30	40	404	15.1	148	33.3
514-300-3-490	323.9	490	2125	20.8	4684	15	12	269	10.59	47	40	476	12.2	120	26.9
515-300-3-490	323.9	490	2125	20.8	4684	15	12	265	10.43	80			13.0	128	28.7
513-300-4-490	323.9	490	4293	42.1	9465	20	16	283	11.14	40	50	418	21.6	212	47.7
514-300-4-490	323.9	490	4293	42.1	9465	20	16	279	10.98	57	50	496	14.2	139	31.3
515-300-4-490	323.9	490	4293	42.1	9465	20	16	295	11.61	100			23.7	232	52.2
513-300-5-490	323.9	490	6324	62	13942	25	20	295	11.61	50	50	436	29.2	286	64.4
514-300-5-490	323.9	490	6324	62	13942	25	20	285	11.22	63	50	530	28.6	280	63.0
515-300-5-490	323.9	490	6324	62	13942	25	20	320	12.60	100			31.9	313	70.3
514-300-6-490	323.9	490	12754	125	28117	35	25	326	12.83	86	70	562	44.2	433	97.4
515-300-6-490	323.9	490	12754	125	28117	35	25	350	13.78	140			57.7	566	127.3
514-300-7-490	323.9	490	18132	178	39974	40	28	354	13.94	102	80	588	68.1	668	150.2
515-300-7-490	323.9	490	18132	178	39974	40	28	385	15.16	120			71.4	701	157.5
514-300-8-490	323.9	490	25524	250	56269	50	35	401	15.79	120	90	636	110.1	1080	242.8
515-300-8-490	323.9	490	25524	250	56269	50	35	400	15.75	150			91.9	902	202.7
514-300-9-490	323.9	490	55135	541	121552	70	49	546	21.50	148	130	712	283.7	2782	625.5
514-300-10-490	323.9	490	70330	690	155050	80	55	602	23.70	166	150	746	367.0	3599	809.0

CLAMPS FOR RIGID STRUTS AND SNUBBERS N.B. 12" / 300mm

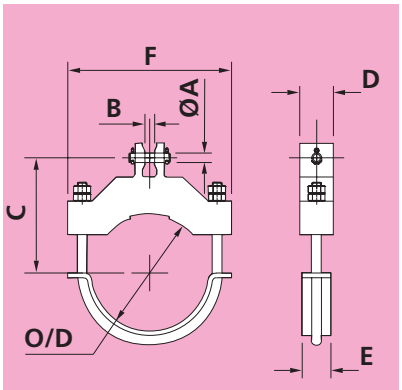

Type 513 Clamp

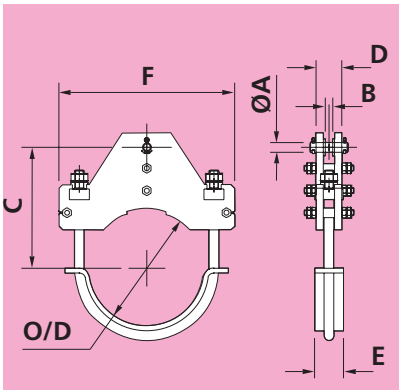

Type 514 Clamp

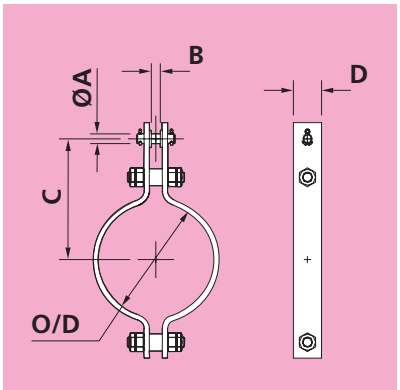

Type 515 Clamp

Fig. No.	Pipe O/D	Max. Pipe Temp	Max. Load			Dia. A	B	C		D	E	F	Clamp Weight		
	mm	°C	kgf	kN	lbs	mm	mm	mm	in	mm	mm	mm	kgf	N	lbs
513-300-1-530	323.9	530	423	4.15	933	10	9	263	10.35	20	30	379	8.1	79	17.9
514-300-1-530	323.9	530	423	4.15	933	10	9	262	10.31	36	30	420	10.4	102	23.0
515-300-1-530	323.9	530	423	4.15	933	10	9	260	10.24	50			5.2	51	11.5
513-300-2-530	323.9	530	985	9.66	2172	10	9	263	10.35	25	30	390	11.2	110	24.7
514-300-2-530	323.9	530	985	9.66	2172	10	9	262	10.31	39	30	434	10.5	103	23.2
515-300-2-530	323.9	530	985	9.66	2172	10	9	260	10.24	70			8.9	87	19.6
513-300-3-530	323.9	530	2125	20.8	4684	15	12	270	10.63	40	50	418	20.3	199	44.7
514-300-3-530	323.9	530	2125	20.8	4684	15	12	269	10.59	47	50	480	12.6	124	27.8
515-300-3-530	323.9	530	2125	20.8	4684	15	12	265	10.43	100			16.2	159	35.8
513-300-4-530	323.9	530	4293	42.1	9465	20	16	281	11.06	50	50	436	27.8	272	61.2
514-300-4-530	323.9	530	4293	42.1	9465	20	16	280	11.02	57	50	504	18.0	177	39.8
515-300-4-530	323.9	530	4293	42.1	9465	20	16	305	12.01	90			27.1	266	59.7
513-300-5-530	323.9	530	6324	62	13942	25	20	293	11.54	60	70	457	37.1	363	81.7
514-300-5-530	323.9	530	6324	62	13942	25	20	304	11.97	69	70	536	30.1	295	66.3
515-300-5-530	323.9	530	6324	62	13942	25	20	320	12.60	110			35.0	343	77.1
514-300-6-530	323.9	530	12754	125	28117	35	25	336	13.23	86	80	572	54.0	530	119.1
515-300-6-530	323.9	530	12754	125	28117	35	25	350	13.78	160			65.7	644	144.8
514-300-7-530	323.9	530	18132	178	39974	40	28	371	14.61	102	90	594	86.2	845	190.0
515-300-7-530	323.9	530	18132	178	39974	40	28	375	14.76	120			68.9	675	151.8
514-300-8-530	323.9	530	25524	250	56269	50	35	406	15.98	120	100	648	134.8	1322	297.2
515-300-8-530	323.9	530	25524	250	56269	50	35	400	15.75	170			103.6	1016	228.4
514-300-9-530	323.9	530	55135	541	121552	70	49	552	21.73	148	130	712	286.2	2807	631.0
514-300-10-530	323.9	530	70330	690	155050	80	55	603	23.74	166	150	746	367.5	3604	810.2
513-300-1-570	323.9	570	423	4.15	933	10	9	263	10.35	25	30	390	10.6	104	23.3
514-300-1-570	323.9	570	423	4.15	933	10	9	262	10.31	36	30	426	11.1	109	24.5
515-300-1-570	323.9	570	423	4.15	933	10	9	260	10.24	70			8.7	85	19.2
513-300-2-570	323.9	570	985	9.66	2172	10	9	263	10.35	30	40	404	14.4	142	31.8
514-300-2-570	323.9	570	985	9.66	2172	10	9	262	10.31	39	40	438	9.6	94	21.2
515-300-2-570	323.9	570	985	9.66	2172	10	9	260	10.24	80			12.5	123	27.6
513-300-3-570	323.9	570	2125	20.8	4684	15	12	270	10.63	50	50	436	26.6	261	58.7
514-300-3-570	323.9	570	2125	20.8	4684	15	12	275	10.83	51	50	488	16.4	161	36.2
515-300-3-570	323.9	570	2125	20.8	4684	15	12	275	10.83	100			22.0	216	48.6
513-300-4-570	323.9	570	4293	42.1	9465	20	16	282	11.10	60	70	457	35.9	352	79.2
514-300-4-570	323.9	570	4293	42.1	9465	20	16	301	11.85	63	70	510	29.2	286	64.3
515-300-4-570	323.9	570	4293	42.1	9465	20	16	305	12.01	110			33.0	324	72.8
513-300-5-570	323.9	570	6324	62	13942	25	20	296	11.65	70	80	482	47.5	466	104.7
514-300-5-570	323.9	570	6324	62	13942	25	20	328	12.91	79	80	546	54.0	529	119.0
515-300-5-570	323.9	570	6324	62	13942	25	20	325	12.80	100			37.5	368	82.7
514-300-6-570	323.9	570	12754	125	28117	35	25	369	14.53	86	90	578	71.5	701	157.6
515-300-6-570	323.9	570	12754	125	28117	35	25	365	14.37	120			67.4	661	148.7
514-300-7-570	323.9	570	18132	178	39974	40	28	389	15.31	102	100	606	98.6	967	217.5
515-300-7-570	323.9	570	18132	178	39974	40	28	375	14.76	160			91.0	892	200.6
514-300-8-570	323.9	570	25524	250	56269	50	35	430	16.93	120	120	656	163.8	1607	361.2
515-300-8-570	323.9	570	25524	250	56269	50	35	400	15.75	220			132.8	1302	292.7
514-300-9-570	323.9	570	55135	541	121552	70	49	548	21.57	158	130	712	308.0	3020	679.0
514-300-10-570	323.9	570	70330	690	155050	80	55	600	23.62	176	150	746	390.4	3829	860.8

CLAMPS FOR RIGID STRUTS AND SNUBBERS N.B. 14" / 350mm

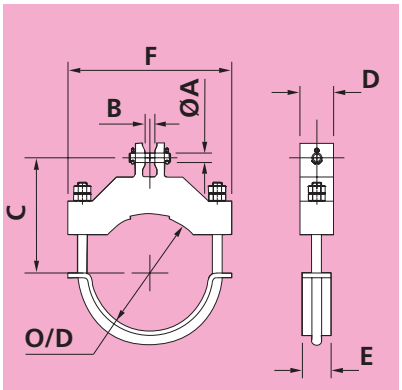

Type 513 Clamp

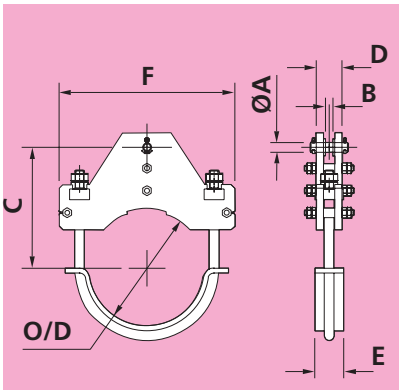

Type 514 Clamp

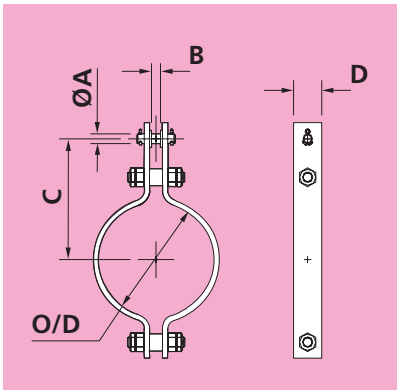

Type 515 Clamp

Fig. No.	Pipe O/D	Max. Pipe Temp	Max. Load			Dia. A	B	C		D	E	F	Clamp Weight		
	mm	°C	kgf	kN	lbs	mm	mm	mm	in	mm	mm	mm	kgf	N	lbs
513-350-1-400	355.6	400	423	4.15	933	10	9	279	10.98	20	20	404	8.7	85	19.2
514-350-1-400	355.6	400	423	4.15	933	10	9	278	10.94	36	20	450	10.1	99	22.2
515-350-1-400	355.6	400	423	4.15	933	10	9	275	10.83	50			5.6	55	12.4
513-350-2-400	355.6	400	985	9.66	2172	10	9	279	10.98	20	30	411	10.1	99	22.2
514-350-2-400	355.6	400	985	9.66	2172	10	9	278	10.94	39	30	460	10.0	98	22.1
515-350-2-400	355.6	400	985	9.66	2172	10	9	275	10.83	70			9.6	94	21.2
513-350-3-400	355.6	400	2125	20.8	4684	15	12	286	11.26	30	40	436	17.2	169	37.9
514-350-3-400	355.6	400	2125	20.8	4684	15	12	285	11.22	47	40	508	10.8	106	23.9
515-350-3-400	355.6	400	2125	20.8	4684	15	12	290	11.42	100			18.2	179	40.2
513-350-4-400	355.6	400	4293	42.1	9465	20	16	303	11.93	40	50	450	25.0	245	55.1
514-350-4-400	355.6	400	4293	42.1	9465	20	16	295	11.61	57	50	528	14.5	142	31.9
515-350-4-400	355.6	400	4293	42.1	9465	20	16	320	12.60	110			29.0	284	63.8
513-350-5-400	355.6	400	6324	62	13942	25	20	316	12.44	50	50	468	33.5	329	73.9
514-350-5-400	355.6	400	6324	62	13942	25	20	301	11.85	63	50	562	30.2	296	66.6
515-350-5-400	355.6	400	6324	62	13942	25	20	345	13.58	110			38.7	380	85.4
514-350-6-400	355.6	400	12754	125	28117	35	25	349	13.74	86	80	604	54.7	537	120.7
515-350-6-400	355.6	400	12754	125	28117	35	25	375	14.76	150			67.5	662	148.7
514-350-7-400	355.6	400	18132	178	39974	40	28	387	15.24	102	90	626	91.9	901	202.6
515-350-7-400	355.6	400	18132	178	39974	40	28	410	16.14	120			78.1	765	172.1
514-350-8-400	355.6	400	25524	250	56269	50	35	413	16.26	120	100	680	126.3	1239	278.5
515-350-8-400	355.6	400	25524	250	56269	50	35	435	17.13	180			123.7	1213	272.8
514-350-9-400	355.6	400	55135	541	121552	70	49	566	22.28	148	130	744	277.5	2722	611.9
514-350-10-400	355.6	400	70330	690	155050	80	55	623	24.53	166	150	778	385.1	3776	848.9
514-350-11-400	355.6	400	90785	890	200144	90	60	641	25.24	214	190	856	563.3	5524	1241.8
513-350-1-490	355.6	490	423	4.15	933	10	9	279	10.98	20	20	404	8.7	85	19.2
514-350-1-490	355.6	490	423	4.15	933	10	9	278	10.94	36	20	450	10.1	99	22.2
515-350-1-490	355.6	490	423	4.15	933	10	9	275	10.83	50			5.6	55	12.4
513-350-2-490	355.6	490	985	9.66	2172	10	9	279	10.98	20	30	411	10.0	98	22.0
514-350-2-490	355.6	490	985	9.66	2172	10	9	278	10.94	39	30	460	10.1	99	22.2
515-350-2-490	355.6	490	985	9.66	2172	10	9	275	10.83	70			9.6	94	21.2
513-350-3-490	355.6	490	2125	20.8	4684	15	12	286	11.26	30	40	436	17.2	169	37.9
514-350-3-490	355.6	490	2125	20.8	4684	15	12	285	11.22	47	40	508	10.8	106	23.9
515-350-3-490	355.6	490	2125	20.8	4684	15	12	285	11.22	100			17.8	175	39.3
513-350-4-490	355.6	490	4293	42.1	9465	20	16	302	11.89	40	50	450	24.8	243	54.7
514-350-4-490	355.6	490	4293	42.1	9465	20	16	295	11.61	57	50	528	14.5	142	31.9
515-350-4-490	355.6	490	4293	42.1	9465	20	16	310	12.20	100			25.2	247	55.5
513-350-5-490	355.6	490	6324	62	13942	25	20	315	12.40	50	50	468	33.3	327	73.5
514-350-5-490	355.6	490	6324	62	13942	25	20	301	11.85	63	50	562	31.3	307	69.1
515-350-5-490	355.6	490	6324	62	13942	25	20	335	13.19	100			33.7	331	74.4
514-350-6-490	355.6	490	12754	125	28117	35	25	335	13.19	86	70	594	51.2	502	112.8
515-350-6-490	355.6	490	12754	125	28117	35	25	365	14.37	140			60.8	597	134.1
514-350-7-490	355.6	490	18132	178	39974	40	28	363	14.29	102	80	620	68.4	671	150.9
515-350-7-490	355.6	490	18132	178	39974	40	28	405	15.94	120			75.7	742	166.8
514-350-8-490	355.6	490	25524	250	56269	50	35	410	16.14	120	90	668	127.5	1251	281.2
515-350-8-490	355.6	490	25524	250	56269	50	35	415	16.34	160			102.4	1004	225.7
514-350-9-490	355.6	490	55135	541	121552	70	49	557	21.93	148	130	744	273.2	2679	602.2
514-350-10-490	355.6	490	70330	690	155050	80	55	613	24.13	166	150	778	379.8	3725	837.3
514-350-11-490	355.6	490	90785	890	200144	90	60	634	24.96	214	170	846	526.7	5165	1161.2

CLAMPS FOR RIGID STRUTS AND SNUBBERS N.B. 14" / 350mm

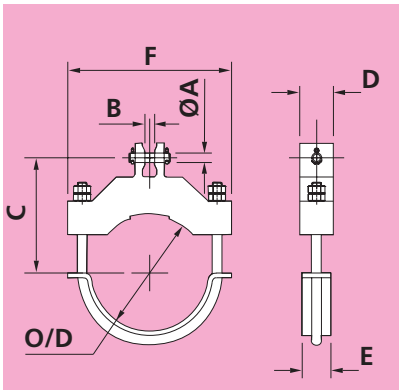

Type 513 Clamp

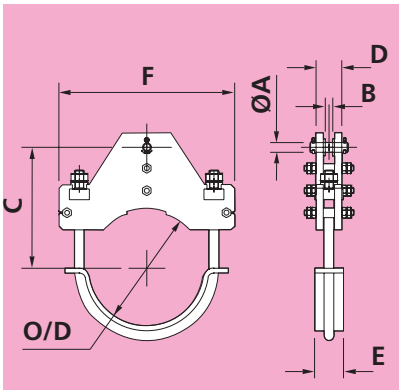

Type 514 Clamp

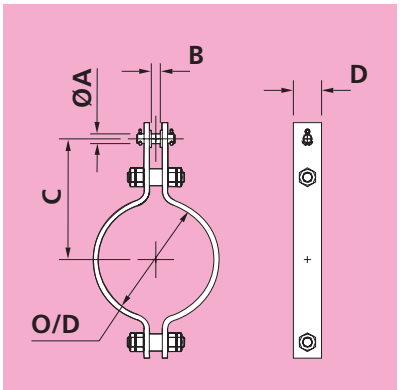

Type 515 Clamp

Fig. No.	Pipe O/D	Max. Pipe Temp	Max. Load			Dia. A	B	C		D	E	F	Clamp Weight		
	mm	°C	kgf	kN	lbs	mm	mm	mm	in	mm	mm	mm	kgf	N	lbs
513-350-1-530	355.6	530	423	4.15	933	10	9	279	10.98	20	30	411	9.4	92	20.7
514-350-1-530	355.6	530	423	4.15	933	10	9	278	10.94	36	30	452	10.7	105	23.5
515-350-1-530	355.6	530	423	4.15	933	10	9	275	10.83	50			5.6	55	12.4
513-350-2-530	355.6	530	985	9.66	2172	10	9	279	10.98	25	30	422	12.8	125	28.2
514-350-2-530	355.6	530	985	9.66	2172	10	9	278	10.94	39	30	466	9.3	92	20.6
515-350-2-530	355.6	530	985	9.66	2172	10	9	275	10.83	80			11.0	107	24.2
513-350-3-530	355.6	530	2125	20.8	4684	15	12	286	11.26	40	50	450	23.1	226	50.9
514-350-3-530	355.6	530	2125	20.8	4684	15	12	285	11.22	47	50	512	11.9	116	26.2
515-350-3-530	355.6	530	2125	20.8	4684	15	12	295	11.61	100			24.1	237	53.2
513-350-4-530	355.6	530	4293	42.1	9465	20	16	299	11.77	50	50	468	31.7	311	69.8
514-350-4-530	355.6	530	4293	42.1	9465	20	16	296	11.65	57	50	536	20.4	200	45.0
515-350-4-530	355.6	530	4293	42.1	9465	20	16	320	12.60	90			28.8	282	63.4
513-350-5-530	355.6	530	6324	62	13942	25	20	312	12.28	60	70	489	42.1	413	92.8
514-350-5-530	355.6	530	6324	62	13942	25	20	320	12.60	69	70	568	30.8	302	67.8
515-350-5-530	355.6	530	6324	62	13942	25	20	335	13.19	120			40.3	395	88.8
514-350-6-530	355.6	530	12754	125	28117	35	25	349	13.74	86	80	604	58.6	575	129.2
515-350-6-530	355.6	530	12754	125	28117	35	25	385	15.16	120			71.7	703	158.0
514-350-7-530	355.6	530	18132	178	39974	40	28	387	15.24	102	90	626	86.7	850	191.0
515-350-7-530	355.6	530	18132	178	39974	40	28	405	15.94	130			81.7	801	180.1
514-350-8-530	355.6	530	25524	250	56269	50	35	417	16.42	120	100	680	128.2	1257	282.6
515-350-8-530	355.6	530	25524	250	56269	50	35	415	16.34	180			114.6	1124	252.7
514-350-9-530	355.6	530	55135	541	121552	70	49	562	22.13	148	130	744	275.8	2704	608.0
514-350-10-530	355.6	530	70330	690	155050	80	55	616	24.25	166	150	778	381.8	3744	841.8
514-350-11-530	355.6	530	90785	890	200144	90	60	634	24.96	214	170	846	526.7	5165	1161.2
513-350-1-570	355.6	570	423	4.15	933	10	9	279	10.98	25	30	422	12.2	120	27.0
514-350-1-570	355.6	570	423	4.15	933	10	9	278	10.94	36	30	458	11.4	112	25.2
515-350-1-570	355.6	570	423	4.15	933	10	9	275	10.83	70			9.4	92	20.7
513-350-2-570	355.6	570	985	9.66	2172	10	9	279	10.98	30	40	436	16.4	161	36.2
514-350-2-570	355.6	570	985	9.66	2172	10	9	278	10.94	39	40	470	8.6	85	19.0
515-350-2-570	355.6	570	985	9.66	2172	10	9	275	10.83	80			13.7	134	30.2
513-350-3-570	355.6	570	2125	20.8	4684	15	12	286	11.26	50	50	468	30.2	296	66.5
514-350-3-570	355.6	570	2125	20.8	4684	15	12	291	11.46	51	50	520	16.3	160	35.9
515-350-3-570	355.6	570	2125	20.8	4684	15	12	290	11.42	100			23.5	231	51.8
513-350-4-570	355.6	570	4293	42.1	9465	20	16	301	11.85	60	70	489	40.9	401	90.1
514-350-4-570	355.6	570	4293	42.1	9465	20	16	317	12.48	63	70	542	28.9	283	63.6
515-350-4-570	355.6	570	4293	42.1	9465	20	16	320	12.60	110			35.0	344	77.2
513-350-5-570	355.6	570	6324	62	13942	25	20	315	12.40	70	80	514	53.5	525	118.0
514-350-5-570	355.6	570	6324	62	13942	25	20	344	13.54	79	80	578	58.5	574	129.0
515-350-5-570	355.6	570	6324	62	13942	25	20	345	13.58	110			45.0	441	99.1
514-350-6-570	355.6	570	12754	125	28117	35	25	385	15.16	86	90	610	73.0	716	160.9
515-350-6-570	355.6	570	12754	125	28117	35	25	385	15.16	120			71.7	703	158.0
514-350-7-570	355.6	570	18132	178	39974	40	28	398	15.67	102	100	638	99.2	973	218.7
515-350-7-570	355.6	570	18132	178	39974	40	28	405	15.94	170			105.8	1038	233.3
514-350-8-570	355.6	570	25524	250	56269	50	35	440	17.32	120	120	688	149.8	1469	330.2
515-350-8-570	355.6	570	25524	250	56269	50	35	435	17.13	180			147.0	1442	324.1
514-350-9-570	355.6	570	55135	541	121552	70	49	587	23.11	148	130	744	289.0	2834	637.1
514-350-10-570	355.6	570	70330	690	155050	80	55	611	24.06	176	150	778	405.6	3978	894.2
514-350-11-570	355.6	570	90785	890	200144	90	60	649	25.55	214	170	846	539.8	5294	1190.1

CLAMPS FOR RIGID STRUTS AND SNUBBERS N.B. 16" / 400mm

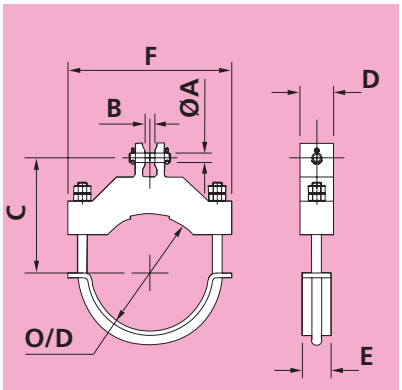

Type 513 Clamp

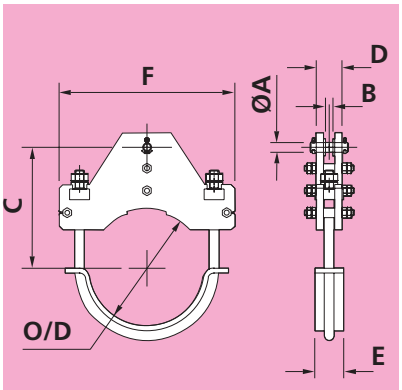

Type 514 Clamp

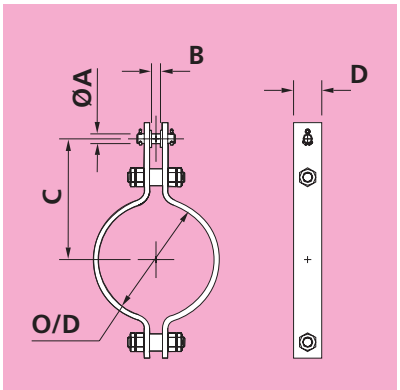

Type 515 Clamp

Fig. No.	Pipe O/D	Max. Pipe Temp	Max. Load			Dia. A	B	C		D	E	F	Clamp Weight		
	mm	°C	kgf	kN	lbs	mm	mm	mm	in	mm	mm	mm	kgf	N	lbs
513-400-1-400	406.4	400	423	4.15	933	10	9	304	11.97	20	20	454	10.7	104	23.5
514-400-1-400	406.4	400	423	4.15	933	10	9	303	11.93	36	20	500	9.1	89	20.0
515-400-1-400	406.4	400	423	4.15	933	10	9	300	11.81	50			6.2	61	13.7
513-400-2-400	406.4	400	985	9.66	2172	10	9	304	11.97	20	30	461	12.2	119	26.8
514-400-2-400	406.4	400	985	9.66	2172	10	9	303	11.93	39	30	510	8.0	79	17.7
515-400-2-400	406.4	400	985	9.66	2172	10	9	300	11.81	70			10.6	104	23.5
513-400-3-400	406.4	400	2125	20.8	4684	15	12	311	12.24	30	40	486	20.6	202	45.5
514-400-3-400	406.4	400	2125	20.8	4684	15	12	310	12.20	47	40	558	10.1	99	22.4
515-400-3-400	406.4	400	2125	20.8	4684	15	12	315	12.40	100			20.1	197	44.3
513-400-4-400	406.4	400	4293	42.1	9465	20	16	333	13.11	40	50	500	30.3	297	66.9
514-400-4-400	406.4	400	4293	42.1	9465	20	16	320	12.60	57	50	578	16.3	160	35.9
515-400-4-400	406.4	400	4293	42.1	9465	20	16	355	13.98	90			32.8	322	72.4
513-400-5-400	406.4	400	6324	62	13942	25	20	347	13.66	50	50	518	40.5	397	89.3
514-400-5-400	406.4	400	6324	62	13942	25	20	326	12.83	63	50	612	35.6	349	78.4
515-400-5-400	406.4	400	6324	62	13942	25	20	370	14.57	120			45.7	448	100.8
514-400-6-400	406.4	400	12754	125	28117	35	25	374	14.72	86	80	654	57.9	567	127.5
515-400-6-400	406.4	400	12754	125	28117	35	25	430	16.93	120			82.9	813	182.9
514-400-7-400	406.4	400	18132	178	39974	40	28	412	16.22	102	90	676	96.0	941	211.6
515-400-7-400	406.4	400	18132	178	39974	40	28	435	17.13	140			97.0	951	213.8
514-400-8-400	406.4	400	25524	250	56269	50	35	427	16.81	120	100	730	127.9	1254	282.0
515-400-8-400	406.4	400	25524	250	56269	50	35	465	18.31	200			147.4	1445	324.9
514-400-9-400	406.4	400	55135	541	121552	70	49	582	22.91	148	130	794	318.3	3122	701.8
514-400-10-400	406.4	400	70330	690	155050	80	55	639	25.16	166	150	828	399.6	3919	881.0
514-400-11-400	406.4	400	90785	890	200144	90	60	659	25.94	214	190	906	646.4	6339	1425.1
513-400-1-490	406.4	490	423	4.15	933	10	9	304	11.97	20	20	454	10.7	104	23.5
514-400-1-490	406.4	490	423	4.15	933	10	9	303	11.93	36	20	500	9.1	89	20.1
515-400-1-490	406.4	490	423	4.15	933	10	9	300	11.81	50			6.2	61	13.7
513-400-2-490	406.4	490	985	9.66	2172	10	9	304	11.97	20	30	461	12.2	119	26.8
514-400-2-490	406.4	490	985	9.66	2172	10	9	303	11.93	39	30	510	8.0	79	17.7
515-400-2-490	406.4	490	985	9.66	2172	10	9	300	11.81	70			10.6	104	23.5
513-400-3-490	406.4	490	2125	20.8	4684	15	12	311	12.24	30	40	486	20.5	201	45.2
514-400-3-490	406.4	490	2125	20.8	4684	15	12	310	12.20	47	40	558	10.2	100	22.4
515-400-3-490	406.4	490	2125	20.8	4684	15	12	310	12.20	100			19.7	193	43.4
513-400-4-490	406.4	490	4293	42.1	9465	20	16	332	13.07	40	50	500	30.2	296	66.5
514-400-4-490	406.4	490	4293	42.1	9465	20	16	320	12.60	57	50	578	15.9	156	35.1
515-400-4-490	406.4	490	4293	42.1	9465	20	16	350	13.78	90			31.8	312	70.2
513-400-5-490	406.4	490	6324	62	13942	25	20	345	13.58	50	50	518	40.3	396	89.0
514-400-5-490	406.4	490	6324	62	13942	25	20	326	12.83	63	50	612	35.9	352	79.1
515-400-5-490	406.4	490	6324	62	13942	25	20	365	14.37	110			40.7	399	89.8
514-400-6-490	406.4	490	12754	125	28117	35	25	350	13.78	86	70	644	64.4	632	142.0
515-400-6-490	406.4	490	12754	125	28117	35	25	395	15.55	160			75.7	743	167.0
514-400-7-490	406.4	490	18132	178	39974	40	28	376	14.80	102	80	670	85.5	839	188.5
515-400-7-490	406.4	490	18132	178	39974	40	28	430	16.93	130			87.8	861	193.6
514-400-8-490	406.4	490	25524	250	56269	50	35	461	18.15	110	90	718	114.1	1119	251.6
515-400-8-490	406.4	490	25524	250	56269	50	35	450	17.72	180			127.4	1250	280.9
514-400-9-490	406.4	490	55135	541	121552	70	49	573	22.56	148	130	794	314.9	3088	694.3
514-400-10-490	406.4	490	70330	690	155050	80	55	630	24.80	166	150	828	395.0	3873	870.7
514-400-11-490	406.4	490	90785	890	200144	90	60	710	27.95	194	170	896	575.2	5641	1268.1

CLAMPS FOR RIGID STRUTS AND SNUBBERS N.B. 16" / 400mm

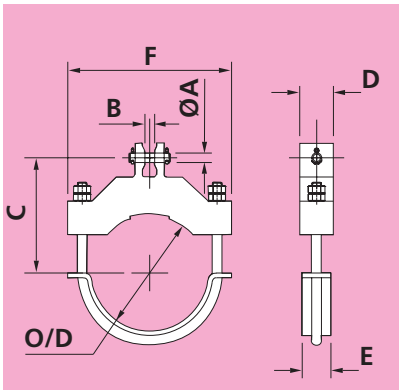

Type 513 Clamp

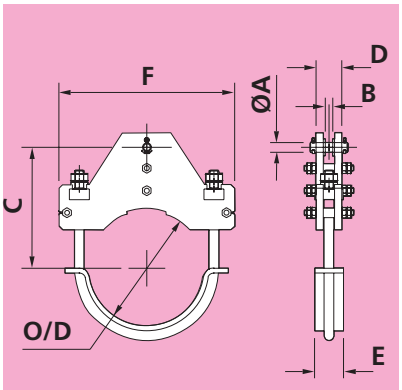

Type 514 Clamp

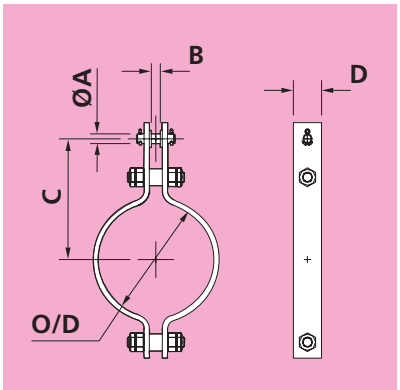

Type 515 Clamp

Fig. No.	Pipe O/D	Max. Pipe Temp	Max. Load			Dia. A	B	C		D	E	F	Clamp Weight		
	mm	°C	kgf	kN	lbs	mm	mm	mm	in	mm	mm	mm	kgf	N	lbs
513-400-1-530	406.4	530	423	4.15	933	10	9	304	11.97	20	30	461	11.4	112	25.2
514-400-1-530	406.4	530	423	4.15	933	10	9	303	11.93	36	30	502	9.8	96	21.5
515-400-1-530	406.4	530	423	4.15	933	10	9	300	11.81	50			6.2	61	13.7
513-400-2-530	406.4	530	985	9.66	2172	10	9	304	11.97	25	30	472	15.5	152	34.2
514-400-2-530	406.4	530	985	9.66	2172	10	9	303	11.93	39	30	516	7.5	74	16.6
515-400-2-530	406.4	530	985	9.66	2172	10	9	300	11.81	80			15.2	149	33.4
513-400-3-530	406.4	530	2125	20.8	4684	15	12	311	12.24	40	50	500	27.5	270	60.6
514-400-3-530	406.4	530	2125	20.8	4684	15	12	310	12.20	47	50	562	15.8	154	34.7
515-400-3-530	406.4	530	2125	20.8	4684	15	12	320	12.60	100			26.5	260	58.5
513-400-4-530	406.4	530	4293	42.1	9465	20	16	328	12.91	50	50	518	38.3	376	84.4
514-400-4-530	406.4	530	4293	42.1	9465	20	16	321	12.64	57	50	586	24.8	244	54.8
515-400-4-530	406.4	530	4293	42.1	9465	20	16	350	13.78	90			31.8	312	70.2
513-400-5-530	406.4	530	6324	62	13942	25	20	342	13.46	60	70	539	50.4	494	111.2
514-400-5-530	406.4	530	6324	62	13942	25	20	345	13.58	69	70	618	32.5	319	71.7
515-400-5-530	406.4	530	6324	62	13942	25	20	375	14.76	100			45.0	442	99.3
514-400-6-530	406.4	530	12754	125	28117	35	25	374	14.72	86	80	654	63.2	620	139.3
515-400-6-530	406.4	530	12754	125	28117	35	25	410	16.14	120			77.3	758	170.4
514-400-7-530	406.4	530	18132	178	39974	40	28	412	16.22	102	90	676	90.1	884	198.7
515-400-7-530	406.4	530	18132	178	39974	40	28	430	16.93	150			100.8	989	222.3
514-400-8-530	406.4	530	25524	250	56269	50	35	431	16.97	120	100	730	129.8	1273	286.3
515-400-8-530	406.4	530	25524	250	56269	50	35	450	17.72	210			147.8	1449	325.8
514-400-9-530	406.4	530	55135	541	121552	70	49	579	22.80	148	130	794	317.2	3111	699.3
514-400-10-530	406.4	530	70330	690	155050	80	55	632	24.88	166	150	828	395.0	3873	870.8
514-400-11-530	406.4	530	90785	890	200144	90	60	710	27.95	194	170	896	575.2	5641	1268.1
513-400-1-570	406.4	570	423	4.15	933	10	9	304	11.97	25	30	472	14.8	145	32.7
514-400-1-570	406.4	570	423	4.15	933	10	9	303	11.93	36	30	508	10.6	104	23.3
515-400-1-570	406.4	570	423	4.15	933	10	9	300	11.81	70			10.4	102	23.0
513-400-2-570	406.4	570	985	9.66	2172	10	9	304	11.97	30	40	486	19.8	194	43.6
514-400-2-570	406.4	570	985	9.66	2172	10	9	303	11.93	39	40	520	8.7	86	19.3
515-400-2-570	406.4	570	985	9.66	2172	10	9	300	11.81	80			15.2	149	33.4
513-400-3-570	406.4	570	2125	20.8	4684	15	12	311	12.24	50	50	518	35.8	351	78.9
514-400-3-570	406.4	570	2125	20.8	4684	15	12	316	12.44	51	50	570	17.5	172	38.7
515-400-3-570	406.4	570	2125	20.8	4684	15	12	320	12.60	100			26.5	260	58.5
513-400-4-570	406.4	570	4293	42.1	9465	20	16	330	12.99	60	70	539	48.9	480	107.9
514-400-4-570	406.4	570	4293	42.1	9465	20	16	342	13.46	63	70	592	29.6	291	65.3
515-400-4-570	406.4	570	4293	42.1	9465	20	16	360	14.17	100			43.0	422	94.8
513-400-5-570	406.4	570	6324	62	13942	25	20	344	13.54	70	80	564	63.6	623	140.2
514-400-5-570	406.4	570	6324	62	13942	25	20	369	14.53	79	80	628	62.5	613	137.8
515-400-5-570	406.4	570	6324	62	13942	25	20	375	14.76	130			58.2	571	128.4
514-400-6-570	406.4	570	12754	125	28117	35	25	410	16.14	86	90	660	76.9	754	169.5
515-400-6-570	406.4	570	12754	125	28117	35	25	410	16.14	130			83.6	820	184.3
514-400-7-570	406.4	570	18132	178	39974	40	28	412	16.22	102	100	688	116.6	1144	257.1
515-400-7-570	406.4	570	18132	178	39974	40	28	430	16.93	190			126.8	1244	279.6
514-400-8-570	406.4	570	25524	250	56269	50	35	453	17.83	120	120	738	158.4	1554	349.3
515-400-8-570	406.4	570	25524	250	56269	50	35	465	18.31	180			161.2	1581	355.3
514-400-9-570	406.4	570	55135	541	121552	70	49	603	23.74	148	130	794	331.4	3250	730.6
514-400-10-570	406.4	570	70330	690	155050	80	55	655	25.79	166	150	828	411.2	4032	906.5
514-400-11-570	406.4	570	90785	890	200144	90	60	666	26.22	214	170	896	610.9	5991	1346.9

CLAMPS FOR RIGID STRUTS AND SNUBBERS N.B. 18" / 450mm

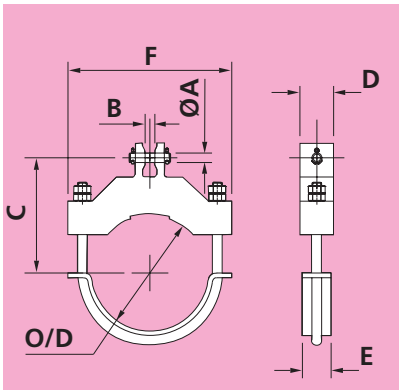

Type 513 Clamp

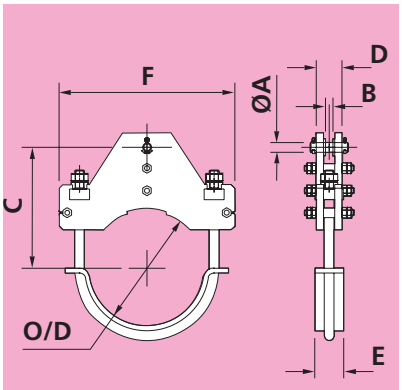

Type 514 Clamp

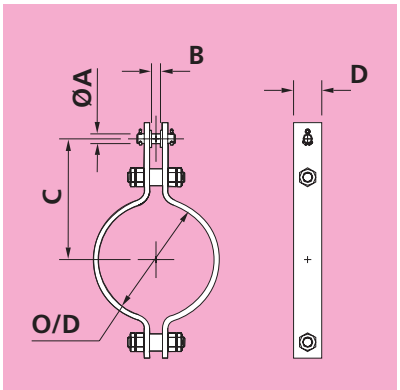

Type 515 Clamp

Fig. No.	Pipe O/D	Max. Pipe Temp	Max. Load			Dia. A	B	C		D	E	F	Clamp Weight		
	mm	°C	kgf	kN	lbs	mm	mm	mm	in	mm	mm	mm	kgf	N	lbs
513-450-1-400	457.2	400	423	4.15	933	10	9	330	12.99	20	20	506	12.9	127	28.5
514-450-1-400	457.2	400	423	4.15	933	10	9	329	12.95	36	20	552	7.5	74	16.6
515-450-1-400	457.2	400	423	4.15	933	10	9	325	12.80	50			6.8	67	15.1
513-450-2-400	457.2	400	985	9.66	2172	10	9	330	12.99	20	30	513	14.7	144	32.3
514-450-2-400	457.2	400	985	9.66	2172	10	9	329	12.95	39	30	562	6.6	64	14.5
515-450-2-400	457.2	400	985	9.66	2172	10	9	325	12.80	80			13.6	133	30.0
513-450-3-400	457.2	400	2125	20.8	4684	15	12	337	13.27	30	40	538	24.4	240	53.9
514-450-3-400	457.2	400	2125	20.8	4684	15	12	336	13.23	47	40	610	12.4	121	27.3
515-450-3-400	457.2	400	2125	20.8	4684	15	12	355	13.98	100			29.8	293	65.8
513-450-4-400	457.2	400	4293	42.1	9465	20	16	364	14.33	40	50	552	36.4	357	80.3
514-450-4-400	457.2	400	4293	42.1	9465	20	16	346	13.62	57	50	630	20.2	198	44.5
515-450-4-400	457.2	400	4293	42.1	9465	20	16	380	14.96	90			35.6	349	78.5
513-450-5-400	457.2	400	6324	62	13942	25	20	378	14.88	50	50	570	48.6	477	107.1
514-450-5-400	457.2	400	6324	62	13942	25	20	352	13.86	63	50	664	40.4	397	89.2
515-450-5-400	457.2	400	6324	62	13942	25	20	405	15.94	100			50.1	491	110.4
514-450-6-400	457.2	400	12754	125	28117	35	25	400	15.75	86	80	706	60.6	595	133.7
515-450-6-400	457.2	400	12754	125	28117	35	25	455	17.91	120			88.8	870	195.7
514-450-7-400	457.2	400	18132	178	39974	40	28	438	17.24	92	90	728	109.0	1069	240.3
515-450-7-400	457.2	400	18132	178	39974	40	28	485	19.09	160			124.8	1224	275.2
514-450-8-400	457.2	400	25524	250	56269	50	35	478	18.82	110	100	782	133.2	1306	293.6
515-450-8-400	457.2	400	25524	250	56269	50	35	500	19.69	220			178.5	1751	393.6
514-450-9-400	457.2	400	55135	541	121552	70	49	598	23.54	148	130	846	301.0	2951	663.5
514-450-10-400	457.2	400	70330	690	155050	80	55	656	25.83	166	150	880	426.6	4183	940.4
514-450-11-400	457.2	400	90785	890	200144	90	60	736	28.98	194	190	958	601.2	5895	1325.3
513-450-1-490	457.2	490	423	4.15	933	10	9	330	12.99	20	20	506	12.9	127	28.5
514-450-1-490	457.2	490	423	4.15	933	10	9	329	12.95	36	20	552	7.5	74	16.6
515-450-1-490	457.2	490	423	4.15	933	10	9	325	12.80	50			6.8	67	15.1
513-450-2-490	457.2	490	985	9.66	2172	10	9	330	12.99	20	30	513	14.6	143	32.1
514-450-2-490	457.2	490	985	9.66	2172	10	9	329	12.95	39	30	562	6.6	65	14.5
515-450-2-490	457.2	490	985	9.66	2172	10	9	325	12.80	70			11.7	115	25.8
513-450-3-490	457.2	490	2125	20.8	4684	15	12	337	13.27	30	40	538	24.4	240	53.9
514-450-3-490	457.2	490	2125	20.8	4684	15	12	336	13.23	47	40	610	12.4	121	27.3
515-450-3-490	457.2	490	2125	20.8	4684	15	12	335	13.19	100			21.5	211	47.5
513-450-4-490	457.2	490	4293	42.1	9465	20	16	363	14.29	40	50	552	36.2	355	79.7
514-450-4-490	457.2	490	4293	42.1	9465	20	16	346	13.62	57	50	630	19.4	190	42.8
515-450-4-490	457.2	490	4293	42.1	9465	20	16	375	14.76	90			34.6	339	76.3
513-450-5-490	457.2	490	6324	62	13942	25	20	376	14.80	50	50	570	48.3	473	106.4
514-450-5-490	457.2	490	6324	62	13942	25	20	352	13.86	63	50	664	40.5	397	89.2
515-450-5-490	457.2	490	6324	62	13942	25	20	390	15.35	120			48.0	471	105.8
514-450-6-490	457.2	490	12754	125	28117	35	25	376	14.80	86	70	696	70.9	695	156.3
515-450-6-490	457.2	490	12754	125	28117	35	25	440	17.32	120			83.9	823	184.9
514-450-7-490	457.2	490	18132	178	39974	40	28	429	16.89	92	80	722	99.9	979	220.2
515-450-7-490	457.2	490	18132	178	39974	40	28	460	18.11	140			102.0	1000	224.8
514-450-8-490	457.2	490	25524	250	56269	50	35	475	18.70	110	90	770	119.6	1173	263.7
515-450-8-490	457.2	490	25524	250	56269	50	35	480	18.90	200			151.8	1489	334.7
514-450-9-490	457.2	490	55135	541	121552	70	49	590	23.23	148	130	846	297.1	2913	655.0
514-450-10-490	457.2	490	70330	690	155050	80	55	648	25.51	166	150	880	423.3	4151	933.3
514-450-11-490	457.2	490	90785	890	200144	90	60	728	28.66	194	170	948	553.5	5428	1220.2

CLAMPS FOR RIGID STRUTS AND SNUBBERS N.B. 18" / 450mm

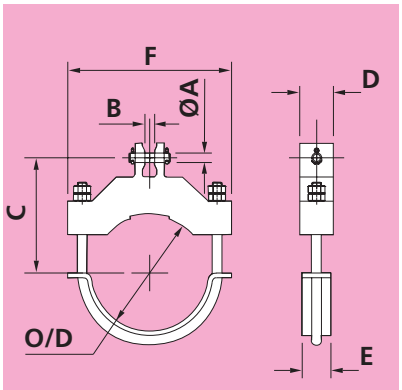

Type 513 Clamp

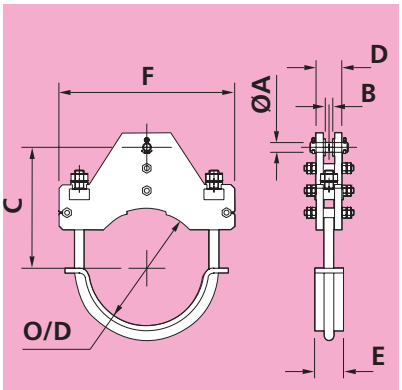

Type 514 Clamp

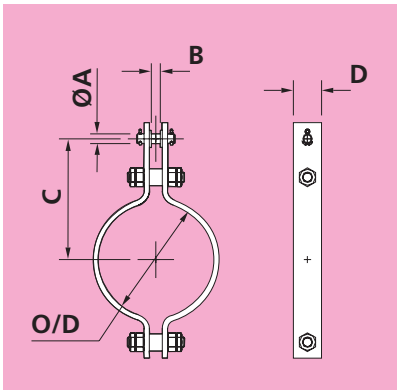

Type 515 Clamp

Fig. No.	Pipe O/D	Max. Pipe Temp	Max. Load			Dia. A	B	C		D	E	F	Clamp Weight		
	mm	°C	kgf	kN	lbs	mm	mm	mm	in	mm	mm	mm	kgf	N	lbs
513-450-1-530	457.2	530	423	4.15	933	10	9	330	12.99	20	30	513	13.8	135	30.4
514-450-1-530	457.2	530	423	4.15	933	10	9	329	12.95	36	30	554	8.3	81	18.2
515-450-1-530	457.2	530	423	4.15	933	10	9	325	12.80	50			6.8	67	15.1
513-450-2-530	457.2	530	985	9.66	2172	10	9	330	12.99	25	30	524	18.5	182	40.9
514-450-2-530	457.2	530	985	9.66	2172	10	9	329	12.95	39	30	568	7.4	72	16.3
515-450-2-530	457.2	530	985	9.66	2172	10	9	325	12.80	80			16.6	163	36.7
513-450-3-530	457.2	530	2125	20.8	4684	15	12	337	13.27	40	50	552	32.6	320	71.9
514-450-3-530	457.2	530	2125	20.8	4684	15	12	336	13.23	47	50	614	20.5	201	45.2
515-450-3-530	457.2	530	2125	20.8	4684	15	12	345	13.58	100			29.0	285	64.0
513-450-4-530	457.2	530	4293	42.1	9465	20	16	358	14.09	50	50	570	45.3	445	99.9
514-450-4-530	457.2	530	4293	42.1	9465	20	16	347	13.66	57	50	638	30.9	303	68.1
515-450-4-530	457.2	530	4293	42.1	9465	20	16	375	14.76	90			34.6	339	76.3
513-450-5-530	457.2	530	6324	62	13942	25	20	372	14.65	60	70	591	60.0	588	132.3
514-450-5-530	457.2	530	6324	62	13942	25	20	371	14.61	69	70	670	36.0	353	79.4
515-450-5-530	457.2	530	6324	62	13942	25	20	400	15.75	100			48.7	478	107.4
514-450-6-530	457.2	530	12754	125	28117	35	25	400	15.75	86	80	706	68.4	671	150.8
515-450-6-530	457.2	530	12754	125	28117	35	25	440	17.32	120			83.9	823	184.9
514-450-7-530	457.2	530	18132	178	39974	40	28	438	17.24	92	90	728	113.9	1117	251.1
515-450-7-530	457.2	530	18132	178	39974	40	28	460	18.11	160			116.1	1138	255.9
514-450-8-530	457.2	530	25524	250	56269	50	35	479	18.86	110	100	782	133.9	1313	295.2
515-450-8-530	457.2	530	25524	250	56269	50	35	495	19.49	180			173.4	1700	382.2
514-450-9-530	457.2	530	55135	541	121552	70	49	594	23.39	148	130	846	298.8	2931	658.8
514-450-10-530	457.2	530	70330	690	155050	80	55	649	25.55	166	150	880	423.9	4157	934.6
514-450-11-530	457.2	530	90785	890	200144	90	60	728	28.66	194	170	948	553.5	5428	1220.2
513-450-1-570	457.2	570	423	4.15	933	10	9	330	12.99	25	30	524	17.7	173	39.0
514-450-1-570	457.2	570	423	4.15	933	10	9	329	12.95	36	30	560	8.0	79	17.7
515-450-1-570	457.2	570	423	4.15	933	10	9	325	12.80	70			11.5	112	25.3
513-450-2-570	457.2	570	985	9.66	2172	10	9	330	12.99	30	40	538	23.5	231	51.9
514-450-2-570	457.2	570	985	9.66	2172	10	9	329	12.95	39	40	572	12.2	120	27.0
515-450-2-570	457.2	570	985	9.66	2172	10	9	325	12.80	100			20.8	204	45.8
513-450-3-570	457.2	570	2125	20.8	4684	15	12	337	13.27	50	50	570	42.3	414	93.2
514-450-3-570	457.2	570	2125	20.8	4684	15	12	342	13.46	51	50	622	22.4	220	49.4
515-450-3-570	457.2	570	2125	20.8	4684	15	12	345	13.58	100			29.0	285	64.0
513-450-4-570	457.2	570	4293	42.1	9465	20	16	359	14.13	60	70	591	58.2	571	128.3
514-450-4-570	457.2	570	4293	42.1	9465	20	16	368	14.49	63	70	644	32.5	318	71.6
515-450-4-570	457.2	570	4293	42.1	9465	20	16	385	15.16	100			46.6	457	102.8
513-450-5-570	457.2	570	6324	62	13942	25	20	374	14.72	70	80	616	74.8	734	164.9
514-450-5-570	457.2	570	6324	62	13942	25	20	395	15.55	79	80	680	62.5	613	137.7
515-450-5-570	457.2	570	6324	62	13942	25	20	400	15.75	140			67.8	665	149.4
514-450-6-570	457.2	570	12754	125	28117	35	25	436	17.17	86	90	712	81.2	797	179.1
515-450-6-570	457.2	570	12754	125	28117	35	25	440	17.32	150			104.3	1023	230.0
514-450-7-570	457.2	570	18132	178	39974	40	28	438	17.24	102	100	740	128.0	1255	282.2
515-450-7-570	457.2	570	18132	178	39974	40	28	460	18.11	210			151.3	1484	333.6
514-450-8-570	457.2	570	25524	250	56269	50	35	479	18.86	120	120	790	164.7	1615	363.1
515-450-8-570	457.2	570	25524	250	56269	50	35	495	19.49	180			173.4	1700	382.2
514-450-9-570	457.2	570	55135	541	121552	70	49	620	24.41	148	130	846	313.9	3079	692.1
514-450-10-570	457.2	570	70330	690	155050	80	55	674	26.54	166	150	880	441.1	4326	972.4
514-450-11-570	457.2	570	90785	890	200144	90	60	682	26.85	214	170	948	578.7	5675	1275.7

CLAMPS FOR RIGID STRUTS AND SNUBBERS N.B. 20" / 500mm

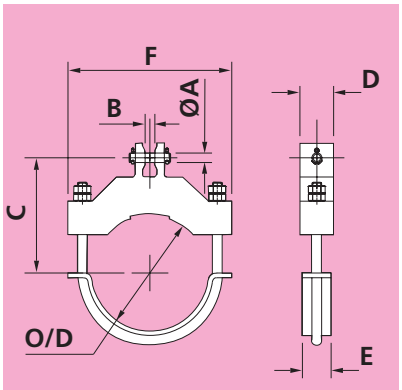

Type 513 Clamp

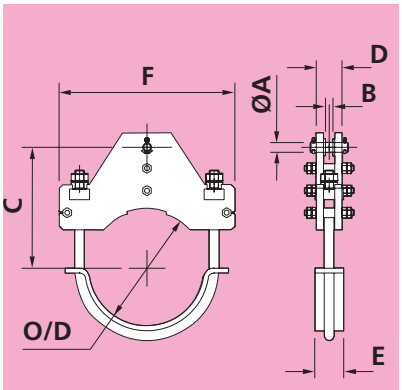

Type 514 Clamp

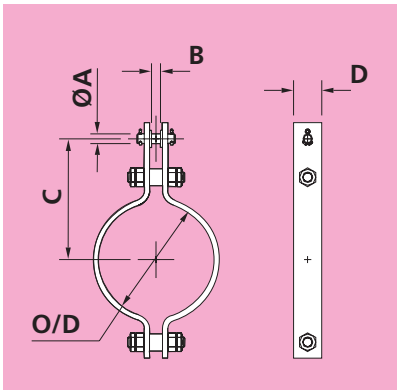

Type 515 Clamp

Fig. No.	Pipe O/D	Max. Pipe Temp	Max. Load			Dia. A	B	C		D	E	F	Clamp Weight		
	mm	°C	kgf	kN	lbs	mm	mm	mm	in	mm	mm	mm	kgf	N	lbs
513-500-1-400	508	400	423	4.15	933	10	9	356	14.02	25	20	558	18.4	181	40.6
514-500-1-400	508	400	423	4.15	933	10	9	356	14.02	40	20	604	7.5	73	16.4
515-500-1-400	508	400	423	4.15	933	10	9	355	13.98	50			7.5	74	16.6
513-500-2-400	508	400	985	9.66	2172	10	9	356	14.02	25	30	565	20.6	202	45.5
514-500-2-400	508	400	985	9.66	2172	10	9	356	14.02	43	30	614	7.3	71	16.0
515-500-2-400	508	400	985	9.66	2172	10	9	355	13.98	80			14.9	146	32.8
513-500-3-400	508	400	2125	20.8	4684	15	12	369	14.53	30	40	590	28.9	284	63.8
514-500-3-400	508	400	2125	20.8	4684	15	12	362	14.25	51	40	662	15.5	152	34.2
515-500-3-400	508	400	2125	20.8	4684	15	12	380	14.96	100			32.3	317	71.2
513-500-4-400	508	400	4293	42.1	9465	20	16	397	15.63	40	50	604	42.8	420	94.4
514-500-4-400	508	400	4293	42.1	9465	20	16	373	14.69	57	50	682	28.5	280	62.9
515-500-4-400	508	400	4293	42.1	9465	20	16	410	16.14	90			38.7	380	85.4
513-500-5-400	508	400	6324	62	13942	25	20	411	16.18	50	50	622	57.3	562	126.4
514-500-5-400	508	400	6324	62	13942	25	20	378	14.88	63	50	716	39.4	386	86.8
515-500-5-400	508	400	6324	62	13942	25	20	435	17.13	100			54.2	532	119.6
514-500-6-400	508	400	12754	125	28117	35	25	428	16.85	86	80	758	64.1	629	141.4
515-500-6-400	508	400	12754	125	28117	35	25	485	19.09	120			95.3	935	210.1
514-500-7-400	508	400	18132	178	39974	40	28	466	18.35	92	90	780	115.0	1128	253.5
515-500-7-400	508	400	18132	178	39974	40	28	510	20.08	170			140.5	1378	309.7
514-500-8-400	508	400	25524	250	56269	50	35	494	19.45	110	100	834	156.7	1537	345.4
515-500-8-400	508	400	25524	250	56269	50	35	545	21.46	180			197.8	1940	436.1
514-500-9-400	508	400	55135	541	121552	70	49	613	24.13	148	130	898	348.1	3414	767.4
514-500-10-400	508	400	70330	690	155050	80	55	672	26.46	166	150	932	423.2	4151	933.1
514-500-11-400	508	400	90785	890	200144	90	60	752	29.61	194	190	1010	699.5	6860	1542.1
513-500-1-490	508	490	423	4.15	933	10	9	356	14.02	25	20	558	18.4	181	40.6
514-500-1-490	508	490	423	4.15	933	10	9	356	14.02	40	20	604	7.5	73	16.5
515-500-1-490	508	490	423	4.15	933	10	9	355	13.98	50			7.5	74	16.6
513-500-2-490	508	490	985	9.66	2172	10	9	356	14.02	25	30	565	20.6	202	45.5
514-500-2-490	508	490	985	9.66	2172	10	9	356	14.02	43	30	614	7.3	71	16.0
515-500-2-490	508	490	985	9.66	2172	10	9	355	13.98	80			14.6	143	32.2
513-500-3-490	508	490	2125	20.8	4684	15	12	368	14.49	30	40	590	28.9	283	63.7
514-500-3-490	508	490	2125	20.8	4684	15	12	362	14.25	51	40	662	15.5	152	34.3
515-500-3-490	508	490	2125	20.8	4684	15	12	370	14.57	100			31.5	309	69.5
513-500-4-490	508	490	4293	42.1	9465	20	16	395	15.55	40	50	604	42.5	417	93.6
514-500-4-490	508	490	4293	42.1	9465	20	16	373	14.69	57	50	682	28.5	280	62.9
515-500-4-490	508	490	4293	42.1	9465	20	16	400	15.75	90			37.4	366	82.4
513-500-5-490	508	490	6324	62	13942	25	20	409	16.10	50	50	622	56.9	558	125.4
514-500-5-490	508	490	6324	62	13942	25	20	378	14.88	63	50	716	38.3	375	84.4
515-500-5-490	508	490	6324	62	13942	25	20	430	16.93	100			52.9	518	116.5
514-500-6-490	508	490	12754	125	28117	35	25	404	15.91	86	70	748	71.5	701	157.5
515-500-6-490	508	490	12754	125	28117	35	25	480	18.90	120			93.0	912	205.0
514-500-7-490	508	490	18132	178	39974	40	28	444	17.48	92	80	774	104.5	1025	230.3
515-500-7-490	508	490	18132	178	39974	40	28	485	19.09	150			116.3	1140	256.4
514-500-8-490	508	490	25524	250	56269	50	35	490	19.29	110	90	822	144.5	1417	318.5
515-500-8-490	508	490	25524	250	56269	50	35	505	19.88	220			177.1	1737	390.4
514-500-9-490	508	490	55135	541	121552	70	49	605	23.82	148	130	898	341.9	3353	753.7
514-500-10-490	508	490	70330	690	155050	80	55	663	26.10	166	150	932	417.9	4098	921.3
514-500-11-490	508	490	90785	890	200144	90	60	745	29.33	194	170	1000	639.3	6269	1409.3

CLAMPS FOR RIGID STRUTS AND SNUBBERS N.B. 20" / 500mm

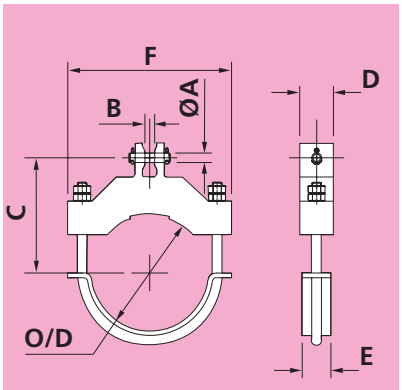

Type 513 Clamp

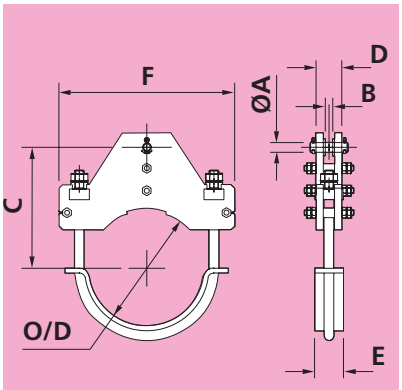

Type 514 Clamp

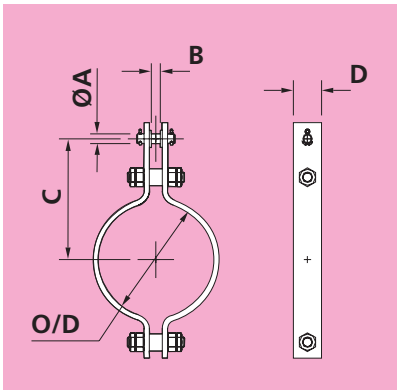

Type 515 Clamp

Fig. No.	Pipe O/D	Max. Pipe Temp	Max. Load			Dia. A	B	C		D	E	F	Clamp Weight		
	mm	°C	kgf	kN	lbs	mm	mm	mm	in	mm	mm	mm	kgf	N	lbs
513-500-1-530	508	530	423	4.15	933	10	9	356	14.02	25	30	565	19.4	191	42.9
514-500-1-530	508	530	423	4.15	933	10	9	356	14.02	40	30	606	8.3	81	18.2
515-500-1-530	508	530	423	4.15	933	10	9	355	13.98	60			9.0	88	19.8
513-500-2-530	508	530	985	9.66	2172	10	9	356	14.02	25	30	576	21.7	213	47.9
514-500-2-530	508	530	985	9.66	2172	10	9	356	14.02	43	30	620	8.9	87	19.6
515-500-2-530	508	530	985	9.66	2172	10	9	355	13.98	80			18.3	180	40.4
513-500-3-530	508	530	2125	20.8	4684	15	12	363	14.29	40	50	604	38.1	374	84.1
514-500-3-530	508	530	2125	20.8	4684	15	12	362	14.25	51	50	666	25.1	246	55.2
515-500-3-530	508	530	2125	20.8	4684	15	12	370	14.57	100			31.5	309	69.5
513-500-4-530	508	530	4293	42.1	9465	20	16	390	15.35	50	50	622	53.2	522	117.3
514-500-4-530	508	530	4293	42.1	9465	20	16	372	14.65	57	50	690	36.2	355	79.8
515-500-4-530	508	530	4293	42.1	9465	20	16	400	15.75	100			41.4	406	91.4
513-500-5-530	508	530	6324	62	13942	25	20	405	15.94	60	70	643	70.6	692	155.5
514-500-5-530	508	530	6324	62	13942	25	20	399	15.71	69	70	722	38.9	381	85.7
515-500-5-530	508	530	6324	62	13942	25	20	430	16.93	110			58.0	569	128.0
514-500-6-530	508	530	12754	125	28117	35	25	428	16.85	86	80	758	69.3	680	152.8
515-500-6-530	508	530	12754	125	28117	35	25	465	18.31	120			89.7	880	197.7
514-500-7-530	508	530	18132	178	39974	40	28	466	18.35	92	90	780	121.7	1193	268.3
515-500-7-530	508	530	18132	178	39974	40	28	485	19.09	170			131.4	1288	289.6
514-500-8-530	508	530	25524	250	56269	50	35	494	19.45	110	100	834	157.1	1541	346.4
515-500-8-530	508	530	25524	250	56269	50	35	525	20.67	180			185.5	1819	409.0
514-500-9-530	508	530	55135	541	121552	70	49	610	24.02	148	130	898	345.0	3383	760.5
514-500-10-530	508	530	70330	690	155050	80	55	665	26.18	166	150	932	417.3	4092	919.9
514-500-11-530	508	530	90785	890	200144	90	60	745	29.33	194	170	1000	639.3	6269	1409.3
513-500-1-570	508	570	423	4.15	933	10	9	356	14.02	25	30	576	20.8	204	45.9
514-500-1-570	508	570	423	4.15	933	10	9	356	14.02	40	30	612	9.0	88	19.7
515-500-1-570	508	570	423	4.15	933	10	9	355	13.98	70			12.6	123	27.7
513-500-2-570	508	570	985	9.66	2172	10	9	356	14.02	30	40	590	27.5	270	60.6
514-500-2-570	508	570	985	9.66	2172	10	9	356	14.02	43	40	624	15.3	150	33.7
515-500-2-570	508	570	985	9.66	2172	10	9	355	13.98	100			22.9	224	50.4
513-500-3-570	508	570	2125	20.8	4684	15	12	364	14.33	50	50	622	49.1	481	108.2
514-500-3-570	508	570	2125	20.8	4684	15	12	370	14.57	51	50	674	35.6	350	78.6
515-500-3-570	508	570	2125	20.8	4684	15	12	370	14.57	110			34.6	340	76.4
513-500-4-570	508	570	4293	42.1	9465	20	16	390	15.35	60	70	643	67.5	662	148.9
514-500-4-570	508	570	4293	42.1	9465	20	16	396	15.59	63	70	696	35.6	349	78.5
515-500-4-570	508	570	4293	42.1	9465	20	16	410	16.14	100			50.3	494	111.0
513-500-5-570	508	570	6324	62	13942	25	20	406	15.98	70	80	668	87.2	855	192.2
514-500-5-570	508	570	6324	62	13942	25	20	423	16.65	79	80	732	64.9	636	143.0
515-500-5-570	508	570	6324	62	13942	25	20	430	16.93	150			78.8	773	173.7
514-500-6-570	508	570	12754	125	28117	35	25	464	18.27	86	90	764	85.0	833	187.4
515-500-6-570	508	570	12754	125	28117	35	25	465	18.31	150			111.6	1094	246.0
514-500-7-570	508	570	18132	178	39974	40	28	466	18.35	102	100	792	129.4	1268	285.2
515-500-7-570	508	570	18132	178	39974	40	28	485	19.09	220			169.0	1658	372.6
514-500-8-570	508	570	25524	250	56269	50	35	516	20.31	110	120	842	187.8	1842	414.1
515-500-8-570	508	570	25524	250	56269	50	35	525	20.67	190			195.5	1917	431.1
514-500-9-570	508	570	55135	541	121552	70	49	636	25.04	148	130	898	360.9	3539	795.6
514-500-10-570	508	570	70330	690	155050	80	55	688	27.09	166	150	932	436.0	4275	961.1
514-500-11-570	508	570	90785	890	200144	90	60	757	29.80	194	170	1000	651.1	6385	1435.3

CLAMPS FOR RIGID STRUTS AND SNUBBERS N.B. 22" / 550mm

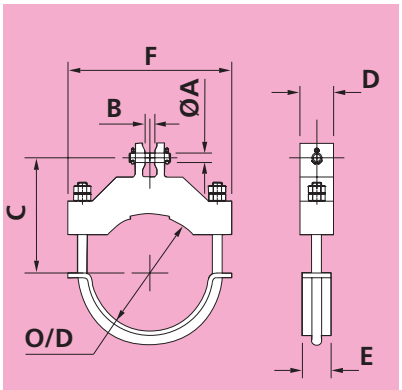

Type 513 Clamp

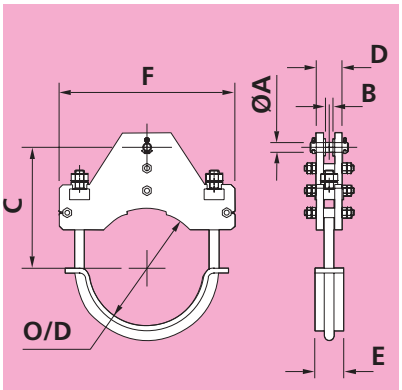

Type 514 Clamp

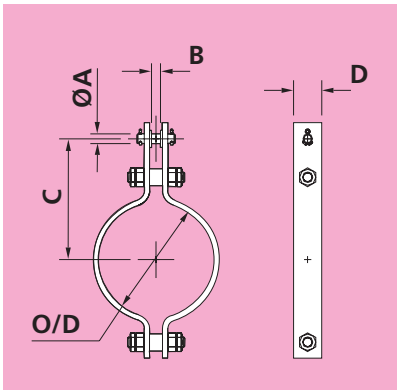

Type 515 Clamp

Fig. No.	Pipe O/D	Max. Pipe Temp	Max. Load			Dia. A	B	C		D	E	F	Clamp Weight		
	mm	°C	kgf	kN	lbs	mm	mm	mm	in	mm	mm	mm	kgf	N	lbs
513-550-1-400	558.8	400	423	4.15	933	10	9	381	15.00	25	20	608	21.7	213	47.8
514-550-1-400	558.8	400	423	4.15	933	10	9	381	15.00	40	20	654	6.3	62	14.0
515-550-1-400	558.8	400	423	4.15	933	10	9	380	14.96	50			8.3	81	18.2
513-550-2-400	558.8	400	985	9.66	2172	10	9	381	15.00	25	30	615	24.0	236	53.0
514-550-2-400	558.8	400	985	9.66	2172	10	9	381	15.00	43	30	664	8.2	81	18.1
515-550-2-400	558.8	400	985	9.66	2172	10	9	380	14.96	80			20.0	196	44.1
513-550-3-400	558.8	400	2125	20.8	4684	15	12	398	15.67	30	40	640	33.7	331	74.4
514-550-3-400	558.8	400	2125	20.8	4684	15	12	387	15.24	51	40	712	22.1	216	48.6
515-550-3-400	558.8	400	2125	20.8	4684	15	12	405	15.94	100			34.7	341	76.6
513-550-4-400	558.8	400	4293	42.1	9465	20	16	426	16.77	40	50	654	49.6	486	109.2
514-550-4-400	558.8	400	4293	42.1	9465	20	16	398	15.67	57	50	732	34.8	341	76.7
515-550-4-400	558.8	400	4293	42.1	9465	20	16	435	17.13	100			46.0	451	101.4
513-550-5-400	558.8	400	6324	62	13942	25	20	441	17.36	50	50	672	66.2	649	145.8
514-550-5-400	558.8	400	6324	62	13942	25	20	403	15.87	63	50	766	42.4	416	93.6
515-550-5-400	558.8	400	6324	62	13942	25	20	460	18.11	100			57.9	568	127.6
514-550-6-400	558.8	400	12754	125	28117	35	25	453	17.83	86	80	808	69.6	682	153.3
515-550-6-400	558.8	400	12754	125	28117	35	25	510	20.08	120			101.1	992	222.9
514-550-7-400	558.8	400	18132	178	39974	40	28	491	19.33	92	90	830	124.3	1219	274.1
515-550-7-400	558.8	400	18132	178	39974	40	28	535	21.06	180			157.0	1540	346.1
514-550-8-400	558.8	400	25524	250	56269	50	35	508	20.00	110	100	884	185.5	1819	409.0
515-550-8-400	558.8	400	25524	250	56269	50	35	570	22.44	180			208.4	2044	459.5
514-550-9-400	558.8	400	55135	541	121552	70	49	628	24.72	148	130	948	352.6	3458	777.3
514-550-10-400	558.8	400	70330	690	155050	80	55	688	27.09	166	150	982	492.2	4827	1085.2
514-550-11-400	558.8	400	90785	890	200144	90	60	768	30.24	194	190	1060	654.0	6413	1441.8
513-550-1-490	558.8	490	423	4.15	933	10	9	381	15.00	25	20	608	21.7	213	47.8
514-550-1-490	558.8	490	423	4.15	933	10	9	381	15.00	40	20	654	6.3	62	14.0
515-550-1-490	558.8	490	423	4.15	933	10	9	380	14.96	50			8.1	80	17.9
513-550-2-490	558.8	490	985	9.66	2172	10	9	381	15.00	25	30	615	24.0	236	53.0
514-550-2-490	558.8	490	985	9.66	2172	10	9	381	15.00	43	30	664	8.2	81	18.1
515-550-2-490	558.8	490	985	9.66	2172	10	9	380	14.96	80			15.8	155	34.8
513-550-3-490	558.8	490	2125	20.8	4684	15	12	397	15.63	30	40	640	33.5	329	73.9
514-550-3-490	558.8	490	2125	20.8	4684	15	12	387	15.24	51	40	712	22.1	217	48.7
515-550-3-490	558.8	490	2125	20.8	4684	15	12	400	15.75	100			34.2	336	75.5
513-550-4-490	558.8	490	4293	42.1	9465	20	16	424	16.69	40	50	654	49.1	482	108.3
514-550-4-490	558.8	490	4293	42.1	9465	20	16	398	15.67	57	50	732	34.8	341	76.7
515-550-4-490	558.8	490	4293	42.1	9465	20	16	425	16.73	90			40.1	393	88.4
513-550-5-490	558.8	490	6324	62	13942	25	20	439	17.28	50	50	672	65.6	643	144.6
514-550-5-490	558.8	490	6324	62	13942	25	20	403	15.87	63	50	766	41.2	404	90.9
515-550-5-490	558.8	490	6324	62	13942	25	20	455	17.91	100			56.5	554	124.5
514-550-6-490	558.8	490	12754	125	28117	35	25	434	17.09	76	70	798	54.9	538	121.0
515-550-6-490	558.8	490	12754	125	28117	35	25	505	19.88	120			98.8	969	217.8
514-550-7-490	558.8	490	18132	178	39974	40	28	455	17.91	92	80	824	89.8	881	198.1
515-550-7-490	558.8	490	18132	178	39974	40	28	515	20.28	170			140.6	1378	309.9
514-550-8-490	558.8	490	25524	250	56269	50	35	505	19.88	110	90	872	170.7	1674	376.4
515-550-8-490	558.8	490	25524	250	56269	50	35	550	21.65	180			196.1	1923	432.4
514-550-9-490	558.8	490	55135	541	121552	70	49	619	24.37	148	130	948	345.3	3387	761.3
514-550-10-490	558.8	490	70330	690	155050	80	55	679	26.73	166	150	982	486.6	4772	1072.7
514-550-11-490	558.8	490	90785	890	200144	90	60	761	29.96	194	170	1050	628.4	6163	1385.4

CLAMPS FOR RIGID STRUTS AND SNUBBERS N.B. 22" / 550mm

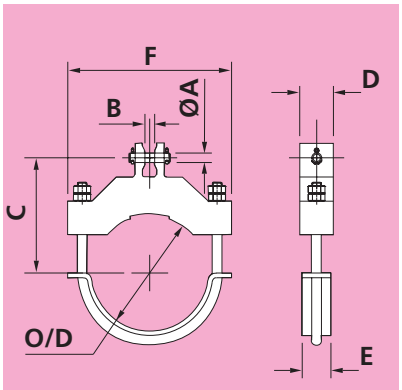

Type 513 Clamp

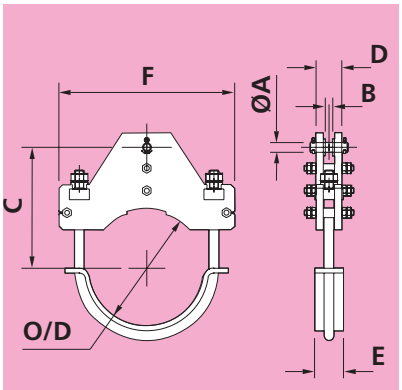

Type 514 Clamp

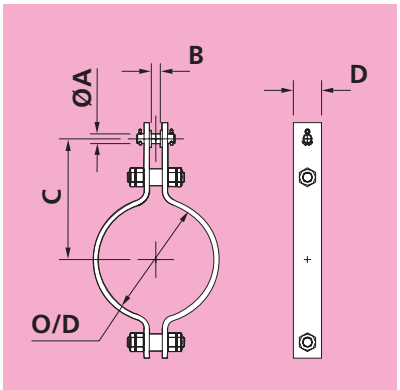

Type 515 Clamp

Fig. No.	Pipe O/D	Max. Pipe Temp	Max. Load			Dia. A	B	C		D	E	F	Clamp Weight		
	mm	°C	kgf	kN	lbs	mm	mm	mm	in	mm	mm	mm	kgf	N	lbs
513-550-1-530	558.8	530	423	4.15	933	10	9	381	15.00	25	30	615	22.7	223	50.2
514-550-1-530	558.8	530	423	4.15	933	10	9	381	15.00	40	30	656	7.2	71	15.9
515-550-1-530	558.8	530	423	4.15	933	10	9	380	14.96	60			9.7	95	21.5
513-550-2-530	558.8	530	985	9.66	2172	10	9	381	15.00	25	30	626	25.2	247	55.6
514-550-2-530	558.8	530	985	9.66	2172	10	9	381	15.00	43	30	670	12.0	118	26.5
515-550-2-530	558.8	530	985	9.66	2172	10	9	380	14.96	80			19.8	194	43.6
513-550-3-530	558.8	530	2125	20.8	4684	15	12	390	15.35	40	50	654	44.1	432	97.1
514-550-3-530	558.8	530	2125	20.8	4684	15	12	387	15.24	51	50	716	33.4	328	73.7
515-550-3-530	558.8	530	2125	20.8	4684	15	12	400	15.75	100			34.2	336	75.5
513-550-4-530	558.8	530	4293	42.1	9465	20	16	418	16.46	50	50	672	61.2	600	134.8
514-550-4-530	558.8	530	4293	42.1	9465	20	16	397	15.63	57	50	740	39.2	384	86.4
515-550-4-530	558.8	530	4293	42.1	9465	20	16	425	16.73	110			48.9	480	107.8
513-550-5-530	558.8	530	6324	62	13942	25	20	433	17.05	60	70	693	80.6	790	177.6
514-550-5-530	558.8	530	6324	62	13942	25	20	424	16.69	69	70	772	45.6	447	100.5
515-550-5-530	558.8	530	6324	62	13942	25	20	455	17.91	120			67.6	663	149.0
514-550-6-530	558.8	530	12754	125	28117	35	25	453	17.83	86	80	808	79.7	782	175.7
515-550-6-530	558.8	530	12754	125	28117	35	25	495	19.49	130			104.1	1021	229.5
514-550-7-530	558.8	530	18132	178	39974	40	28	491	19.33	92	90	830	131.6	1291	290.1
515-550-7-530	558.8	530	18132	178	39974	40	28	515	20.28	190			156.7	1537	345.5
514-550-8-530	558.8	530	25524	250	56269	50	35	508	20.00	110	100	884	185.9	1823	409.9
515-550-8-530	558.8	530	25524	250	56269	50	35	550	21.65	180			196.1	1923	432.4
514-550-9-530	558.8	530	55135	541	121552	70	49	624	24.57	148	130	948	348.6	3418	768.5
514-550-10-530	558.8	530	70330	690	155050	80	55	679	26.73	166	150	982	484.8	4755	1068.9
514-550-11-530	558.8	530	90785	890	200144	90	60	761	29.96	194	170	1050	628.4	6163	1385.4
513-550-1-570	558.8	570	423	4.15	933	10	9	381	15.00	25	30	626	24.2	238	53.4
514-550-1-570	558.8	570	423	4.15	933	10	9	381	15.00	40	30	662	8.4	83	18.6
515-550-1-570	558.8	570	423	4.15	933	10	9	380	14.96	70			13.6	134	30.0
513-550-2-570	558.8	570	985	9.66	2172	10	9	381	15.00	30	40	640	31.7	311	70.0
514-550-2-570	558.8	570	985	9.66	2172	10	9	381	15.00	43	40	674	21.3	209	47.1
515-550-2-570	558.8	570	985	9.66	2172	10	9	380	14.96	100			24.7	242	54.5
513-550-3-570	558.8	570	2125	20.8	4684	15	12	391	15.39	50	50	672	56.6	555	124.8
514-550-3-570	558.8	570	2125	20.8	4684	15	12	395	15.55	51	50	724	43.7	428	96.2
515-550-3-570	558.8	570	2125	20.8	4684	15	12	410	16.14	90			39.0	382	85.9
513-550-4-570	558.8	570	4293	42.1	9465	20	16	418	16.46	60	70	693	77.3	758	170.5
514-550-4-570	558.8	570	4293	42.1	9465	20	16	421	16.57	63	70	746	41.2	404	90.9
515-550-4-570	558.8	570	4293	42.1	9465	20	16	440	17.32	100			54.4	534	120.0
513-550-5-570	558.8	570	6324	62	13942	25	20	434	17.09	70	80	718	99.8	979	220.0
514-550-5-570	558.8	570	6324	62	13942	25	20	448	17.64	79	80	782	62.2	610	137.0
515-550-5-570	558.8	570	6324	62	13942	25	20	455	17.91	160			89.8	880	197.9
514-550-6-570	558.8	570	12754	125	28117	35	25	489	19.25	86	90	814	88.8	870	195.7
515-550-6-570	558.8	570	12754	125	28117	35	25	495	19.49	170			135.5	1329	298.7
514-550-7-570	558.8	570	18132	178	39974	40	28	491	19.33	92	100	842	129.9	1274	286.4
515-550-7-570	558.8	570	18132	178	39974	40	28	530	20.87	180			187.9	1843	414.3
514-550-8-570	558.8	570	25524	250	56269	50	35	532	20.94	110	120	892	216.5	2123	477.3
515-550-8-570	558.8	570	25524	250	56269	50	35	550	21.65	200			217.3	2131	479.1
514-550-9-570	558.8	570	55135	541	121552	70	49	649	25.55	148	130	948	364.7	3577	804.1
514-550-10-570	558.8	570	70330	690	155050	80	55	703	27.68	166	150	982	503.1	4934	1109.1
514-550-11-570	558.8	570	90785	890	200144	90	60	772	30.39	194	170	1050	635.0	6228	1400.0

CLAMPS FOR RIGID STRUTS AND SNUBBERS N.B. 24" / 600mm

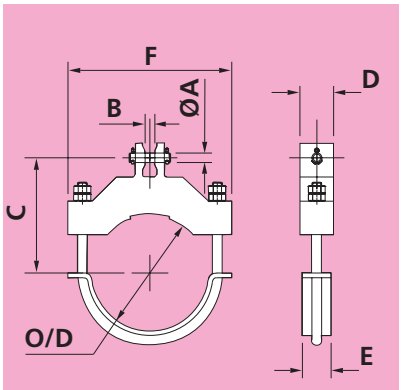

Type 513 Clamp

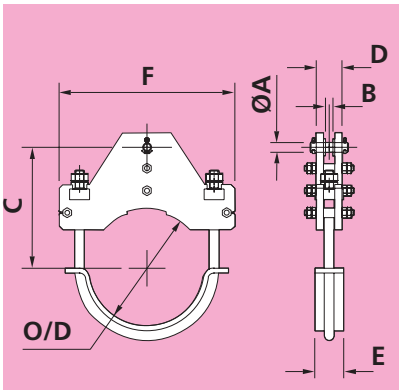

Type 514 Clamp

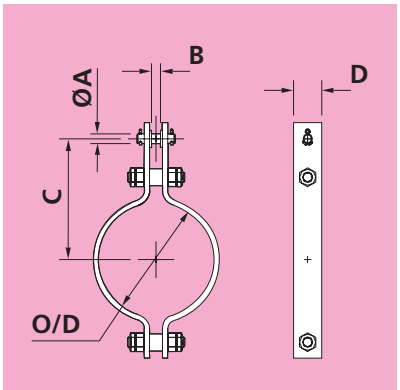

Type 515 Clamp

Fig. No.	Pipe O/D	Max. Pipe Temp	Max. Load			Dia. A	B	C		D	E	F	Clamp Weight		
	mm	°C	kgf	kN	lbs	mm	mm	mm	in	mm	mm	mm	kgf	N	lbs
513-600-1-400	609.6	400	423	4.15	933	10	9	407	16.02	25	20	660	25.1	246	55.4
514-600-1-400	609.6	400	423	4.15	933	10	9	407	16.02	46	20	706	8.1	80	17.9
515-600-1-400	609.6	400	423	4.15	933	10	9	405	15.94	50			8.9	87	19.6
513-600-2-400	609.6	400	985	9.66	2172	10	9	407	16.02	25	30	667	27.6	271	60.9
514-600-2-400	609.6	400	985	9.66	2172	10	9	407	16.02	49	30	716	10.9	107	24.1
515-600-2-400	609.6	400	985	9.66	2172	10	9	410	16.14	80			21.7	213	47.8
513-600-3-400	609.6	400	2125	20.8	4684	15	12	427	16.81	30	40	692	38.6	379	85.1
514-600-3-400	609.6	400	2125	20.8	4684	15	12	413	16.26	57	40	764	28.0	275	61.7
515-600-3-400	609.6	400	2125	20.8	4684	15	12	435	17.13	100			37.5	368	82.8
513-600-4-400	609.6	400	4293	42.1	9465	20	16	456	17.95	40	50	706	56.7	556	125.0
514-600-4-400	609.6	400	4293	42.1	9465	20	16	424	16.69	63	50	784	42.6	418	94.0
515-600-4-400	609.6	400	4293	42.1	9465	20	16	470	18.50	110			55.4	544	122.2
513-600-5-400	609.6	400	6324	62	13942	25	20	471	18.54	50	50	724	75.3	739	166.1
514-600-5-400	609.6	400	6324	62	13942	25	20	429	16.89	69	50	818	64.3	630	141.7
515-600-5-400	609.6	400	6324	62	13942	25	20	485	19.09	110			67.6	663	149.1
514-600-6-400	609.6	400	12754	125	28117	35	25	479	18.86	86	80	860	77.3	758	170.4
515-600-6-400	609.6	400	12754	125	28117	35	25	535	21.06	130			115.5	1133	254.7
514-600-7-400	609.6	400	18132	178	39974	40	28	517	20.35	92	90	882	129.6	1271	285.7
515-600-7-400	609.6	400	18132	178	39974	40	28	565	22.24	190			175.9	1725	387.8
514-600-8-400	609.6	400	25524	250	56269	50	35	522	20.55	110	100	936	198.8	1950	438.4
515-600-8-400	609.6	400	25524	250	56269	50	35	600	23.62	180			220.7	2165	486.6
514-600-9-400	609.6	400	55135	541	121552	70	49	642	25.28	148	130	1000	336.7	3302	742.3
514-600-10-400	609.6	400	70330	690	155050	80	55	704	27.72	166	150	1034	481.9	4725	1062.3
514-600-11-400	609.6	400	90785	890	200144	90	60	785	30.91	194	190	1112	712.1	6983	1569.8
513-600-1-490	609.6	490	423	4.15	933	10	9	407	16.02	25	20	660	25.1	246	55.4
514-600-1-490	609.6	490	423	4.15	933	10	9	407	16.02	46	20	706	8.1	80	17.9
515-600-1-490	609.6	490	423	4.15	933	10	9	405	15.94	50			8.8	86	19.4
513-600-2-490	609.6	490	985	9.66	2172	10	9	407	16.02	25	30	667	27.6	271	60.9
514-600-2-490	609.6	490	985	9.66	2172	10	9	407	16.02	49	30	716	10.9	107	24.1
515-600-2-490	609.6	490	985	9.66	2172	10	9	405	15.94	80			17.0	167	37.4
513-600-3-490	609.6	490	2125	20.8	4684	15	12	426	16.77	30	40	692	38.6	378	85.0
514-600-3-490	609.6	490	2125	20.8	4684	15	12	413	16.26	57	40	764	29.6	290	65.2
515-600-3-490	609.6	490	2125	20.8	4684	15	12	425	16.73	100			36.7	360	81.0
513-600-4-490	609.6	490	4293	42.1	9465	20	16	455	17.91	40	50	706	56.4	553	124.3
514-600-4-490	609.6	490	4293	42.1	9465	20	16	424	16.69	63	50	784	42.7	418	94.1
515-600-4-490	609.6	490	4293	42.1	9465	20	16	460	18.11	100			49.1	481	108.2
513-600-5-490	609.6	490	6324	62	13942	25	20	470	18.50	50	50	724	74.9	734	165.1
514-600-5-490	609.6	490	6324	62	13942	25	20	429	16.89	69	50	818	64.3	631	141.8
515-600-5-490	609.6	490	6324	62	13942	25	20	480	18.90	100			60.2	591	132.8
514-600-6-490	609.6	490	12754	125	28117	35	25	455	17.91	86	70	850	96.3	944	212.2
515-600-6-490	609.6	490	12754	125	28117	35	25	530	20.87	120			104.6	1026	230.6
514-600-7-490	609.6	490	18132	178	39974	40	28	481	18.94	92	80	876	105.9	1039	233.5
515-600-7-490	609.6	490	18132	178	39974	40	28	545	21.46	180			160.6	1575	354.0
514-600-8-490	609.6	490	25524	250	56269	50	35	522	20.55	110	90	924	185.5	1819	408.8
515-600-8-490	609.6	490	25524	250	56269	50	35	590	23.23	180			214.0	2099	471.8
514-600-9-490	609.6	490	55135	541	121552	70	49	633	24.92	148	130	1000	331.2	3248	730.2
514-600-10-490	609.6	490	70330	690	155050	80	55	693	27.28	166	150	1034	471.6	4625	1039.8
514-600-11-490	609.6	490	90785	890	200144	90	60	777	30.59	194	170	1102	626.1	6140	1380.3

CLAMPS FOR RIGID STRUTS AND SNUBBERS N.B. 24" / 600mm

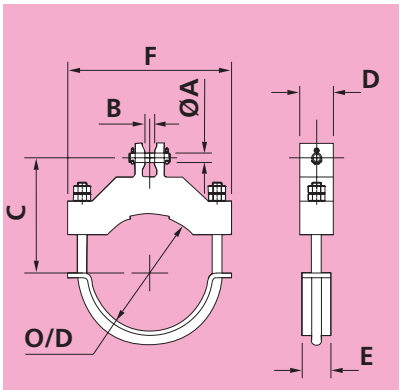

Type 513 Clamp

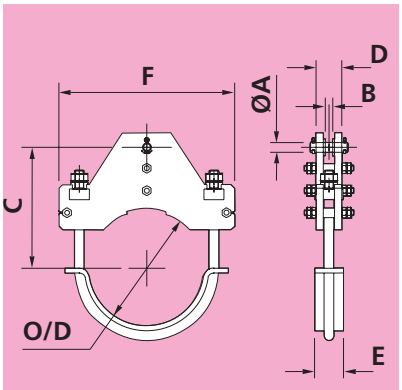

Type 514 Clamp

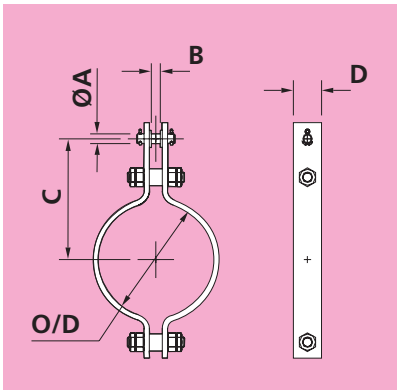

Type 515 Clamp

Fig. No.	Pipe O/D	Max. Pipe Temp	Max. Load			Dia. A	B	C		D	E	F	Clamp Weight		
	mm	°C	kgf	kN	lbs	mm	mm	mm	in	mm	mm	mm	kgf	N	lbs
513-600-1-530	609.6	530	423	4.15	933	10	9	407	16.02	25	30	667	26.3	258	57.9
514-600-1-530	609.6	530	423	4.15	933	10	9	407	16.02	46	30	708	9.1	89	20.0
515-600-1-530	609.6	530	423	4.15	933	10	9	405	15.94	70			14.7	144	32.5
513-600-2-530	609.6	530	985	9.66	2172	10	9	407	16.02	25	30	678	28.9	283	63.7
514-600-2-530	609.6	530	985	9.66	2172	10	9	407	16.02	49	30	722	17.4	171	38.5
515-600-2-530	609.6	530	985	9.66	2172	10	9	405	15.94	80			21.3	209	46.9
513-600-3-530	609.6	530	2125	20.8	4684	15	12	419	16.50	40	50	706	50.5	495	111.3
514-600-3-530	609.6	530	2125	20.8	4684	15	12	413	16.26	57	50	768	42.7	419	94.1
515-600-3-530	609.6	530	2125	20.8	4684	15	12	425	16.73	100			36.7	360	81.0
513-600-4-530	609.6	530	4293	42.1	9465	20	16	448	17.64	50	50	724	70.0	687	154.4
514-600-4-530	609.6	530	4293	42.1	9465	20	16	423	16.65	63	50	792	61.4	602	135.3
515-600-4-530	609.6	530	4293	42.1	9465	20	16	460	18.11	120			58.7	576	129.5
513-600-5-530	609.6	530	6324	62	13942	25	20	463	18.23	60	70	745	91.7	899	202.1
514-600-5-530	609.6	530	6324	62	13942	25	20	450	17.72	69	70	824	76.2	747	167.9
515-600-5-530	609.6	530	6324	62	13942	25	20	480	18.90	120			72.1	707	158.9
514-600-6-530	609.6	530	12754	125	28117	35	25	479	18.86	86	80	860	91.0	892	200.6
515-600-6-530	609.6	530	12754	125	28117	35	25	530	20.87	140			121.6	1192	268.0
514-600-7-530	609.6	530	18132	178	39974	40	28	517	20.35	92	90	882	138.5	1358	305.3
515-600-7-530	609.6	530	18132	178	39974	40	28	545	21.46	200			177.9	1745	392.3
514-600-8-530	609.6	530	25524	250	56269	50	35	522	20.55	110	100	936	198.4	1945	437.3
515-600-8-530	609.6	530	25524	250	56269	50	35	590	23.23	180			214.0	2099	471.8
514-600-9-530	609.6	530	55135	541	121552	70	49	638	25.12	148	130	1000	334.6	3281	737.6
514-600-10-530	609.6	530	70330	690	155050	80	55	695	27.36	166	150	1034	475.9	4667	1049.1
514-600-11-530	609.6	530	90785	890	200144	90	60	777	30.59	194	170	1102	626.1	6140	1380.3
513-600-1-570	609.6	570	423	4.15	933	10	9	407	16.02	25	30	678	27.9	273	61.4
514-600-1-570	609.6	570	423	4.15	933	10	9	407	16.02	46	30	714	10.3	101	22.8
515-600-1-570	609.6	570	423	4	933	10	9	405	15.94	70			14.7	144.5	32.5
513-600-2-570	609.6	570	985	9.66	2172	10	9	407	16.02	30	40	692	36.3	356	79.9
514-600-2-570	609.6	570	985	9.66	2172	10	9	407	16.02	49	40	726	28.9	283	63.7
515-600-2-570	609.6	570	985	10	2172	10	9	405	15.94	100			26.6	260.6	58.6
513-600-3-570	609.6	570	2125	20.8	4684	15	12	420	16.54	50	50	724	64.7	635	142.7
514-600-3-570	609.6	570	2125	20.8	4684	15	12	421	16.57	57	50	776	54.4	534	120.0
515-600-3-570	609.6	570	2125	21	4684	15	12	435	17.13	90			41.7	409.4	92.0
513-600-4-570	609.6	570	4293	42.1	9465	20	16	448	17.64	60	70	745	87.8	861	193.6
514-600-4-570	609.6	570	4293	42.1	9465	20	16	447	17.60	63	70	798	69.1	678	152.4
515-600-4-570	609.6	570	4293	42	9465	20	16	465	18.31	110			63.9	626.4	140.8
513-600-5-570	609.6	570	6324	62	13942	25	20	464	18.27	70	80	770	112.6	1105	248.3
514-600-5-570	609.6	570	6324	62	13942	25	20	474	18.66	79	80	834	61.7	605	136.1
515-600-5-570	609.6	570	6324	62	13942	25	20	480	18.90	160			95.7	938.8	211.0
514-600-6-570	609.6	570	12754	125	28117	35	25	515	20.28	86	90	866	95.1	933	209.8
515-600-6-570	609.6	570	12754	125	28117	35	25	530	20.87	180			155.5	1525	342.8
514-600-7-570	609.6	570	18132	178	39974	40	28	517	20.35	92	100	894	146.4	1435	322.7
515-600-7-570	609.6	570	18132	178	39974	40	28	565	22.24	180			203.9	1999	449.5
514-600-8-570	609.6	570	25524	250	56269	50	35	558	21.97	110	120	944	229.3	2248	505.4
515-600-8-570	609.6	570	25524	250	56269	50	35	580	22.83	210			242.3	2376	534.1
514-600-9-570	609.6	570	55135	541	121552	70	49	664	26.14	148	130	1000	352.4	3456	777.0
514-600-10-570	609.6	570	70330	690	155050	80	55	720	28.35	166	150	1034	495.7	4861	1092.9
514-600-11-570	609.6	570	90785	890	200144	90	60	789	31.06	194	170	1102	640.3	6279	1411.5

CLAMPS FOR RIGID STRUTS AND SNUBBERS N.B. 26" / 650mm

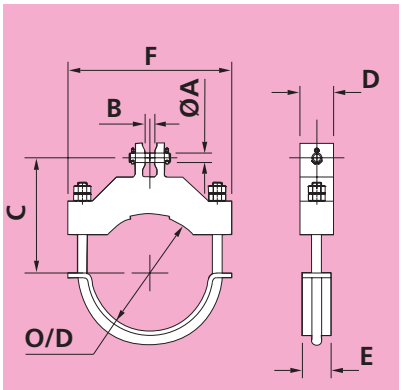

Type 513 Clamp

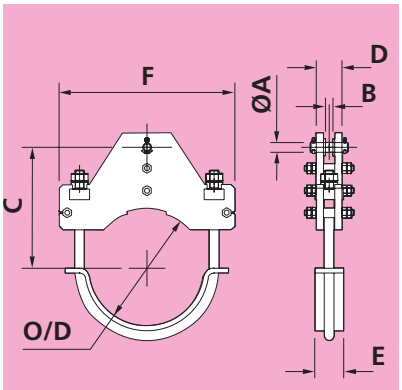

Type 514 Clamp

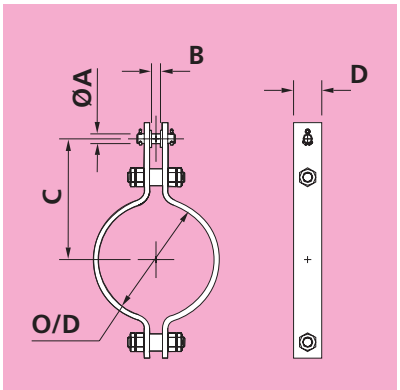

Type 515 Clamp

Fig. No.	Pipe O/D	Max. Pipe Temp	Max. Load			Dia. A	B	C		D	E	F	Clamp Weight		
	mm	°C	kgf	kN	lbs	mm	mm	mm	in	mm	mm	mm	kgf	N	lbs
513-650-1-400	660.4	400	423	4.15	933	10	9	457	17.99	30	20	710	35.2	345	77.6
514-650-1-400	660.4	400	423	4.15	933	10	9	457	17.99	46	20	756	16.8	165	37.0
515-650-1-400	660.4	400	423	4.15	933	10	9	455	17.91	50			9.7	95	21.4
513-650-2-400	660.4	400	985	9.66	2172	10	9	457	17.99	30	30	717	38.3	376	84.5
514-650-2-400	660.4	400	985	9.66	2172	10	9	457	17.99	49	30	766	14.6	144	32.3
515-650-2-400	660.4	400	985	9.66	2172	10	9	455	17.91	80			23.5	231	51.9
513-650-3-400	660.4	400	2125	20.8	4684	15	12	464	18.27	30	40	742	44.7	439	98.6
514-650-3-400	660.4	400	2125	20.8	4684	15	12	463	18.23	57	40	814	18.9	185	41.7
515-650-3-400	660.4	400	2125	20.8	4684	15	12	460	18.11	100			40.0	392	88.2
513-650-4-400	660.4	400	4293	42.1	9465	20	16	485	19.09	40	50	756	64.4	631	141.9
514-650-4-400	660.4	400	4293	42.1	9465	20	16	474	18.66	63	50	834	28.6	280	63.0
515-650-4-400	660.4	400	4293	42.1	9465	20	16	495	19.49	110			58.8	576	129.5
513-650-5-400	660.4	400	6324	62	13942	25	20	500	19.69	50	50	774	85.2	835	187.8
514-650-5-400	660.4	400	6324	62	13942	25	20	479	18.86	69	50	868	47.5	466	104.7
515-650-5-400	660.4	400	6324	62	13942	25	20	510	20.08	110			71.6	702	157.9
514-650-6-400	660.4	400	12754	125	28117	35	25	504	19.84	86	80	910	89.0	873	196.3
515-650-6-400	660.4	400	12754	125	28117	35	25	565	22.24	140			131.8	1293	290.6
514-650-7-400	660.4	400	18132	178	39974	40	28	542	21.34	92	90	932	139.5	1368	307.5
515-650-7-400	660.4	400	18132	178	39974	40	28	590	23.23	200			194.4	1907	428.6
514-650-8-400	660.4	400	25524	250	56269	50	35	547	21.54	110	100	986	214.5	2104	472.9
515-650-8-400	660.4	400	25524	250	56269	50	35	625	24.61	190			243.8	2391	537.5
514-650-9-400	660.4	400	55135	541	121552	70	49	656	25.83	148	130	1050	344.6	3379	759.7
514-650-10-400	660.4	400	70330	690	155050	80	55	717	28.23	166	150	1084	462.0	4531	1018.5
514-650-11-400	660.4	400	90785	890	200144	90	60	800	31.50	194	190	1162	763.7	7489	1683.6
513-650-1-490	660.4	490	423	4.15	933	10	9	457	17.99	30	20	710	35.2	345	77.6
514-650-1-490	660.4	490	423	4.15	933	10	9	457	17.99	46	20	756	16.8	165	37.1
515-650-1-490	660.4	490	423	4.15	933	10	9	455	17.91	50			9.6	94	21.2
513-650-2-490	660.4	490	985	9.66	2172	10	9	457	17.99	30	30	717	38.3	376	84.5
514-650-2-490	660.4	490	985	9.66	2172	10	9	457	17.99	49	30	766	14.7	144	32.3
515-650-2-490	660.4	490	985	9.66	2172	10	9	455	17.91	80			23.2	228	51.2
513-650-3-490	660.4	490	2125	20.8	4684	15	12	464	18.27	30	40	742	44.5	437	98.2
514-650-3-490	660.4	490	2125	20.8	4684	15	12	463	18.23	57	40	814	18.9	186	41.7
515-650-3-490	660.4	490	2125	20.8	4684	15	12	460	18.11	100			39.5	387	87.1
513-650-4-490	660.4	490	4293	42.1	9465	20	16	484	19.06	40	50	756	64.0	628	141.1
514-650-4-490	660.4	490	4293	42.1	9465	20	16	474	18.66	63	50	834	28.6	280	63.0
515-650-4-490	660.4	490	4293	42.1	9465	20	16	485	19.09	110			57.2	561	126.2
513-650-5-490	660.4	490	6324	62	13942	25	20	499	19.65	50	50	774	84.7	831	186.8
514-650-5-490	660.4	490	6324	62	13942	25	20	479	18.86	69	50	868	47.6	466	104.9
515-650-5-490	660.4	490	6324	62	13942	25	20	505	19.88	110			70.1	688	154.6
514-650-6-490	660.4	490	12754	125	28117	35	25	494	19.45	86	70	900	87.7	860	193.3
515-650-6-490	660.4	490	12754	125	28117	35	25	555	21.85	130			119.4	1171	263.2
514-650-7-490	660.4	490	18132	178	39974	40	28	506	19.92	92	80	926	120.4	1180	265.3
515-650-7-490	660.4	490	18132	178	39974	40	28	570	22.44	190			178.3	1749	393.2
514-650-8-490	660.4	490	25524	250	56269	50	35	547	21.54	110	90	974	200.0	1962	441.0
515-650-8-490	660.4	490	25524	250	56269	50	35	620	24.41	180			226.2	2218	498.6
514-650-9-490	660.4	490	55135	541	121552	70	49	689	27.13	138	130	1050	338.8	3323	747.0
514-650-10-490	660.4	490	70330	690	155050	80	55	708	27.87	166	150	1084	455.5	4466	1004.1
514-650-11-490	660.4	490	90785	890	200144	90	60	793	31.22	194	170	1152	710.6	6968	1566.6

CLAMPS FOR RIGID STRUTS AND SNUBBERS N.B. 26" / 650mm

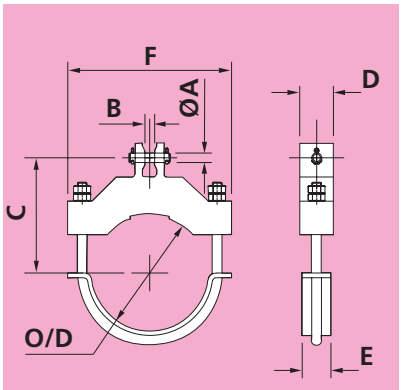

Type 513 Clamp

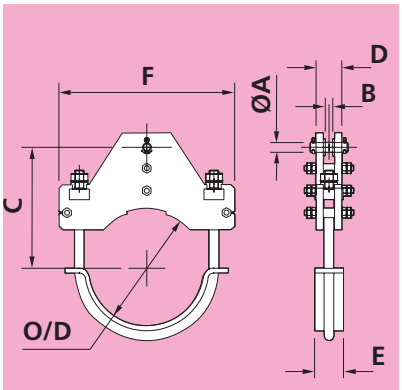

Type 514 Clamp

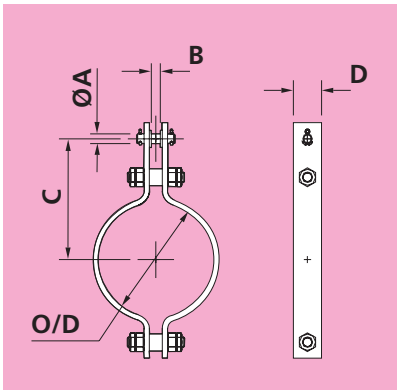

Type 515 Clamp

Fig. No.	Pipe O/D	Max. Pipe Temp	Max. Load			Dia. A	B	C		D	E	F	Clamp Weight		
	mm	°C	kgf	kN	lbs	mm	mm	mm	in	mm	mm	mm	kgf	N	lbs
513-650-1-530	660.4	530	423	4.15	933	10	9	457	17.99	30	30	717	36.6	359	80.6
514-650-1-530	660.4	530	423	4.15	933	10	9	457	17.99	46	30	758	17.8	175	39.3
515-650-1-530	660.4	530	423	4.15	933	10	9	455	17.91	70			16.1	158	35.5
513-650-2-530	660.4	530	985	9.66	2172	10	9	457	17.99	30	30	728	39.8	390	87.7
514-650-2-530	660.4	530	985	9.66	2172	10	9	457	17.99	49	30	772	13.9	136	30.6
515-650-2-530	660.4	530	985	9.66	2172	10	9	455	17.91	80			23.2	228	51.2
513-650-3-530	660.4	530	2125	20.8	4684	15	12	464	18.27	40	50	756	59.0	579	130.1
514-650-3-530	660.4	530	2125	20.8	4684	15	12	462	18.19	57	50	818	27.3	268	60.3
515-650-3-530	660.4	530	2125	20.8	4684	15	12	460	18.11	100			39.5	387	87.1
513-650-4-530	660.4	530	4293	42.1	9465	20	16	476	18.74	50	50	774	79.1	775	174.3
514-650-4-530	660.4	530	4293	42.1	9465	20	16	473	18.62	63	50	842	49.0	481	108.1
515-650-4-530	660.4	530	4293	42.1	9465	20	16	495	19.49	100			63.0	618	138.9
513-650-5-530	660.4	530	6324	62	13942	25	20	492	19.37	60	70	795	103.1	1011	227.3
514-650-5-530	660.4	530	6324	62	13942	25	20	479	18.86	69	70	874	85.7	841	189.0
515-650-5-530	660.4	530	6324	62	13942	25	20	505	19.88	130			82.7	811	182.3
514-650-6-530	660.4	530	12754	125	28117	35	25	504	19.84	86	80	910	104.1	1021	229.4
515-650-6-530	660.4	530	12754	125	28117	35	25	555	21.85	150			137.3	1346	302.7
514-650-7-530	660.4	530	18132	178	39974	40	28	542	21.34	92	90	932	147.0	1442	324.1
515-650-7-530	660.4	530	18132	178	39974	40	28	570	22.44	210			196.7	1929	433.5
514-650-8-530	660.4	530	25524	250	56269	50	35	547	21.54	110	100	986	215.0	2108	473.9
515-650-8-530	660.4	530	25524	250	56269	50	35	620	24.41	190			238.3	2337	525.4
514-650-9-530	660.4	530	55135	541	121552	70	49	691	27.20	138	130	1050	340.0	3334	749.5
514-650-10-530	660.4	530	70330	690	155050	80	55	708	27.87	166	150	1084	455.7	4469	1004.6
514-650-11-530	660.4	530	90785	890	200144	90	60	793	31.22	194	170	1152	710.6	6968	1566.6
513-650-1-570	660.4	570	423	4.15	933	10	9	457	17.99	30	30	728	38.3	376	84.4
514-650-1-570	660.4	570	423	4.15	933	10	9	457	17.99	46	30	764	18.4	180	40.5
515-650-1-570	660.4	570	423	4	933	10	9	455	17.91	70			16.1	157.8	35.5
513-650-2-570	660.4	570	985	9.66	2172	10	9	457	17.99	30	40	742	42.9	420	94.5
514-650-2-570	660.4	570	985	9.66	2172	10	9	457	17.99	49	40	776	16.9	166	37.3
515-650-2-570	660.4	570	985	10	2172	10	9	455	17.91	100			38.7	379.4	85.3
513-650-3-570	660.4	570	2125	20.8	4684	15	12	464	18.27	50	50	774	75.4	739	166.2
514-650-3-570	660.4	570	2125	20.8	4684	15	12	463	18.23	57	50	826	47.5	466	104.8
515-650-3-570	660.4	570	2125	21	4684	15	12	460	18.11	90			44.5	436.4	98.1
513-650-4-570	660.4	570	4293	42.1	9465	20	16	476	18.74	60	70	795	99.3	974	219.0
514-650-4-570	660.4	570	4293	42.1	9465	20	16	472	18.58	63	70	848	74.4	729	163.9
515-650-4-570	660.4	570	4293	42	9465	20	16	490	19.29	110			67.9	666.1	149.7
513-650-5-570	660.4	570	6324	62	13942	25	20	492	19.37	70	80	820	126.2	1238	278.2
514-650-5-570	660.4	570	6324	62	13942	25	20	499	19.65	79	80	884	63.8	625	140.6
515-650-5-570	660.4	570	6324	62	13942	25	20	525	20.67	120			103.7	1016	228.5
514-650-6-570	660.4	570	12754	125	28117	35	25	540	21.26	86	90	916	105.1	1031	231.8
515-650-6-570	660.4	570	12754	125	28117	35	25	555	21.85	190			173.2	1698	381.8
514-650-7-570	660.4	570	18132	178	39974	40	28	542	21.34	92	100	944	161.8	1587	356.7
515-650-7-570	660.4	570	18132	178	39974	40	28	590	23.23	180			214.6	2105	473.2
514-650-8-570	660.4	570	25524	250	56269	50	35	583	22.95	110	120	994	244.4	2396	538.7
515-650-8-570	660.4	570	25524	250	56269	50	35	620	24.41	240			299.2	2934	659.5
514-650-9-570	660.4	570	55135	541	121552	70	49	679	26.73	148	130	1050	359.7	3527	792.9
514-650-10-570	660.4	570	70330	690	155050	80	55	734	28.90	166	150	1084	477.0	4677	1051.5
514-650-11-570	660.4	570	90785	890	200144	90	60	805	31.69	194	170	1152	719.6	7056	1586.3

CLAMPS FOR RIGID STRUTS AND SNUBBERS N.B. 28" / 700mm

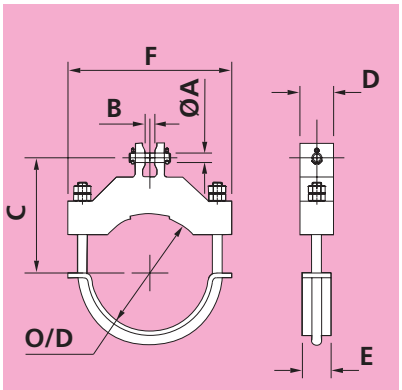

Type 513 Clamp

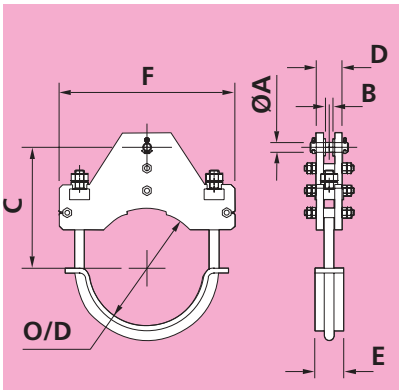

Type 514 Clamp

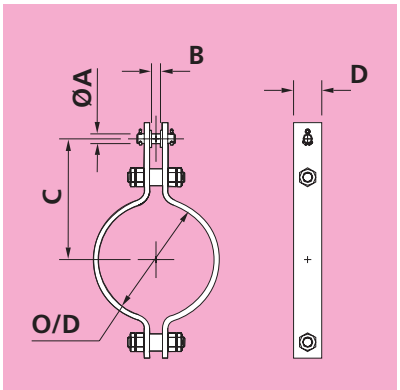

Type 515 Clamp

Fig. No.	Pipe O/D	Max. Pipe Temp	Max. Load			Dia. A	B	C		D	E	F	Clamp Weight		
	mm	°C	kgf	kN	lbs	mm	mm	mm	in	mm	mm	mm	kgf	N	lbs
513-700-1-400	711.2	400	423	4.15	933	10	9	482	18.98	30	20	760	39.9	392	88.0
514-700-1-400	711.2	400	423	4.15	933	10	9	482	18.98	46	20	806	13.4	132	29.6
515-700-1-400	711.2	400	423	4.15	933	10	9	480	18.90	60			12.4	121	27.3
513-700-2-400	711.2	400	985	9.66	2172	10	9	482	18.98	30	30	767	43.2	423	95.1
514-700-2-400	711.2	400	985	9.66	2172	10	9	482	18.98	49	30	816	12.4	121	27.3
515-700-2-400	711.2	400	985	9.66	2172	10	9	480	18.90	80			25.0	245	55.1
513-700-3-400	711.2	400	2125	20.8	4684	15	12	489	19.25	30	40	792	49.9	490	110.1
514-700-3-400	711.2	400	2125	20.8	4684	15	12	488	19.21	57	40	864	22.0	215	48.4
515-700-3-400	711.2	400	2125	20.8	4684	15	12	485	19.09	100			42.4	416	93.6
513-700-4-400	711.2	400	4293	42.1	9465	20	16	514	20.24	40	50	806	72.0	706	158.8
514-700-4-400	711.2	400	4293	42.1	9465	20	16	499	19.65	63	50	884	35.7	350	78.8
515-700-4-400	711.2	400	4293	42.1	9465	20	16	520	20.47	120			67.7	663	149.1
513-700-5-400	711.2	400	6324	62	13942	25	20	530	20.87	50	50	824	95.5	937	210.6
514-700-5-400	711.2	400	6324	62	13942	25	20	504	19.84	69	50	918	60.5	593	133.3
515-700-5-400	711.2	400	6324	62	13942	25	20	550	21.65	130			91.9	901	202.6
514-700-6-400	711.2	400	12754	125	28117	35	25	529	20.83	86	80	960	126.0	1235	277.7
515-700-6-400	711.2	400	12754	125	28117	35	25	590	23.23	150			148.2	1453	326.8
514-700-7-400	711.2	400	18132	178	39974	40	28	567	22.32	92	90	982	170.9	1676	376.8
515-700-7-400	711.2	400	18132	178	39974	40	28	615	24.21	210			214.0	2099	471.8
514-700-8-400	711.2	400	25524	250	56269	50	35	572	22.52	110	100	1036	230.4	2260	508.0
515-700-8-400	711.2	400	25524	250	56269	50	35	655	25.79	200			269.8	2646	594.9
514-700-9-400	711.2	400	55135	541	121552	70	49	714	28.11	138	130	1100	377.8	3705	832.9
514-700-10-400	711.2	400	70330	690	155050	80	55	732	28.82	166	150	1134	473.1	4639	1043.0
514-700-11-400	711.2	400	90785	890	200144	90	60	816	32.13	194	190	1212	748.3	7338	1649.7
513-700-1-490	711.2	490	423	4.15	933	10	9	482	18.98	30	20	760	39.7	389	87.5
514-700-1-490	711.2	490	423	4.15	933	10	9	482	18.98	46	20	806	13.4	132	29.6
515-700-1-490	711.2	490	423	4.15	933	10	9	480	18.90	60			12.2	120	27.0
513-700-2-490	711.2	490	985	9.66	2172	10	9	482	18.98	30	30	767	43.2	423	95.1
514-700-2-490	711.2	490	985	9.66	2172	10	9	482	18.98	49	30	816	12.4	121	27.3
515-700-2-490	711.2	490	985	9.66	2172	10	9	480	18.90	80			24.7	242	54.5
513-700-3-490	711.2	490	2125	20.8	4684	15	12	489	19.25	30	40	792	49.7	488	109.6
514-700-3-490	711.2	490	2125	20.8	4684	15	12	488	19.21	57	40	864	22.0	215	48.4
515-700-3-490	711.2	490	2125	20.8	4684	15	12	485	19.09	100			41.9	411	92.5
513-700-4-490	711.2	490	4293	42.1	9465	20	16	512	20.16	40	50	806	71.8	704	158.3
514-700-4-490	711.2	490	4293	42.1	9465	20	16	499	19.65	63	50	884	35.8	351	78.8
515-700-4-490	711.2	490	4293	42.1	9465	20	16	510	20.08	110			60.6	594	133.6
513-700-5-490	711.2	490	6324	62	13942	25	20	528	20.79	50	50	824	94.9	930	209.1
514-700-5-490	711.2	490	6324	62	13942	25	20	504	19.84	69	50	918	60.5	594	133.5
515-700-5-490	711.2	490	6324	62	13942	25	20	530	20.87	110			74.2	727	163.5
514-700-6-490	711.2	490	12754	125	28117	35	25	519	20.43	86	70	950	101.2	992	223.0
515-700-6-490	711.2	490	12754	125	28117	35	25	585	23.03	140			136.0	1334	299.8
514-700-7-490	711.2	490	18132	178	39974	40	28	531	20.91	92	80	976	96.5	946	212.7
515-700-7-490	711.2	490	18132	178	39974	40	28	600	23.62	200			198.4	1946	437.5
514-700-8-490	711.2	490	25524	250	56269	50	35	572	22.52	110	90	1024	213.7	2096	471.1
515-700-8-490	711.2	490	25524	250	56269	50	35	645	25.39	190			249.8	2450	550.8
514-700-9-490	711.2	490	55135	541	121552	70	49	704	27.72	138	130	1100	371.9	3647	819.9
514-700-10-490	711.2	490	70330	690	155050	80	55	763	30.04	156	150	1134	465.1	4562	1025.5
514-700-11-490	711.2	490	90785	890	200144	90	60	806	31.73	194	170	1202	684.4	6712	1508.8

CLAMPS FOR RIGID STRUTS AND SNUBBERS N.B. 28" / 700mm

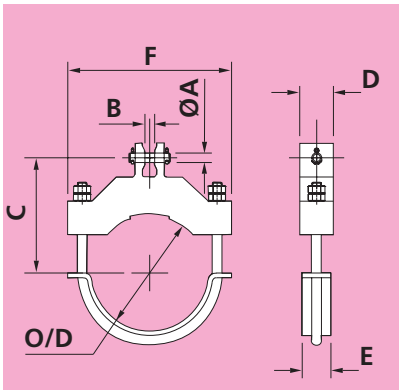

Type 513 Clamp

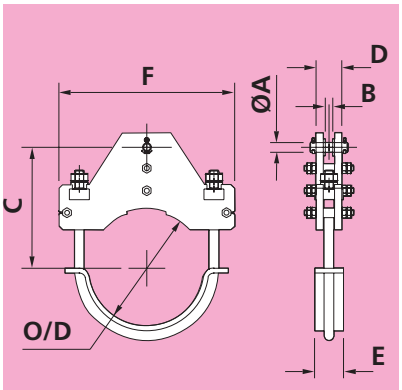

Type 514 Clamp

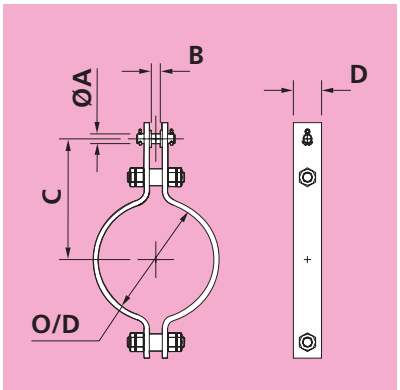

Type 515 Clamp

Fig. No.	Pipe O/D	Max. Pipe Temp	Max. Load			Dia. A	B	C		D	E	F	Clamp Weight		
	mm	°C	kgf	kN	lbs	mm	mm	mm	in	mm	mm	mm	kgf	N	lbs
513-700-1-530	711.2	530	423	4.15	933	10	9	482	18.98	30	30	767	41.1	403	90.7
514-700-1-530	711.2	530	423	4.15	933	10	9	482	18.98	46	30	808	14.5	143	32.0
515-700-1-530	711.2	530	423	4.15	933	10	9	480	18.90	70			17.1	168	37.7
513-700-2-530	711.2	530	985	9.66	2172	10	9	482	18.98	30	30	778	44.7	439	98.6
514-700-2-530	711.2	530	985	9.66	2172	10	9	482	18.98	49	30	822	14.1	138	31.1
515-700-2-530	711.2	530	985	9.66	2172	10	9	480	18.90	80			24.7	242	54.5
513-700-3-530	711.2	530	2125	20.8	4684	15	12	489	19.25	40	50	806	65.9	646	145.3
514-700-3-530	711.2	530	2125	20.8	4684	15	12	487	19.17	57	50	868	36.7	360	80.8
515-700-3-530	711.2	530	2125	20.8	4684	15	12	485	19.09	100			41.9	411	92.5
513-700-4-530	711.2	530	4293	42.1	9465	20	16	504	19.84	50	50	824	88.7	870	195.6
514-700-4-530	711.2	530	4293	42.1	9465	20	16	498	19.61	63	50	892	62.6	614	137.9
515-700-4-530	711.2	530	4293	42.1	9465	20	16	520	20.47	100			66.7	654	147.0
513-700-5-530	711.2	530	6324	62	13942	25	20	520	20.47	60	70	845	115.2	1129	253.9
514-700-5-530	711.2	530	6324	62	13942	25	20	504	19.84	69	70	924	92.5	907	204.0
515-700-5-530	711.2	530	6324	62	13942	25	20	530	20.87	130			87.5	858	192.8
514-700-6-530	711.2	530	12754	125	28117	35	25	529	20.83	86	80	960	92.2	904	203.3
515-700-6-530	711.2	530	12754	125	28117	35	25	585	23.03	160			155.0	1520	341.8
514-700-7-530	711.2	530	18132	178	39974	40	28	567	22.32	102	90	982	121.0	1187	266.8
515-700-7-530	711.2	530	18132	178	39974	40	28	620	24.41	180			227.0	2226	500.3
514-700-8-530	711.2	530	25524	250	56269	50	35	572	22.52	110	100	1036	230.9	2264	509.0
515-700-8-530	711.2	530	25524	250	56269	50	35	645	25.39	200			262.6	2575	578.9
514-700-9-530	711.2	530	55135	541	121552	70	49	705	27.76	138	130	1100	372.8	3656	821.8
514-700-10-530	711.2	530	70330	690	155050	80	55	763	30.04	156	150	1134	465.1	4562	1025.5
514-700-11-530	711.2	530	90785	890	200144	90	60	806	31.73	194	170	1202	684.4	6712	1508.8
513-700-1-570	711.2	570	423	4.15	933	10	9	482	18.98	30	30	778	43.2	423	95.2
514-700-1-570	711.2	570	423	4.15	933	10	9	482	18.98	46	30	814	15.4	151	33.9
515-700-1-570	711.2	570	423	4	933	10	9	480	18.9	80			19.6	191.8	43.1
513-700-2-570	711.2	570	985	9.66	2172	10	9	482	18.98	30	40	792	48.0	471	105.8
514-700-2-570	711.2	570	985	9.66	2172	10	9	482	18.98	49	40	826	21.3	208	46.8
515-700-2-570	711.2	570	985	10	2172	10	9	480	18.9	100			41.2	403.7	90.8
513-700-3-570	711.2	570	2125	20.8	4684	15	12	489	19.25	50	50	824	84.1	825	185.4
514-700-3-570	711.2	570	2125	20.8	4684	15	12	488	19.21	57	50	876	59.1	580	130.3
515-700-3-570	711.2	570	2125	21	4684	15	12	485	19.09	90			47.3	463.5	104.2
513-700-4-570	711.2	570	4293	42.1	9465	20	16	503	19.80	60	70	845	110.6	1084	243.8
514-700-4-570	711.2	570	4293	42.1	9465	20	16	497	19.57	63	70	898	79.4	779	175.1
515-700-4-570	711.2	570	4293	42	9465	20	16	520	20.47	120			79.8	782.7	176.0
513-700-5-570	711.2	570	6324	62	13942	25	20	520	20.47	70	80	870	140.6	1378	309.9
514-700-5-570	711.2	570	6324	62	13942	25	20	524	20.63	79	80	934	134.9	1323	297.4
515-700-5-570	711.2	570	6324	62	13942	25	20	550	21.65	120			109.5	1073	241.3
514-700-6-570	711.2	570	12754	125	28117	35	25	565	22.24	96	90	966	110.4	1083	243.4
515-700-6-570	711.2	570	12754	125	28117	35	25	585	23.03	210			202.6	1987	446.6
514-700-7-570	711.2	570	18132	178	39974	40	28	567	22.32	102	100	994	187.5	1838	413.3
515-700-7-570	711.2	570	18132	178	39974	40	28	620	24.41	180			227.0	2226	500.3
514-700-8-570	711.2	570	25524	250	56269	50	35	608	23.94	110	120	1044	255.2	2503	562.7
515-700-8-570	711.2	570	25524	250	56269	50	35	645	25.39	250			326.5	3201	719.7
514-700-9-570	711.2	570	55135	541	121552	70	49	692	27.24	148	130	1100	401.6	3938	885.3
514-700-10-570	711.2	570	70330	690	155050	80	55	748	29.45	166	150	1134	488.8	4794	1077.7
514-700-11-570	711.2	570	90785	890	200144	90	60	820	32.28	194	170	1202	698.8	6853	1540.5

CLAMPS FOR RIGID STRUTS AND SNUBBERS N.B. 30" / 750mm

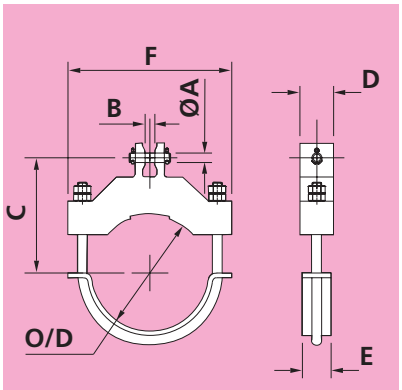

Type 513 Clamp

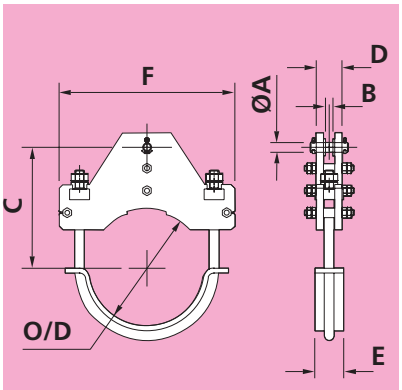

Type 514 Clamp

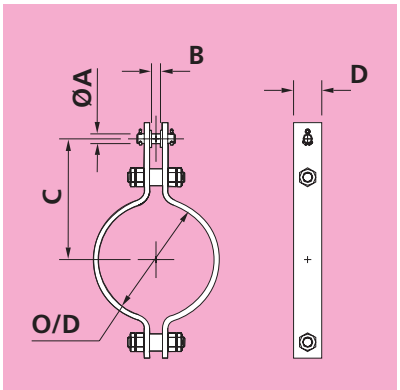

Type 515 Clamp

Fig. No.	Pipe O/D	Max. Pipe Temp	Max. Load			Dia. A	B	C		D	E	F	Clamp Weight		
	mm	°C	kgf	kN	lbs	mm	mm	mm	in	mm	mm	mm	kgf	N	lbs
513-750-1-400	762	400	423	4.15	933	10	9	508	20.00	35	20	812	51.9	509	114.4
514-750-1-400	762	400	423	4.15	933	10	9	508	20.00	56	20	858	14.1	138	31.0
515-750-1-400	762	400	423	4.15	933	10	9	505	19.88	60			13.2	129	29.0
513-750-2-400	762	400	985	9.66	2172	10	9	508	20.00	35	30	819	55.7	546	122.8
514-750-2-400	762	400	985	9.66	2172	10	9	508	20.00	59	30	868	15.0	147	33.0
515-750-2-400	762	400	985	9.66	2172	10	9	505	19.88	80			26.5	260	58.5
513-750-3-400	762	400	2125	20.8	4684	15	12	515	20.28	35	40	844	63.3	620	139.5
514-750-3-400	762	400	2125	20.8	4684	15	12	514	20.24	67	40	916	27.9	274	61.5
515-750-3-400	762	400	2125	20.8	4684	15	12	515	20.28	100			45.9	450	101.1
513-750-4-400	762	400	4293	42.1	9465	20	16	544	21.42	40	50	858	80.9	793	178.3
514-750-4-400	762	400	4293	42.1	9465	20	16	525	20.67	73	50	936	42.0	412	92.7
515-750-4-400	762	400	4293	42.1	9465	20	16	560	22.05	100			72.5	711	159.7
513-750-5-400	762	400	6324	62	13942	25	20	560	22.05	50	50	876	106.5	1045	234.8
514-750-5-400	762	400	6324	62	13942	25	20	530	20.87	79	50	970	68.1	668	150.1
515-750-5-400	762	400	6324	62	13942	25	20	575	22.64	130			96.7	948	213.1
514-750-6-400	762	400	12754	125	28117	35	25	555	21.85	86	80	1012	142.7	1400	314.6
515-750-6-400	762	400	12754	125	28117	35	25	635	25.00	160			171.5	1682	378.1
514-750-7-400	762	400	18132	178	39974	40	28	593	23.35	92	90	1034	182.9	1794	403.3
515-750-7-400	762	400	18132	178	39974	40	28	665	26.18	180			245.6	2408	541.4
514-750-8-400	762	400	25524	250	56269	50	35	598	23.54	110	100	1088	246.4	2417	543.3
515-750-8-400	762	400	25524	250	56269	50	35	680	26.77	210			295.7	2900	652.0
514-750-9-400	762	400	55135	541	121552	70	49	728	28.66	138	130	1152	439.6	4311	969.2
514-750-10-400	762	400	70330	690	155050	80	55	789	31.06	156	150	1186	518.7	5087	1143.6
514-750-11-400	762	400	90785	890	200144	90	60	831	32.72	194	190	1264	732.1	7180	1614.1
513-750-1-490	762	490	423	4.15	933	10	9	508	20.00	35	20	812	51.6	506	113.8
514-750-1-490	762	490	423	4.15	933	10	9	508	20.00	56	20	858	14.1	138	31.0
515-750-1-490	762	490	423	4.15	933	10	9	505	19.88	60			13.0	127	28.6
513-750-2-490	762	490	985	9.66	2172	10	9	508	20.00	35	30	819	55.7	546	122.8
514-750-2-490	762	490	985	9.66	2172	10	9	508	20.00	59	30	868	15.0	147	33.0
515-750-2-490	762	490	985	9.66	2172	10	9	505	19.88	80			26.2	257	57.8
513-750-3-490	762	490	2125	20.8	4684	15	12	515	20.28	35	40	844	63.0	618	138.9
514-750-3-490	762	490	2125	20.8	4684	15	12	514	20.24	67	40	916	27.9	274	61.5
515-750-3-490	762	490	2125	20.8	4684	15	12	510	20.08	100			44.5	436	98.0
513-750-4-490	762	490	4293	42.1	9465	20	16	542	21.34	40	50	858	80.4	788	177.2
514-750-4-490	762	490	4293	42.1	9465	20	16	525	20.67	73	50	936	42.1	413	92.7
515-750-4-490	762	490	4293	42.1	9465	20	16	535	21.06	120			69.8	684	153.8
513-750-5-490	762	490	6324	62	13942	25	20	558	21.97	50	50	876	105.8	1038	233.3
514-750-5-490	762	490	6324	62	13942	25	20	530	20.87	79	50	970	68.1	668	150.2
515-750-5-490	762	490	6324	62	13942	25	20	560	22.05	120			85.8	841	189.2
514-750-6-490	762	490	12754	125	28117	35	25	545	21.46	86	70	1002	140.6	1379	309.9
515-750-6-490	762	490	12754	125	28117	35	25	610	24.02	150			152.9	1499	337.0
514-750-7-490	762	490	18132	178	39974	40	28	557	21.93	92	80	1028	97.9	960	215.9
515-750-7-490	762	490	18132	178	39974	40	28	625	24.61	210			218.6	2143	481.9
514-750-8-490	762	490	25524	250	56269	50	35	598	23.54	110	90	1076	228.8	2244	504.4
515-750-8-490	762	490	25524	250	56269	50	35	670	26.38	190			261.5	2564	576.4
514-750-9-490	762	490	55135	541	121552	70	49	717	28.23	138	130	1152	434.1	4257	956.9
514-750-10-490	762	490	70330	690	155050	80	55	778	30.63	156	150	1186	511.1	5012	1126.8
514-750-11-490	762	490	90785	890	200144	90	60	822	32.36	194	170	1254	670.7	6577	1478.5

CLAMPS FOR RIGID STRUTS AND SNUBBERS N.B. 30" / 750mm

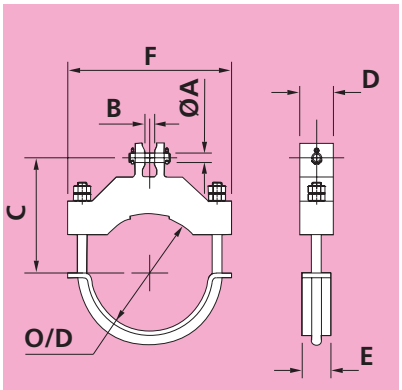

Type 513 Clamp

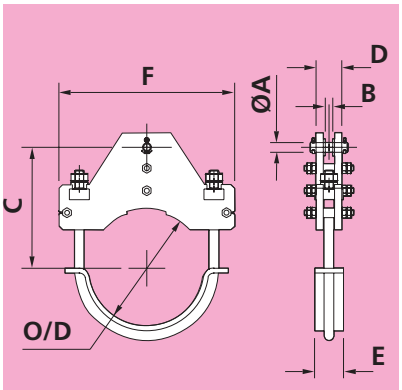

Type 514 Clamp

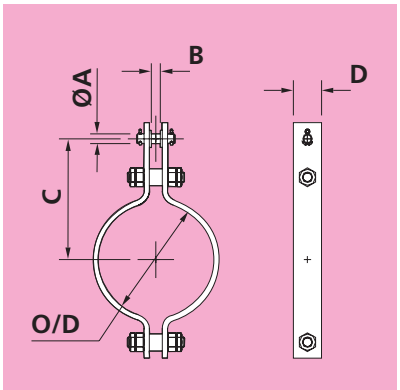

Type 515 Clamp

Fig. No.	Pipe O/D	Max. Pipe Temp	Max. Load			Dia. A	B	C		D	E	F	Clamp Weight		
	mm	°C	kgf	kN	lbs	mm	mm	mm	in	mm	mm	mm	kgf	N	lbs
513-750-1-530	762	530	423	4.15	933	10	9	508	20.00	35	30	819	53.2	522	117.3
514-750-1-530	762	530	423	4.15	933	10	9	508	20.00	56	30	860	15.3	150	33.7
515-750-1-530	762	530	423	4.15	933	10	9	505	19.88	70			18.2	178	40.1
513-750-2-530	762	530	985	9.66	2172	10	9	508	20.00	35	30	830	57.5	564	126.7
514-750-2-530	762	530	985	9.66	2172	10	9	508	20.00	59	30	874	18.0	176	39.6
515-750-2-530	762	530	985	9.66	2172	10	9	505	19.88	80			26.2	257	57.8
513-750-3-530	762	530	2125	20.8	4684	15	12	515	20.28	40	50	858	73.6	722	162.4
514-750-3-530	762	530	2125	20.8	4684	15	12	513	20.20	67	50	920	43.4	426	95.8
515-750-3-530	762	530	2125	20.8	4684	15	12	510	20.08	100			44.5	436	98.0
513-750-4-530	762	530	4293	42.1	9465	20	16	533	20.98	50	50	876	99.1	972	218.6
514-750-4-530	762	530	4293	42.1	9465	20	16	524	20.63	73	50	944	74.0	726	163.2
515-750-4-530	762	530	4293	42.1	9465	20	16	550	21.65	100			70.9	695	156.2
513-750-5-530	762	530	6324	62	13942	25	20	550	21.65	60	70	897	128.3	1258	282.9
514-750-5-530	762	530	6324	62	13942	25	20	530	20.87	79	70	976	108.5	1064	239.1
515-750-5-530	762	530	6324	62	13942	25	20	560	22.05	140			99.9	980	220.3
514-750-6-530	762	530	12754	125	28117	35	25	555	21.85	86	80	1012	97.1	952	214.1
515-750-6-530	762	530	12754	125	28117	35	25	610	24.02	160			162.9	1597	359.1
514-750-7-530	762	530	18132	178	39974	40	28	593	23.35	102	90	1034	133.6	1310	294.4
515-750-7-530	762	530	18132	178	39974	40	28	645	25.39	180			238.0	2334	524.7
514-750-8-530	762	530	25524	250	56269	50	35	598	23.54	110	100	1088	246.9	2421	544.3
515-750-8-530	762	530	25524	250	56269	50	35	670	26.38	210			288.2	2827	635.5
514-750-9-530	762	530	55135	541	121552	70	49	718	28.27	138	130	1152	434.7	4263	958.3
514-750-10-530	762	530	70330	690	155050	80	55	778	30.63	156	150	1186	511.1	5012	1126.8
514-750-11-530	762	530	90785	890	200144	90	60	822	32.36	194	170	1254	670.7	6577	1478.5
513-750-1-570	762	570	423	4.15	933	10	9	508	20.00	35	30	830	55.5	545	122.5
514-750-1-570	762	570	423	4.15	933	10	9	508	20.00	56	30	866	16.9	166	37.3
515-750-1-570	762	570	423	4	933	10	9	505	19.88	80			20.8	203.6	45.8
513-750-2-570	762	570	985	9.66	2172	10	9	508	20.00	35	40	844	60.8	597	134.1
514-750-2-570	762	570	985	9.66	2172	10	9	508	20.00	59	40	878	27.4	268	60.3
515-750-2-570	762	570	985	10	2172	10	9	505	19.88	100			43.7	428.1	96.2
513-750-3-570	762	570	2125	20.8	4684	15	12	515	20.28	50	50	876	93.8	920	206.9
514-750-3-570	762	570	2125	20.8	4684	15	12	514	20.24	67	50	928	70.1	688	154.6
515-750-3-570	762	570	2125	21	4684	15	12	510	20.08	90			50.1	490.9	110.4
513-750-4-570	762	570	4293	42.1	9465	20	16	532	20.94	60	70	897	123.3	1209	271.8
514-750-4-570	762	570	4293	42.1	9465	20	16	523	20.59	73	70	950	117.5	1152	259.0
515-750-4-570	762	570	4293	42	9465	20	16	550	21.65	130			91.9	900.8	202.5
513-750-5-570	762	570	6324	62	13942	25	20	549	21.61	70	80	922	156.0	1530	344.0
514-750-5-570	762	570	6324	62	13942	25	20	550	21.65	79	80	986	147.3	1444	324.6
515-750-5-570	762	570	6324	62	13942	25	20	580	22.83	120			116.2	1139	256.1
514-750-6-570	762	570	12754	125	28117	35	25	591	23.27	96	90	1018	113.9	1117	251.2
515-750-6-570	762	570	12754	125	28117	35	25	610	24.02	210			212.9	2088	469.3
514-750-7-570	762	570	18132	178	39974	40	28	593	23.35	102	100	1046	207.8	2038	458.1
515-750-7-570	762	570	18132	178	39974	40	28	645	25.39	180			238.0	2334	524.7
514-750-8-570	762	570	25524	250	56269	50	35	634	24.96	110	120	1096	270.2	2650	595.8
515-750-8-570	762	570	25524	250	56269	50	35	670	26.38	260			355.2	3483	783.0
514-750-9-570	762	570	55135	541	121552	70	49	707	27.83	148	130	1152	467.2	4581	1029.9
514-750-10-570	762	570	70330	690	155050	80	55	762	30.00	166	150	1186	543.0	5325	1197.2
514-750-11-570	762	570	90785	890	200144	90	60	835	32.87	194	170	1254	683.9	6706	1507.7

CLAMPS FOR RIGID STRUTS AND SNUBBERS N.B. 32" / 800mm

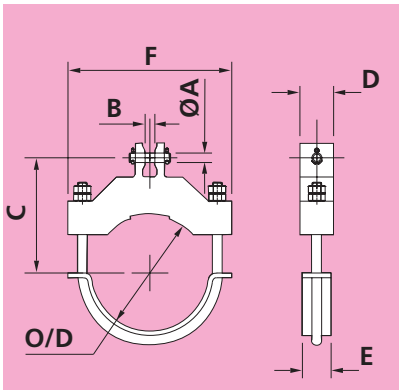

Type 513 Clamp

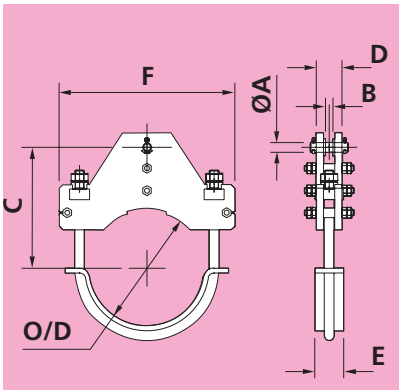

Type 514 Clamp

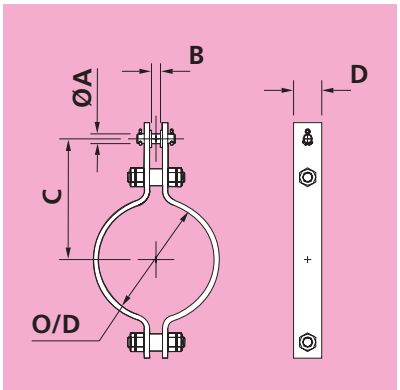

Type 515 Clamp

Fig. No.	Pipe O/D	Max. Pipe Temp	Max. Load			Dia. A	B	C		D	E	F	Clamp Weight		
	mm	°C	kgf	kN	lbs	mm	mm	mm	in	mm	mm	mm	kgf	N	lbs
513-800-1-400	812.8	400	423	4.15	933	10	9	534	21.02	35	20	864	57.8	567	127.5
514-800-1-400	812.8	400	423	4.15	933	10	9	534	21.02	56	20	910	13.7	135	30.3
515-800-1-400	812.8	400	423	4.15	933	10	9	530	20.87	60			13.9	136	30.7
513-800-2-400	812.8	400	985	9.66	2172	10	9	534	21.02	35	30	871	62.2	610	137.1
514-800-2-400	812.8	400	985	9.66	2172	10	9	534	21.02	59	30	920	15.9	156	35.1
515-800-2-400	812.8	400	985	9.66	2172	10	9	530	20.87	80			28.0	275	61.7
513-800-3-400	812.8	400	2125	20.8	4684	15	12	541	21.30	35	40	896	70.1	688	154.6
514-800-3-400	812.8	400	2125	20.8	4684	15	12	541	21.30	67	40	968	34.5	339	76.1
515-800-3-400	812.8	400	2125	20.8	4684	15	12	540	21.26	100			48.4	474	106.6
513-800-4-400	812.8	400	4293	42.1	9465	20	16	575	22.64	40	50	910	90.1	883	198.6
514-800-4-400	812.8	400	4293	42.1	9465	20	16	551	21.69	73	50	988	53.9	529	118.9
515-800-4-400	812.8	400	4293	42.1	9465	20	16	585	23.03	100			76.2	747	168.0
513-800-5-400	812.8	400	6324	62	13942	25	20	592	23.31	50	50	928	118.5	1162	261.2
514-800-5-400	812.8	400	6324	62	13942	25	20	557	21.93	79	50	1022	83.8	821	184.6
515-800-5-400	812.8	400	6324	62	13942	25	20	600	23.62	140			109.1	1070	240.6
514-800-6-400	812.8	400	12754	125	28117	35	25	583	22.95	86	80	1064	153.7	1507	338.8
515-800-6-400	812.8	400	12754	125	28117	35	25	660	25.98	170			190.3	1866	419.6
514-800-7-400	812.8	400	18132	178	39974	40	28	621	24.45	92	90	1086	197.2	1934	434.7
515-800-7-400	812.8	400	18132	178	39974	40	28	700	27.56	180			263.1	2580	580.1
514-800-8-400	812.8	400	25524	250	56269	50	35	626	24.65	110	100	1140	263.9	2588	581.7
515-800-8-400	812.8	400	25524	250	56269	50	35	705	27.76	220			322.7	3165	711.4
514-800-9-400	812.8	400	55135	541	121552	70	49	740	29.13	138	130	1204	497.0	4874	1095.8
514-800-10-400	812.8	400	70330	690	155050	80	55	802	31.57	156	150	1238	593.5	5820	1308.4
514-800-11-400	812.8	400	90785	890	200144	90	60	845	33.27	194	190	1316	751.2	7367	1656.2
513-800-1-490	812.8	490	423	4.15	933	10	9	534	21.02	35	20	864	57.8	567	127.5
514-800-1-490	812.8	490	423	4.15	933	10	9	534	21.02	56	20	910	13.8	135	30.3
515-800-1-490	812.8	490	423	4.15	933	10	9	530	20.87	60			13.7	135	30.3
513-800-2-490	812.8	490	985	9.66	2172	10	9	534	21.02	35	30	871	61.9	607	136.5
514-800-2-490	812.8	490	985	9.66	2172	10	9	534	21.02	59	30	920	15.9	156	35.1
515-800-2-490	812.8	490	985	9.66	2172	10	9	530	20.87	80			27.7	272	61.1
513-800-3-490	812.8	490	2125	20.8	4684	15	12	541	21.30	35	40	896	69.9	685	154.0
514-800-3-490	812.8	490	2125	20.8	4684	15	12	541	21.30	67	40	968	34.5	339	76.2
515-800-3-490	812.8	490	2125	20.8	4684	15	12	535	21.06	100			46.9	460	103.5
513-800-4-490	812.8	490	4293	42.1	9465	20	16	574	22.60	40	50	910	89.7	879	197.7
514-800-4-490	812.8	490	4293	42.1	9465	20	16	551	21.69	73	50	988	53.9	529	118.9
515-800-4-490	812.8	490	4293	42.1	9465	20	16	565	22.24	120			74.0	725	163.1
513-800-5-490	812.8	490	6324	62	13942	25	20	590	23.23	50	50	928	117.7	1154	259.5
514-800-5-490	812.8	490	6324	62	13942	25	20	557	21.93	79	50	1022	83.8	822	184.8
515-800-5-490	812.8	490	6324	62	13942	25	20	585	23.03	120			90.3	885	199.0
514-800-6-490	812.8	490	12754	125	28117	35	25	571	22.48	86	70	1054	153.1	1501	337.4
515-800-6-490	812.8	490	12754	125	28117	35	25	635	25.00	150			160.3	1572	353.4
514-800-7-490	812.8	490	18132	178	39974	40	28	585	23.03	92	80	1080	102.1	1001	225.0
515-800-7-490	812.8	490	18132	178	39974	40	28	650	25.59	220			239.6	2349	528.2
514-800-8-490	812.8	490	25524	250	56269	50	35	626	24.65	110	90	1128	239.9	2353	528.9
515-800-8-490	812.8	490	25524	250	56269	50	35	700	27.56	200			288.5	2830	636.1
514-800-9-490	812.8	490	55135	541	121552	70	49	731	28.78	138	130	1204	487.8	4784	1075.4
514-800-10-490	812.8	490	70330	690	155050	80	55	792	31.18	156	150	1238	580.4	5692	1279.6
514-800-11-490	812.8	490	90785	890	200144	90	60	837	32.95	194	170	1306	689.0	6757	1519.0

CLAMPS FOR RIGID STRUTS AND SNUBBERS N.B. 32" / 800mm

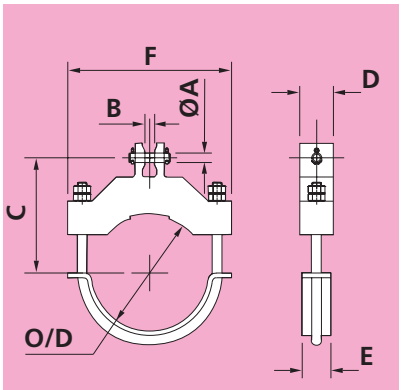

Type 513 Clamp

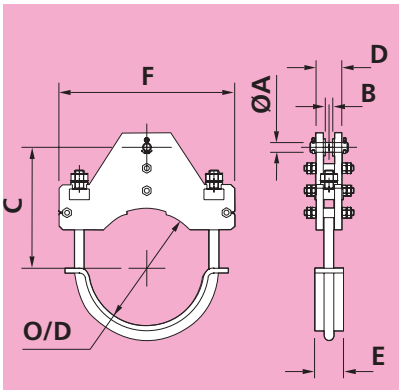

Type 514 Clamp

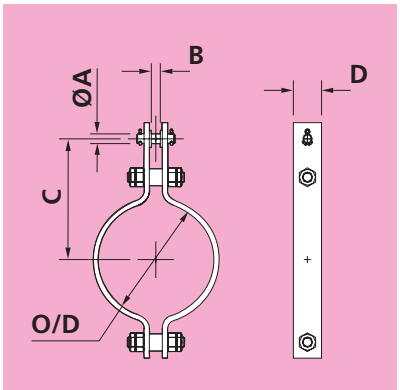

Type 515 Clamp

Fig. No.	Pipe O/D	Max. Pipe Temp	Max. Load			Dia. A	B	C		D	E	F	Clamp Weight		
	mm	°C	kgf	kN	lbs	mm	mm	mm	in	mm	mm	mm	kgf	N	lbs
513-800-1-530	812.8	530	423	4.15	933	10	9	534	21.02	35	30	871	59.6	584	131.4
514-800-1-530	812.8	530	423	4.15	933	10	9	534	21.02	56	30	912	15.0	147	33.1
515-800-1-530	812.8	530	423	4.15	933	10	9	530	20.87	70			19.2	189	42.4
513-800-2-530	812.8	530	985	9.66	2172	10	9	534	21.02	35	30	882	64.0	628	141.2
514-800-2-530	812.8	530	985	9.66	2172	10	9	534	21.02	59	30	926	21.5	211	47.4
515-800-2-530	812.8	530	985	9.66	2172	10	9	530	20.87	80			27.7	272	61.1
513-800-3-530	812.8	530	2125	20.8	4684	15	12	541	21.30	40	50	910	81.9	803	180.5
514-800-3-530	812.8	530	2125	20.8	4684	15	12	541	21.30	67	50	972	51.8	508	114.3
515-800-3-530	812.8	530	2125	20.8	4684	15	12	535	21.06	100			46.9	460	103.5
513-800-4-530	812.8	530	4293	42.1	9465	20	16	564	22.20	50	50	928	110.1	1080	242.8
514-800-4-530	812.8	530	4293	42.1	9465	20	16	550	21.65	73	50	996	90.2	885	198.9
515-800-4-530	812.8	530	4293	42.1	9465	20	16	575	22.64	100			74.6	731	164.4
513-800-5-530	812.8	530	6324	62	13942	25	20	581	22.87	60	70	949	142.5	1397	314.1
514-800-5-530	812.8	530	6324	62	13942	25	20	557	21.93	79	70	1028	125.6	1232	276.9
515-800-5-530	812.8	530	6324	62	13942	25	20	585	23.03	140			105.2	1031	231.8
514-800-6-530	812.8	530	12754	125	28117	35	25	583	22.95	86	80	1064	112.0	1099	247.0
515-800-6-530	812.8	530	12754	125	28117	35	25	635	25.00	170			181.3	1778	399.7
514-800-7-530	812.8	530	18132	178	39974	40	28	621	24.45	102	90	1086	143.2	1404	315.6
515-800-7-530	812.8	530	18132	178	39974	40	28	675	26.57	180			250.3	2455	551.8
514-800-8-530	812.8	530	25524	250	56269	50	35	626	24.65	110	100	1140	264.3	2592	582.7
515-800-8-530	812.8	530	25524	250	56269	50	35	700	27.56	220			316.7	3105	698.1
514-800-9-530	812.8	530	55135	541	121552	70	49	731	28.78	138	130	1204	491.2	4817	1083.0
514-800-10-530	812.8	530	70330	690	155050	80	55	792	31.18	156	150	1238	580.4	5692	1279.6
514-800-11-530	812.8	530	90785	890	200144	90	60	837	32.95	194	170	1306	689.0	6757	1519.0
513-800-1-570	812.8	570	423	4.15	933	10	9	534	21.02	35	30	882	62.0	608	136.8
514-800-1-570	812.8	570	423	4.15	933	10	9	534	21.02	56	30	918	16.8	164	36.9
515-800-1-570	812.8	570	423	4	933	10	9	530	20.87	80			22.0	215.3	48.4
513-800-2-570	812.8	570	985	9.66	2172	10	9	534	21.02	35	40	896	67.6	663	149.0
514-800-2-570	812.8	570	985	9.66	2172	10	9	534	21.02	59	40	930	36.8	361	81.2
515-800-2-570	812.8	570	985	10	2172	10	9	530	20.87	100			46.3	454	102.1
513-800-3-570	812.8	570	2125	20.8	4684	15	12	541	21.30	50	50	928	103.8	1018	228.8
514-800-3-570	812.8	570	2125	20.8	4684	15	12	541	21.30	67	50	980	86.5	848	190.7
515-800-3-570	812.8	570	2125	21	4684	15	12	540	21.26	90			53.2	521.8	117.3
513-800-4-570	812.8	570	4293	42.1	9465	20	16	563	22.17	60	70	949	136.7	1341	301.4
514-800-4-570	812.8	570	4293	42.1	9465	20	16	551	21.69	73	70	1002	131.2	1287	289.3
515-800-4-570	812.8	570	4293	42	9465	20	16	575	22.64	130			96.7	948.2	213.2
513-800-5-570	812.8	570	6324	62	13942	25	20	580	22.83	70	80	974	172.3	1690	379.9
514-800-5-570	812.8	570	6324	62	13942	25	20	578	22.76	79	80	1038	159.9	1568	352.5
515-800-5-570	812.8	570	6324	62	13942	25	20	605	23.82	120			122.1	1197	269.1
514-800-6-570	812.8	570	12754	125	28117	35	25	619	24.37	96	90	1070	119.0	1167	262.3
515-800-6-570	812.8	570	12754	125	28117	35	25	635	25	210			223.3	2190	492.3
514-800-7-570	812.8	570	18132	178	39974	40	28	621	24.45	102	100	1098	222.5	2182	490.6
515-800-7-570	812.8	570	18132	178	39974	40	28	675	26.57	190			264.0	2589	581.9
514-800-8-570	812.8	570	25524	250	56269	50	35	662	26.06	110	120	1148	276.3	2710	609.2
515-800-8-570	812.8	570	25524	250	56269	50	35	700	27.56	270			387.0	3795	853.2
514-800-9-570	812.8	570	55135	541	121552	70	49	759	29.88	138	130	1204	507.6	4978	1119.0
514-800-10-570	812.8	570	70330	690	155050	80	55	813	32.01	156	150	1238	598.0	5865	1318.4
514-800-11-570	812.8	570	90785	890	200144	90	60	850	33.46	194	170	1306	703.5	6899	1551.0

CLAMPS FOR RIGID STRUTS AND SNUBBERS N.B. 34" / 850mm

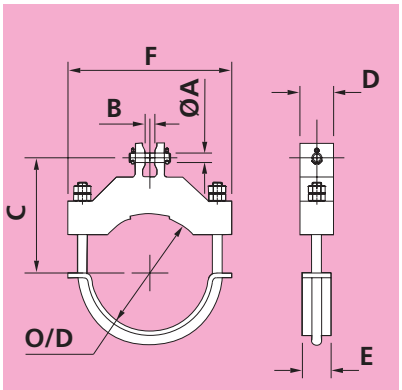

Type 513 Clamp

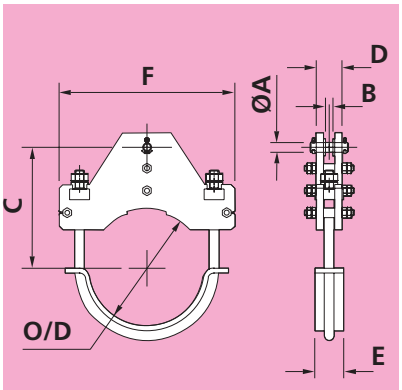

Type 514 Clamp

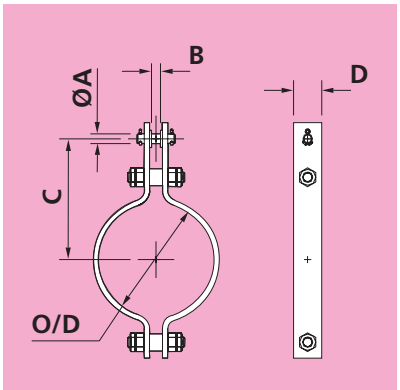

Type 515 Clamp

Fig. No.	Pipe O/D	Max. Pipe Temp	Max. Load			Dia. A	B	C		D	E	F	Clamp Weight		
	mm	°C	kgf	kN	lbs	mm	mm	mm	in	mm	mm	mm	kgf	N	lbs
513-850-1-400	863.6	400	423	4.15	933	10	9	559	22.01	35	20	914	64.5	633	142.3
514-850-1-400	863.6	400	423	4.15	933	10	9	559	22.01	56	20	960	16.0	157	35.3
515-850-1-400	863.6	400	423	4.15	933	10	9	555	21.85	70			20.5	201	45.1
513-850-2-400	863.6	400	985	9.66	2172	10	9	559	22.01	35	30	921	68.8	674	151.6
514-850-2-400	863.6	400	985	9.66	2172	10	9	559	22.01	59	30	970	20.9	205	46.0
515-850-2-400	863.6	400	985	9.66	2172	10	9	555	21.85	80			29.5	289	65.0
513-850-3-400	863.6	400	2125	20.8	4684	15	12	566	22.28	35	40	946	77.4	759	170.5
514-850-3-400	863.6	400	2125	20.8	4684	15	12	566	22.28	67	40	1018	45.9	450	101.3
515-850-3-400	863.6	400	2125	20.8	4684	15	12	565	22.24	100			50.8	498	112.0
513-850-4-400	863.6	400	4293	42.1	9465	20	16	604	23.78	40	50	960	99.4	975	219.1
514-850-4-400	863.6	400	4293	42.1	9465	20	16	576	22.68	73	50	1038	71.0	697	156.6
515-850-4-400	863.6	400	4293	42.1	9465	20	16	610	24.02	100			79.9	783	176.1
513-850-5-400	863.6	400	6324	62	13942	25	20	620	24.41	50	50	978	130.6	1280	287.8
514-850-5-400	863.6	400	6324	62	13942	25	20	582	22.91	79	50	1072	104.6	1026	230.6
515-850-5-400	863.6	400	6324	62	13942	25	20	625	24.61	140			114.3	1121	252.0
514-850-6-400	863.6	400	12754	125	28117	35	25	608	23.94	86	80	1114	170.0	1668	374.9
515-850-6-400	863.6	400	12754	125	28117	35	25	685	26.97	170			198.6	1947	437.7
514-850-7-400	863.6	400	18132	178	39974	40	28	646	25.43	92	90	1136	209.6	2055	462.1
515-850-7-400	863.6	400	18132	178	39974	40	28	725	28.54	180			274.0	2687	604.1
514-850-8-400	863.6	400	25524	250	56269	50	35	651	25.63	110	100	1190	283.3	2779	624.6
515-850-8-400	863.6	400	25524	250	56269	50	35	745	29.33	230			360.3	3533	794.3
514-850-9-400	863.6	400	55135	541	121552	70	49	753	29.65	138	130	1254	535.0	5247	1179.6
514-850-10-400	863.6	400	70330	690	155050	80	55	817	32.17	156	150	1288	664.8	6520	1465.7
514-850-11-400	863.6	400	90785	890	200144	90	60	858	33.78	194	190	1366	825.5	8095	1819.8
513-850-1-490	863.6	490	423	4.15	933	10	9	559	22.01	35	20	914	64.5	633	142.3
514-850-1-490	863.6	490	423	4.15	933	10	9	559	22.01	56	20	960	16.0	157	35.3
515-850-1-490	863.6	490	423	4.15	933	10	9	555	21.85	60			14.5	142	31.9
513-850-2-490	863.6	490	985	9.66	2172	10	9	559	22.01	35	30	921	68.8	674	151.6
514-850-2-490	863.6	490	985	9.66	2172	10	9	559	22.01	59	30	970	20.9	205	46.1
515-850-2-490	863.6	490	985	9.66	2172	10	9	555	21.85	80			29.2	286	64.4
513-850-3-490	863.6	490	2125	20.8	4684	15	12	566	22.28	35	40	946	77.4	759	170.5
514-850-3-490	863.6	490	2125	20.8	4684	15	12	566	22.28	67	40	1018	45.9	451	101.3
515-850-3-490	863.6	490	2125	20.8	4684	15	12	560	22.05	100			49.9	489	110.0
513-850-4-490	863.6	490	4293	42.1	9465	20	16	602	23.70	40	50	960	98.8	969	217.8
514-850-4-490	863.6	490	4293	42.1	9465	20	16	576	22.68	73	50	1038	71.8	704	158.2
515-850-4-490	863.6	490	4293	42.1	9465	20	16	600	23.62	100			78.3	767	172.5
513-850-5-490	863.6	490	6324	62	13942	25	20	619	24.37	50	50	978	130.0	1275	286.6
514-850-5-490	863.6	490	6324	62	13942	25	20	582	22.91	79	50	1072	104.7	1026	230.7
515-850-5-490	863.6	490	6324	62	13942	25	20	615	24.21	130			104.2	1021	229.6
514-850-6-490	863.6	490	12754	125	28117	35	25	596	23.46	86	70	1104	165.8	1626	365.4
515-850-6-490	863.6	490	12754	125	28117	35	25	665	26.18	160			179.6	1761	395.9
514-850-7-490	863.6	490	18132	178	39974	40	28	610	24.02	92	80	1130	106.1	1041	234.0
515-850-7-490	863.6	490	18132	178	39974	40	28	700	27.56	180			261.2	2561	575.8
514-850-8-490	863.6	490	25524	250	56269	50	35	651	25.63	110	90	1178	261.3	2563	576.2
515-850-8-490	863.6	490	25524	250	56269	50	35	725	28.54	210			315.3	3092	695.1
514-850-9-490	863.6	490	55135	541	121552	70	49	743	29.25	138	130	1254	528.3	5181	1164.7
514-850-10-490	863.6	490	70330	690	155050	80	55	805	31.69	156	150	1288	655.4	6427	1444.9
514-850-11-490	863.6	490	90785	890	200144	90	60	893	35.16	184	170	1356	749.5	7350	1652.2

CLAMPS FOR RIGID STRUTS AND SNUBBERS N.B. 34" / 850mm

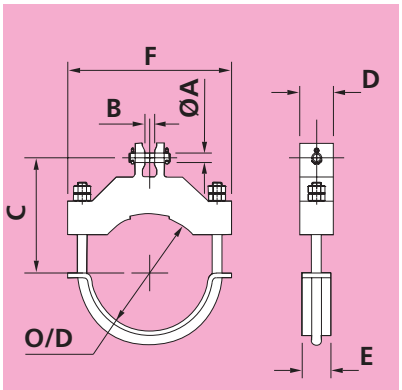

Type 513 Clamp

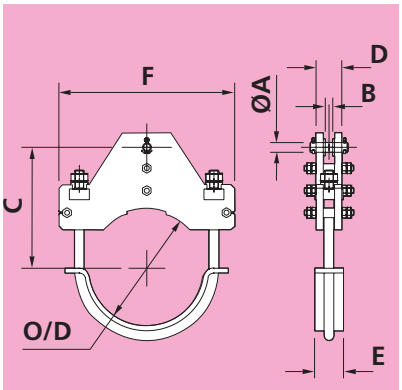

Type 514 Clamp

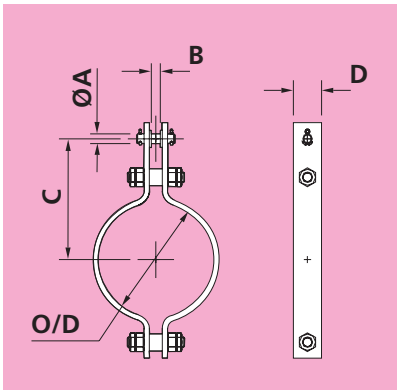

Type 515 Clamp

Fig. No.	Pipe O/D	Max. Pipe Temp	Max. Load			Dia. A	B	C		D	E	F	Clamp Weight		
	mm	°C	kgf	kN	lbs	mm	mm	mm	in	mm	mm	mm	kgf	N	lbs
513-850-1-530	863.6	530	423	4.15	933	10	9	559	22.01	35	30	921	66.1	648	145.6
514-850-1-530	863.6	530	423	4.15	933	10	9	559	22.01	56	30	962	17.3	170	38.2
515-850-1-530	863.6	530	423	4.15	933	10	9	555	21.85	70			20.3	199	44.7
513-850-2-530	863.6	530	985	9.66	2172	10	9	559	22.01	35	30	932	70.7	693	155.9
514-850-2-530	863.6	530	985	9.66	2172	10	9	559	22.01	59	30	976	29.7	291	65.5
515-850-2-530	863.6	530	985	9.66	2172	10	9	555	21.85	80			29.2	286	64.4
513-850-3-530	863.6	530	2125	20.8	4684	15	12	566	22.28	40	50	960	90.2	885	198.9
514-850-3-530	863.6	530	2125	20.8	4684	15	12	566	22.28	67	50	1022	67.0	657	147.7
515-850-3-530	863.6	530	2125	20.8	4684	15	12	560	22.05	110			54.8	538	120.9
513-850-4-530	863.6	530	4293	42.1	9465	20	16	592	23.31	50	50	978	121.9	1195	268.6
514-850-4-530	863.6	530	4293	42.1	9465	20	16	575	22.64	73	50	1046	109.0	1069	240.2
515-850-4-530	863.6	530	4293	42.1	9465	20	16	600	23.62	100			78.3	767	172.5
513-850-5-530	863.6	530	6324	62	13942	25	20	609	23.98	60	70	999	156.6	1536	345.2
514-850-5-530	863.6	530	6324	62	13942	25	20	582	22.91	79	70	1078	144.7	1419	318.9
515-850-5-530	863.6	530	6324	62	13942	25	20	615	24.21	160			127.8	1254	281.8
514-850-6-530	863.6	530	12754	125	28117	35	25	608	23.94	86	80	1114	117.6	1153	259.2
515-850-6-530	863.6	530	12754	125	28117	35	25	665	26.18	180			201.7	1978	444.6
514-850-7-530	863.6	530	18132	178	39974	40	28	646	25.43	92	90	1136	217.0	2128	478.3
515-850-7-530	863.6	530	18132	178	39974	40	28	700	27.56	180			261.2	2561	575.8
514-850-8-530	863.6	530	25524	250	56269	50	35	651	25.63	110	100	1190	283.8	2783	625.6
515-850-8-530	863.6	530	25524	250	56269	50	35	725	28.54	230			344.7	3380	759.8
514-850-9-530	863.6	530	55135	541	121552	70	49	744	29.29	138	130	1254	529.2	5190	1166.8
514-850-10-530	863.6	530	70330	690	155050	80	55	805	31.69	156	150	1288	655.4	6427	1444.9
514-850-11-530	863.6	530	90785	890	200144	90	60	893	35.16	184	170	1356	749.5	7350	1652.2
513-850-1-570	863.6	570	423	4.15	933	10	9	559	22.01	35	30	932	68.6	673	151.3
514-850-1-570	863.6	570	423	4.15	933	10	9	559	22.01	56	30	968	19.2	188	42.2
515-850-1-570	863.6	570	423	4	933	10	9	555	21.85	80			23.2	227	51.0
513-850-2-570	863.6	570	985	9.66	2172	10	9	559	22.01	35	40	946	74.4	730	164.1
514-850-2-570	863.6	570	985	9.66	2172	10	9	559	22.01	59	40	980	50.0	490	110.2
515-850-2-570	863.6	570	985	10	2172	10	9	555	21.85	100			48.7	478	107.5
513-850-3-570	863.6	570	2125	20.8	4684	15	12	566	22.28	50	50	978	113.9	1117	251.1
514-850-3-570	863.6	570	2125	20.8	4684	15	12	566	22.28	67	50	1030	104.3	1023	230.0
515-850-3-570	863.6	570	2125	21	4684	15	12	565	22.24	100			62.1	609.5	137.0
513-850-4-570	863.6	570	4293	42.1	9465	20	16	590	23.23	60	70	999	150.3	1474	331.3
514-850-4-570	863.6	570	4293	42.1	9465	20	16	576	22.68	73	70	1052	146.1	1433	322.2
515-850-4-570	863.6	570	4293	42	9465	20	16	600	23.62	140			109.2	1071	240.8
513-850-5-570	863.6	570	6324	62	13942	25	20	608	23.94	70	80	1024	188.9	1852	416.5
514-850-5-570	863.6	570	6324	62	13942	25	20	603	23.74	79	80	1088	172.9	1696	381.2
515-850-5-570	863.6	570	6324	62	13942	25	20	630	24.8	120			127.9	1255	282.1
514-850-6-570	863.6	570	12754	125	28117	35	25	644	25.35	86	90	1120	227.2	2228	500.9
515-850-6-570	863.6	570	12754	125	28117	35	25	685	26.97	180			255.3	2504	562.9
514-850-7-570	863.6	570	18132	178	39974	40	28	646	25.43	102	100	1148	247.1	2423	544.8
515-850-7-570	863.6	570	18132	178	39974	40	28	700	27.56	200			289.7	2841	638.8
514-850-8-570	863.6	570	25524	250	56269	50	35	687	27.05	110	120	1198	300.5	2947	662.5
515-850-8-570	863.6	570	25524	250	56269	50	35	725	28.54	280			418.0	4100	921.6
514-850-9-570	863.6	570	55135	541	121552	70	49	771	30.35	138	130	1254	549.1	5385	1210.6
514-850-10-570	863.6	570	70330	690	155050	80	55	826	32.52	156	150	1288	678.5	6654	1495.9
514-850-11-570	863.6	570	90785	890	200144	90	60	863	33.98	194	170	1356	776.2	7612	1711.2

CLAMPS FOR RIGID STRUTS AND SNUBBERS N.B. 36" / 900mm

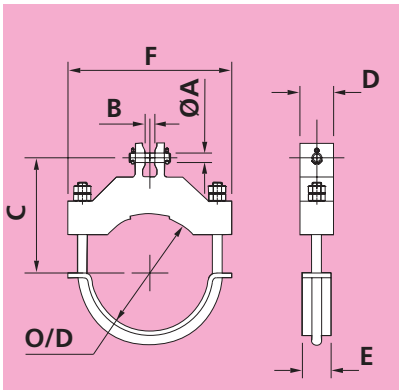

Type 513 Clamp

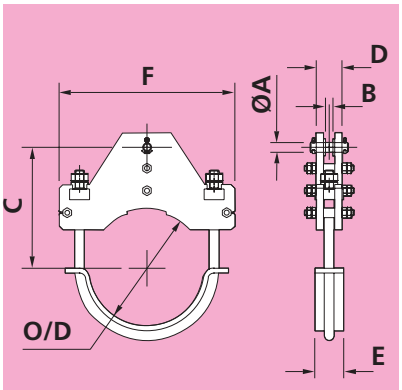

Type 514 Clamp

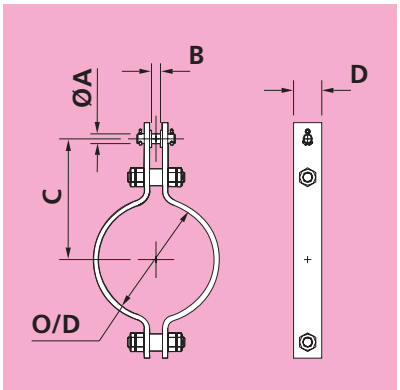

Type 515 Clamp

Fig. No.	Pipe O/D	Max. Pipe Temp	Max. Load			Dia. A	B	C		D	E	F	Clamp Weight		
	mm	°C	kgf	kN	lbs	mm	mm	mm	in	mm	mm	mm	kgf	N	lbs
513-900-1-400	914.4	400	423	4.15	933	10	9	585	23.03	40	20	966	80.6	791	177.8
514-900-1-400	914.4	400	423	4.15	933	10	9	585	23.03	56	20	1012	20.5	201	45.2
515-900-1-400	914.4	400	423	4.15	933	10	9	580	22.83	70			21.5	211	47.4
513-900-2-400	914.4	400	985	9.66	2172	10	9	585	23.03	40	30	973	85.5	839	188.5
514-900-2-400	914.4	400	985	9.66	2172	10	9	585	23.03	59	30	1022	29.3	288	64.7
515-900-2-400	914.4	400	985	9.66	2172	10	9	580	22.83	80			31.0	304	68.3
513-900-3-400	914.4	400	2125	20.8	4684	15	12	592	23.31	40	40	998	95.0	931	209.3
514-900-3-400	914.4	400	2125	20.8	4684	15	12	592	23.31	67	40	1070	63.0	617	138.8
515-900-3-400	914.4	400	2125	20.8	4684	15	12	595	23.43	100			53.6	526	118.2
513-900-4-400	914.4	400	4293	42.1	9465	20	16	633	24.92	40	50	1012	109.3	1072	240.9
514-900-4-400	914.4	400	4293	42.1	9465	20	16	602	23.70	73	50	1090	88.8	871	195.8
515-900-4-400	914.4	400	4293	42.1	9465	20	16	635	25.00	100			83.6	820	184.3
513-900-5-400	914.4	400	6324	62	13942	25	20	650	25.59	50	50	1030	143.4	1406	316.2
514-900-5-400	914.4	400	6324	62	13942	25	20	608	23.94	79	50	1124	123.9	1215	273.1
515-900-5-400	914.4	400	6324	62	13942	25	20	655	25.79	150			128.6	1261	283.5
514-900-6-400	914.4	400	12754	125	28117	35	25	634	24.96	86	80	1166	186.4	1828	411.0
515-900-6-400	914.4	400	12754	125	28117	35	25	715	28.15	180			220.0	2157	485.0
514-900-7-400	914.4	400	18132	178	39974	40	28	672	26.46	92	90	1188	222.5	2182	490.5
515-900-7-400	914.4	400	18132	178	39974	40	28	750	29.53	180			285.2	2797	628.7
514-900-8-400	914.4	400	25524	250	56269	50	35	677	26.65	110	100	1242	302.6	2968	667.1
515-900-8-400	914.4	400	25524	250	56269	50	35	775	30.51	250			407.9	4000	899.2
514-900-9-400	914.4	400	55135	541	121552	70	49	768	30.24	138	130	1306	547.2	5366	1206.4
514-900-10-400	914.4	400	70330	690	155050	80	55	829	32.64	156	150	1340	719.8	7058	1586.8
514-900-11-400	914.4	400	90785	890	200144	90	60	916	36.06	184	190	1418	913.1	8955	2013.1
513-900-1-490	914.4	490	423	4.15	933	10	9	585	23.03	40	20	966	80.6	791	177.8
514-900-1-490	914.4	490	423	4.15	933	10	9	585	23.03	56	20	1012	20.5	201	45.3
515-900-1-490	914.4	490	423	4.15	933	10	9	580	22.83	60			15.2	149	33.6
513-900-2-490	914.4	490	985	9.66	2172	10	9	585	23.03	40	30	973	85.5	839	188.5
514-900-2-490	914.4	490	985	9.66	2172	10	9	585	23.03	59	30	1022	29.4	288	64.7
515-900-2-490	914.4	490	985	9.66	2172	10	9	580	22.83	80			30.8	302	67.8
513-900-3-490	914.4	490	2125	20.8	4684	15	12	592	23.31	40	40	998	95.0	931	209.3
514-900-3-490	914.4	490	2125	20.8	4684	15	12	592	23.31	67	40	1070	63.0	618	138.8
515-900-3-490	914.4	490	2125	20.8	4684	15	12	590	23.23	100			52.7	517	116.2
513-900-4-490	914.4	490	4293	42.1	9465	20	16	631	24.84	40	50	1012	108.7	1066	239.5
514-900-4-490	914.4	490	4293	42.1	9465	20	16	602	23.70	73	50	1090	88.8	871	195.8
515-900-4-490	914.4	490	4293	42.1	9465	20	16	625	24.61	100			82.0	804	180.7
513-900-5-490	914.4	490	6324	62	13942	25	20	648	25.51	50	50	1030	142.6	1399	314.4
514-900-5-490	914.4	490	6324	62	13942	25	20	608	23.94	79	50	1124	123.9	1215	273.2
515-900-5-490	914.4	490	6324	62	13942	25	20	640	25.20	140			117.3	1150	258.5
514-900-6-490	914.4	490	12754	125	28117	35	25	622	24.49	86	70	1156	178.6	1751	393.7
515-900-6-490	914.4	490	12754	125	28117	35	25	690	27.17	160			187.5	1839	413.4
514-900-7-490	914.4	490	18132	178	39974	40	28	636	25.04	92	80	1182	109.9	1078	242.3
515-900-7-490	914.4	490	18132	178	39974	40	28	725	28.54	180			272.4	2671	600.5
514-900-8-490	914.4	490	25524	250	56269	50	35	677	26.65	110	90	1230	281.3	2759	620.2
515-900-8-490	914.4	490	25524	250	56269	50	35	750	29.53	220			343.5	3368	757.2
514-900-9-490	914.4	490	55135	541	121552	70	49	756	29.76	138	130	1306	535.5	5252	1180.7
514-900-10-490	914.4	490	70330	690	155050	80	55	818	32.20	156	150	1340	711.1	6973	1567.7
514-900-11-490	914.4	490	90785	890	200144	90	60	907	35.71	184	170	1408	838.8	8226	1849.3

CLAMPS FOR RIGID STRUTS AND SNUBBERS N.B. 36" / 900mm

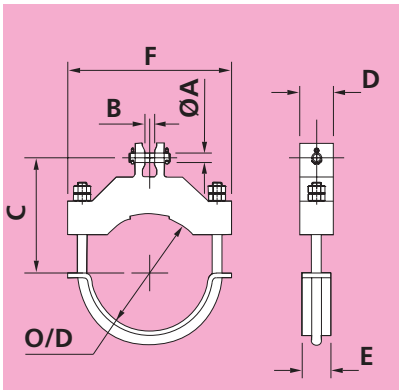

Type 513 Clamp

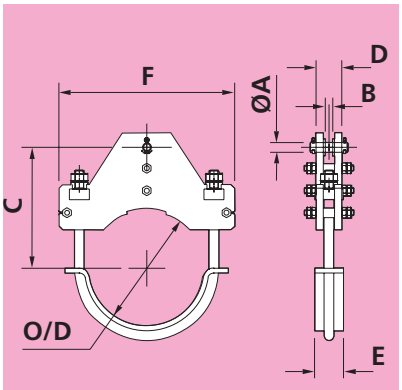

Type 514 Clamp

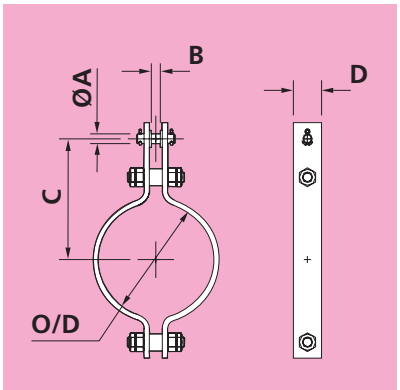

Type 515 Clamp

Fig. No.	Pipe O/D	Max. Pipe Temp	Max. Load			Dia. A	B	C		D	E	F	Clamp Weight		
	mm	°C	kgf	kN	lbs	mm	mm	mm	in	mm	mm	mm	kgf	N	lbs
513-900-1-530	914.4	530	423	4.15	933	10	9	585	23.03	40	30	973	82.6	810	182.2
514-900-1-530	914.4	530	423	4.15	933	10	9	585	23.03	56	30	1014	21.9	215	48.4
515-900-1-530	914.4	530	423	4.15	933	10	9	580	22.83	70			21.3	209	47.0
513-900-2-530	914.4	530	985	9.66	2172	10	9	585	23.03	40	30	984	87.7	860	193.2
514-900-2-530	914.4	530	985	9.66	2172	10	9	585	23.03	59	30	1028	41.0	402	90.5
515-900-2-530	914.4	530	985	9.66	2172	10	9	580	22.83	100			38.4	377	84.7
513-900-3-530	914.4	530	2125	20.8	4684	15	12	592	23.31	40	50	1012	98.9	970	218.1
514-900-3-530	914.4	530	2125	20.8	4684	15	12	592	23.31	67	50	1074	87.0	853	191.8
515-900-3-530	914.4	530	2125	20.8	4684	15	12	600	23.62	90			59.6	585	131.5
513-900-4-530	914.4	530	4293	42.1	9465	20	16	621	24.45	50	50	1030	133.7	1311	294.7
514-900-4-530	914.4	530	4293	42.1	9465	20	16	601	23.66	73	50	1098	129.6	1271	285.7
515-900-4-530	914.4	530	4293	42.1	9465	20	16	625	24.61	110			90.1	884	198.6
513-900-5-530	914.4	530	6324	62	13942	25	20	638	25.12	60	70	1051	171.7	1684	378.6
514-900-5-530	914.4	530	6324	62	13942	25	20	608	23.94	79	70	1130	162.1	1590	357.4
515-900-5-530	914.4	530	6324	62	13942	25	20	640	25.20	160			133.8	1312	295.0
514-900-6-530	914.4	530	12754	125	28117	35	25	634	24.96	86	80	1166	122.0	1197	269.0
515-900-6-530	914.4	530	12754	125	28117	35	25	690	27.17	180			210.6	2065	464.3
514-900-7-530	914.4	530	18132	178	39974	40	28	672	26.46	92	90	1188	211.2	2071	465.6
515-900-7-530	914.4	530	18132	178	39974	40	28	725	28.54	180			272.4	2671	600.5
514-900-8-530	914.4	530	25524	250	56269	50	35	677	26.65	110	100	1242	303.1	2972	668.1
515-900-8-530	914.4	530	25524	250	56269	50	35	750	29.53	240			374.1	3668	824.6
514-900-9-530	914.4	530	55135	541	121552	70	49	758	29.84	138	130	1306	540.2	5297	1190.9
514-900-10-530	914.4	530	70330	690	155050	80	55	818	32.20	156	150	1340	711.1	6973	1567.7
514-900-11-530	914.4	530	90785	890	200144	90	60	907	35.71	184	170	1408	838.8	8226	1849.3
513-900-1-570	914.4	570	423	4.15	933	10	9	585	23.03	40	30	984	85.1	835	187.7
514-900-1-570	914.4	570	423	4.15	933	10	9	585	23.03	56	30	1020	25.4	249	56.1
515-900-1-570	914.4	570	423	4	933	10	9	580	22.83	80			24.3	238.7	53.7
513-900-2-570	914.4	570	985	9.66	2172	10	9	585	23.03	40	40	998	91.8	900	202.3
514-900-2-570	914.4	570	985	9.66	2172	10	9	585	23.03	59	40	1032	65.3	641	144.0
515-900-2-570	914.4	570	985	10	2172	10	9	580	22.83	100			51.3	502.7	113.0
513-900-3-570	914.4	570	2125	20.8	4684	15	12	592	23.31	50	50	1030	124.8	1224	275.2
514-900-3-570	914.4	570	2125	20.8	4684	15	12	592	23.31	67	50	1082	124.8	1223	275.0
515-900-3-570	914.4	570	2125	21	4684	15	12	590	23.23	100			65.3	639.9	143.9
513-900-4-570	914.4	570	4293	42.1	9465	20	16	619	24.37	60	70	1051	164.6	1614	362.9
514-900-4-570	914.4	570	4293	42.1	9465	20	16	602	23.70	73	70	1104	158.9	1559	350.4
515-900-4-570	914.4	570	4293	42	9465	20	16	625	24.61	140			114.4	1122	252.3
513-900-5-570	914.4	570	6324	62	13942	25	20	636	25.04	70	80	1076	206.1	2021	454.3
514-900-5-570	914.4	570	6324	62	13942	25	20	629	24.76	79	80	1140	186.2	1826	410.4
515-900-5-570	914.4	570	6324	62	13942	25	20	660	25.98	120			134.6	1320	296.7
514-900-6-570	914.4	570	12754	125	28117	35	25	670	26.38	86	90	1172	239.9	2353	529.0
515-900-6-570	914.4	570	12754	125	28117	35	25	710	27.95	180			266.5	2614	587.6
514-900-7-570	914.4	570	18132	178	39974	40	28	672	26.46	102	100	1200	269.5	2643	594.2
515-900-7-570	914.4	570	18132	178	39974	40	28	725	28.54	200			302.2	2963	666.1
514-900-8-570	914.4	570	25524	250	56269	50	35	713	28.07	110	120	1250	324.9	3187	716.4
515-900-8-570	914.4	570	25524	250	56269	50	35	750	29.53	290			450.5	4418	993.1
514-900-9-570	914.4	570	55135	541	121552	70	49	786	30.94	138	130	1306	561.8	5509	1238.5
514-900-10-570	914.4	570	70330	690	155050	80	55	841	33.11	156	150	1340	730.4	7163	1610.2
514-900-11-570	914.4	570	90785	890	200144	90	60	916	36.06	184	170	1408	856.0	8395	1887.2

CLAMPS FOR RIGID STRUTS AND SNUBBERS N.B. 38" / 950mm

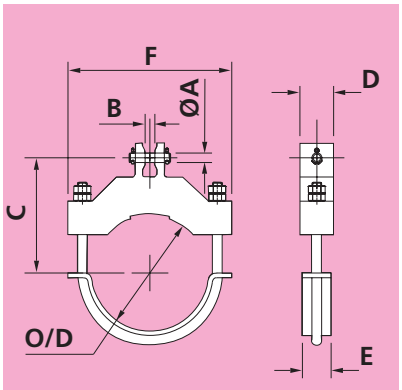

Type 513 Clamp

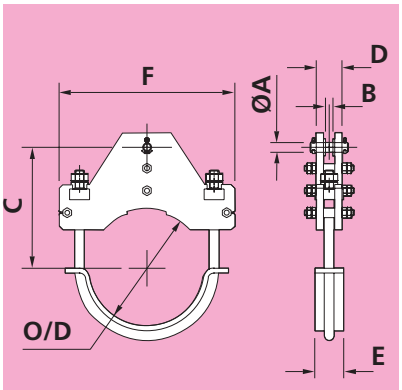

Type 514 Clamp

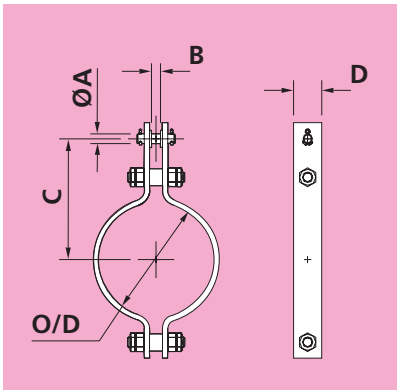

Type 515 Clamp

Fig. No.	Pipe O/D	Max. Pipe Temp	Max. Load			Dia. A	B	C		D	E	F	Clamp Weight		
	mm	°C	kgf	kN	lbs	mm	mm	mm	in	mm	mm	mm	kgf	N	lbs
513-950-1-400	965	400	423	4.15	933	10	9	611	24.06	40	20	1018	88.9	871	195.9
514-950-1-400	965	400	423	4.15	933	10	9	611	24.06	56	20	1064	29.2	286	64.3
515-950-1-400	965	400	423	4.15	933	10	9	605	23.82	70			22.6	221	49.8
513-950-2-400	965	400	985	9.66	2172	10	9	611	24.06	40	30	1025	94.3	925	207.9
514-950-2-400	965	400	985	9.66	2172	10	9	611	24.06	59	30	1074	40.7	399	89.8
515-950-2-400	965	400	985	9.66	2172	10	9	605	23.82	80			32.6	320	71.8
513-950-3-400	965	400	2125	20.8	4684	15	12	618	24.33	40	40	1050	104.2	1022	229.7
514-950-3-400	965	400	2125	20.8	4684	15	12	618	24.33	67	40	1122	80.1	786	176.6
515-950-3-400	965	400	2125	20.8	4684	15	12	620	24.41	110			61.7	605	135.9
513-950-4-400	965	400	4293	42.1	9465	20	16	663	26.10	40	50	1064	120.1	1178	264.8
514-950-4-400	965	400	4293	42.1	9465	20	16	628	24.72	73	50	1142	111.1	1089	244.9
515-950-4-400	965	400	4293	42.1	9465	20	16	665	26.18	100			87.8	861	193.5
513-950-5-400	965	400	6324	62	13942	25	20	680	26.77	50	50	1082	156.8	1538	345.8
514-950-5-400	965	400	6324	62	13942	25	20	634	24.96	79	50	1176	148.0	1451	326.3
515-950-5-400	965	400	6324	62	13942	25	20	680	26.77	150			134.2	1316	295.8
514-950-6-400	965	400	12754	125	28117	35	25	660	25.98	86	80	1218	204.5	2006	450.9
515-950-6-400	965	400	12754	125	28117	35	25	740	29.13	190			241.4	2367	532.1
514-950-7-400	965	400	18132	178	39974	40	28	698	27.48	102	90	1240	229.3	2249	505.5
515-950-7-400	965	400	18132	178	39974	40	28	780	30.71	180			297.6	2919	656.2
514-950-8-400	965	400	25524	250	56269	50	35	703	27.68	110	100	1294	282.5	2770	622.8
515-950-8-400	965	400	25524	250	56269	50	35	800	31.50	250			423.4	4152	933.4
514-950-9-400	965	400	55135	541	121552	70	49	780	30.71	138	130	1358	524.7	5145	1156.7
514-950-10-400	965	400	70330	690	155050	80	55	844	33.23	156	150	1392	744.4	7300	1641.1
514-950-11-400	965	400	90785	890	200144	90	60	931	36.65	184	190	1470	1010.3	9907	2227.2
513-950-1-490	965	490	423	4.15	933	10	9	611	24.06	40	20	1018	88.9	871	195.9
514-950-1-490	965	490	423	4.15	933	10	9	611	24.06	56	20	1064	29.2	286	64.4
515-950-1-490	965	490	423	4.15	933	10	9	605	23.82	70			22.4	220	49.5
513-950-2-490	965	490	985	9.66	2172	10	9	611	24.06	40	30	1025	94.3	925	207.9
514-950-2-490	965	490	985	9.66	2172	10	9	611	24.06	59	30	1074	40.8	400	89.8
515-950-2-490	965	490	985	9.66	2172	10	9	605	23.82	80			32.3	317	71.2
513-950-3-490	965	490	2125	20.8	4684	15	12	618	24.33	40	40	1050	104.2	1022	229.7
514-950-3-490	965	490	2125	20.8	4684	15	12	618	24.33	67	40	1122	80.1	786	176.6
515-950-3-490	965	490	2125	20.8	4684	15	12	615	24.21	100			55.2	541	121.7
513-950-4-490	965	490	4293	42.1	9465	20	16	661	26.02	40	50	1064	119.5	1172	263.4
514-950-4-490	965	490	4293	42.1	9465	20	16	628	24.72	73	50	1142	111.1	1089	244.9
515-950-4-490	965	490	4293	42.1	9465	20	16	655	25.79	100			86.2	845	190.0
513-950-5-490	965	490	6324	62	13942	25	20	678	26.69	50	50	1082	156.0	1530	343.9
514-950-5-490	965	490	6324	62	13942	25	20	634	24.96	79	50	1176	148.1	1452	326.5
515-950-5-490	965	490	6324	62	13942	25	20	670	26.38	150			131.8	1293	290.6
514-950-6-490	965	490	12754	125	28117	35	25	648	25.51	86	70	1208	191.3	1876	421.8
515-950-6-490	965	490	12754	125	28117	35	25	715	28.15	170			207.5	2035	457.5
514-950-7-490	965	490	18132	178	39974	40	28	662	26.06	92	80	1234	114.5	1123	252.5
515-950-7-490	965	490	18132	178	39974	40	28	750	29.53	180			283.4	2779	624.8
514-950-8-490	965	490	25524	250	56269	50	35	703	27.68	110	90	1282	263.3	2582	580.5
515-950-8-490	965	490	25524	250	56269	50	35	780	30.71	230			374.9	3676	826.4
514-950-9-490	965	490	55135	541	121552	70	49	772	30.39	138	130	1358	518.8	5088	1143.8
514-950-10-490	965	490	70330	690	155050	80	55	832	32.76	156	150	1392	734.5	7203	1619.3
514-950-11-490	965	490	90785	890	200144	90	60	922	36.30	184	170	1460	935.6	9175	2062.7

CLAMPS FOR RIGID STRUTS AND SNUBBERS N.B. 38" / 950mm

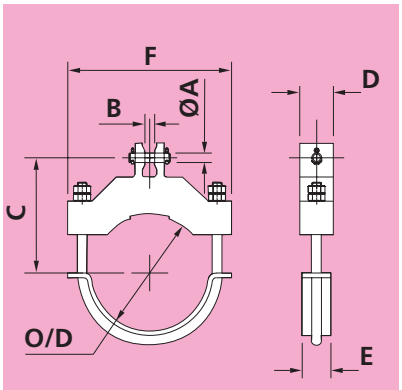

Type 513 Clamp

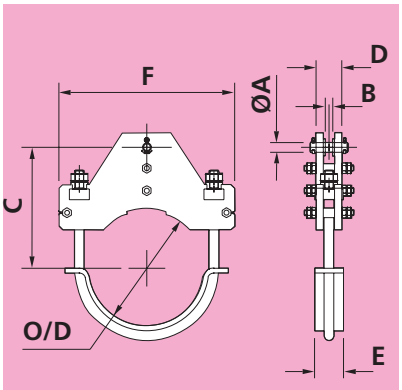

Type 514 Clamp

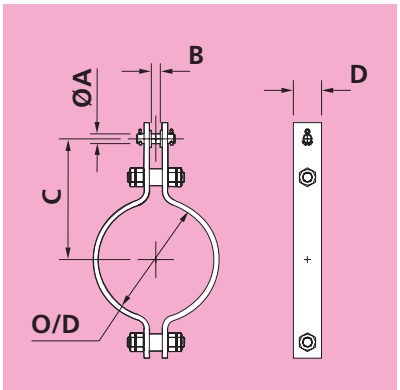

Type 515 Clamp

Fig. No.	Pipe O/D	Max. Pipe Temp	Max. Load			Dia. A	B	C		D	E	F	Clamp Weight		
	mm	°C	kgf	kN	lbs	mm	mm	mm	in	mm	mm	mm	kgf	N	lbs
513-950-1-530	965	530	423	4.15	933	10	9	611	24.06	40	30	1025	90.9	892	200.5
514-950-1-530	965	530	423	4.15	933	10	9	611	24.06	56	30	1066	30.7	301	67.6
515-950-1-530	965	530	423	4.15	933	10	9	605	23.82	70			22.4	220	49.5
513-950-2-530	965	530	985	9.66	2172	10	9	611	24.06	40	30	1036	96.6	947	212.9
514-950-2-530	965	530	985	9.66	2172	10	9	611	24.06	59	30	1080	55.5	545	122.5
515-950-2-530	965	530	985	9.66	2172	10	9	605	23.82	100			40.3	395	88.9
513-950-3-530	965	530	2125	20.8	4684	15	12	618	24.33	40	50	1064	108.3	1062	238.8
514-950-3-530	965	530	2125	20.8	4684	15	12	618	24.33	67	50	1126	105.9	1038	233.4
515-950-3-530	965	530	2125	20.8	4684	15	12	625	24.61	90			62.5	613	137.7
513-950-4-530	965	530	4293	42.1	9465	20	16	650	25.59	50	50	1082	146.4	1436	322.7
514-950-4-530	965	530	4293	42.1	9465	20	16	627	24.69	73	50	1150	150.1	1472	331.0
515-950-4-530	965	530	4293	42.1	9465	20	16	655	25.79	110			94.7	929	208.8
513-950-5-530	965	530	6324	62	13942	25	20	668	26.30	60	70	1103	187.7	1841	413.9
514-950-5-530	965	530	6324	62	13942	25	20	634	24.96	79	70	1182	178.2	1747	392.8
515-950-5-530	965	530	6324	62	13942	25	20	690	27.17	120			142.5	1397	314.1
514-950-6-530	965	530	12754	125	28117	35	25	660	25.98	86	80	1218	128.7	1262	283.7
515-950-6-530	965	530	12754	125	28117	35	25	715	28.15	190			231.6	2271	510.6
514-950-7-530	965	530	18132	178	39974	40	28	698	27.48	102	90	1240	229.9	2255	506.9
515-950-7-530	965	530	18132	178	39974	40	28	750	29.53	180			283.4	2779	624.8
514-950-8-530	965	530	25524	250	56269	50	35	726	28.58	110	100	1294	319.0	3129	703.3
515-950-8-530	965	530	25524	250	56269	50	35	780	30.71	250			406.8	3990	896.9
514-950-9-530	965	530	55135	541	121552	70	49	772	30.39	138	130	1358	517.5	5075	1140.8
514-950-10-530	965	530	70330	690	155050	80	55	832	32.76	156	150	1392	734.5	7203	1619.3
514-950-11-530	965	530	90785	890	200144	90	60	922	36.30	184	170	1460	935.6	9175	2062.7
513-950-1-570	965	570	423	4.15	933	10	9	611	24.06	40	30	1036	93.9	921	207.1
514-950-1-570	965	570	423	4.15	933	10	9	611	24.06	56	30	1072	34.9	342	77.0
515-950-1-570	965	570	423	4	933	10	9	605	23.82	80			32.0	313.9	70.6
513-950-2-570	965	570	985	9.66	2172	10	9	611	24.06	40	40	1050	100.9	989	222.4
514-950-2-570	965	570	985	9.66	2172	10	9	611	24.06	59	40	1084	85.6	839	188.7
515-950-2-570	965	570	985	10	2172	10	9	605	23.82	100			53.7	527.1	118.5
513-950-3-570	965	570	2125	20.8	4684	15	12	618	24.33	50	50	1082	136.6	1340	301.2
514-950-3-570	965	570	2125	20.8	4684	15	12	618	24.33	67	50	1134	145.0	1422	319.7
515-950-3-570	965	570	2125	21	4684	15	12	615	24.21	100			68.4	670.7	150.8
513-950-4-570	965	570	4293	42.1	9465	20	16	647	25.47	60	70	1103	179.9	1764	396.7
514-950-4-570	965	570	4293	42.1	9465	20	16	628	24.72	73	70	1156	168.9	1656	372.4
515-950-4-570	965	570	4293	42	9465	20	16	655	25.79	150			128.8	1263	284.0
513-950-5-570	965	570	6324	62	13942	25	20	665	26.18	70	80	1128	225.4	2210	496.9
514-950-5-570	965	570	6324	62	13942	25	20	655	25.79	79	80	1192	199.2	1953	439.1
515-950-5-570	965	570	6324	62	13942	25	20	685	26.97	120			140.5	1378	309.9
514-950-6-570	965	570	12754	125	28117	35	25	696	27.40	96	90	1224	197.1	1933	434.4
515-950-6-570	965	570	12754	125	28117	35	25	735	28.94	180			277.6	2722	611.9
514-950-7-570	965	570	18132	178	39974	40	28	718	28.27	102	100	1252	326.6	3202	719.9
515-950-7-570	965	570	18132	178	39974	40	28	750	29.53	200			314.4	3083	693.2
514-950-8-570	965	570	25524	250	56269	50	35	739	29.09	120	120	1302	287.9	2824	634.8
515-950-8-570	965	570	25524	250	56269	50	35	780	30.71	300			486.8	4774	1073.1
514-950-9-570	965	570	55135	541	121552	70	49	799	31.46	138	130	1358	540.2	5298	1191.0
514-950-10-570	965	570	70330	690	155050	80	55	855	33.66	156	150	1392	755.9	7413	1666.5
514-950-11-570	965	570	90785	890	200144	90	60	931	36.65	184	170	1460	952.2	9338	2099.3

CLAMPS FOR RIGID STRUTS AND SNUBBERS N.B. 40" / 1000mm

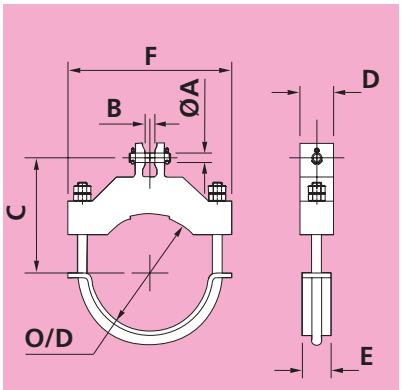

Type 513 Clamp

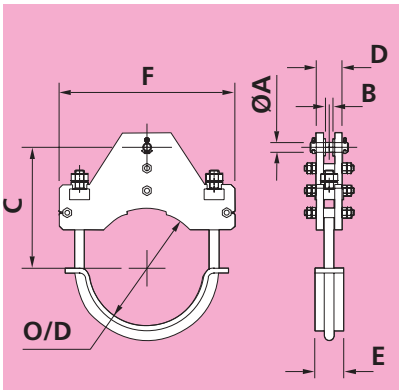

Type 514 Clamp

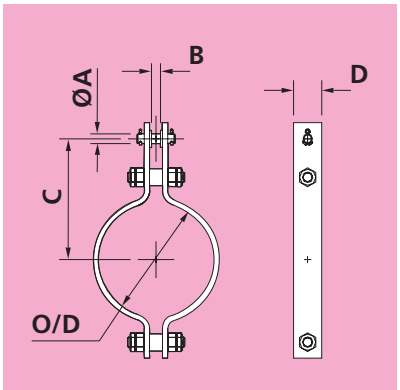

Type 515 Clamp

Fig. No.	Pipe O/D	Max. Pipe Temp	Max. Load			Dia. A	B	C		D	E	F	Clamp Weight		
	mm	°C	kgf	kN	lbs	mm	mm	mm	in	mm	mm	mm	kgf	N	lbs
513-1000-1-400	1016	400	423	4.15	933	10	9	636	25.04	45	20	1068	108.7	1066	239.7
514-1000-1-400	1016	400	423	4.15	933	10	9	636	25.04	66	20	1114	48.2	473	106.4
515-1000-1-400	1016	400	423	4.15	933	10	9	630	24.80	70			23.6	231	52.0
513-1000-2-400	1016	400	985	9.66	2172	10	9	636	25.04	45	30	1075	114.5	1123	252.5
514-1000-2-400	1016	400	985	9.66	2172	10	9	636	25.04	69	30	1124	57.4	563	126.6
515-1000-2-400	1016	400	985	9.66	2172	10	9	630	24.80	80			34.1	334	75.1
513-1000-3-400	1016	400	2125	20.8	4684	15	12	643	25.31	45	40	1100	125.5	1231	276.7
514-1000-3-400	1016	400	2125	20.8	4684	15	12	643	25.31	77	40	1172	103.2	1012	227.5
515-1000-3-400	1016	400	2125	20.8	4684	15	12	645	25.39	110			64.4	631	141.9
513-1000-4-400	1016	400	4293	42.1	9465	20	16	683	26.89	45	50	1114	142.1	1394	313.3
514-1000-4-400	1016	400	4293	42.1	9465	20	16	653	25.71	83	50	1192	137.1	1345	302.3
515-1000-4-400	1016	400	4293	42.1	9465	20	16	690	27.17	110			100.5	985	221.5
513-1000-5-400	1016	400	6324	62	13942	25	20	708	27.87	50	50	1132	170.3	1670	375.5
514-1000-5-400	1016	400	6324	62	13942	25	20	659	25.94	89	50	1226	178.4	1749	393.3
515-1000-5-400	1016	400	6324	62	13942	25	20	705	27.76	160			148.9	1460	328.2
514-1000-6-400	1016	400	12754	125	28117	35	25	685	26.97	96	80	1268	234.5	2300	517.0
515-1000-6-400	1016	400	12754	125	28117	35	25	765	30.12	190			250.6	2457	552.4
514-1000-7-400	1016	400	18132	178	39974	40	28	723	28.46	102	90	1290	253.6	2486	559.0
515-1000-7-400	1016	400	18132	178	39974	40	28	805	31.69	180			308.5	3026	680.2
514-1000-8-400	1016	400	25524	250	56269	50	35	728	28.66	110	100	1344	294.6	2889	649.4
515-1000-8-400	1016	400	25524	250	56269	50	35	825	32.48	260			455.6	4468	1004.4
514-1000-9-400	1016	400	55135	541	121552	70	49	797	31.38	138	130	1408	495.2	4857	1091.8
514-1000-10-400	1016	400	70330	690	155050	80	55	857	33.74	156	150	1442	732.4	7182	1614.7
514-1000-11-400	1016	400	90785	890	200144	90	60	944	37.17	184	190	1520	1086.5	10655	2395.4
513-1000-1-490	1016	490	423	4.15	933	10	9	636	25.04	45	20	1068	108.7	1066	239.7
514-1000-1-490	1016	490	423	4.15	933	10	9	636	25.04	66	20	1114	48.3	473	106.4
515-1000-1-490	1016	490	423	4.15	933	10	9	630	24.80	70			23.5	230	51.7
513-1000-2-490	1016	490	985	9.66	2172	10	9	636	25.04	45	30	1075	114.5	1123	252.5
514-1000-2-490	1016	490	985	9.66	2172	10	9	636	25.04	69	30	1124	57.4	563	126.6
515-1000-2-490	1016	490	985	9.66	2172	10	9	630	24.80	80			33.8	331	74.4
513-1000-3-490	1016	490	2125	20.8	4684	15	12	643	25.31	45	40	1100	125.1	1227	275.8
514-1000-3-490	1016	490	2125	20.8	4684	15	12	643	25.31	77	40	1172	103.2	1012	227.5
515-1000-3-490	1016	490	2125	20.8	4684	15	12	640	25.20	100			57.7	565	127.1
513-1000-4-490	1016	490	4293	42.1	9465	20	16	682	26.85	45	50	1114	141.6	1388	312.1
514-1000-4-490	1016	490	4293	42.1	9465	20	16	653	25.71	83	50	1192	137.1	1345	302.3
515-1000-4-490	1016	490	4293	42.1	9465	20	16	680	26.77	100			89.9	881	198.1
513-1000-5-490	1016	490	6324	62	13942	25	20	706	27.80	50	50	1132	169.5	1662	373.6
514-1000-5-490	1016	490	6324	62	13942	25	20	659	25.94	89	50	1226	178.5	1750	393.4
515-1000-5-490	1016	490	6324	62	13942	25	20	695	27.36	150			137.3	1347	302.8
514-1000-6-490	1016	490	12754	125	28117	35	25	673	26.50	96	70	1258	238.6	2339	525.9
515-1000-6-490	1016	490	12754	125	28117	35	25	740	29.13	170			215.7	2116	475.6
514-1000-7-490	1016	490	18132	178	39974	40	28	687	27.05	102	80	1284	260.5	2555	574.4
515-1000-7-490	1016	490	18132	178	39974	40	28	795	31.30	180			301.9	2960	665.5
514-1000-8-490	1016	490	25524	250	56269	50	35	728	28.66	110	90	1332	274.8	2695	605.9
515-1000-8-490	1016	490	25524	250	56269	50	35	805	31.69	240			405.4	3975	893.7
514-1000-9-490	1016	490	55135	541	121552	70	49	788	31.02	138	130	1408	481.5	4722	1061.5
514-1000-10-490	1016	490	70330	690	155050	80	55	845	33.27	156	150	1442	721.8	7079	1591.3
514-1000-11-490	1016	490	90785	890	200144	90	60	935	36.81	184	170	1510	1016.8	9971	2241.6

CLAMPS FOR RIGID STRUTS AND SNUBBERS N.B. 40" / 1000mm

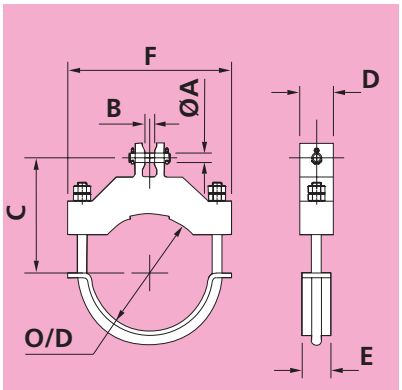

Type 513 Clamp

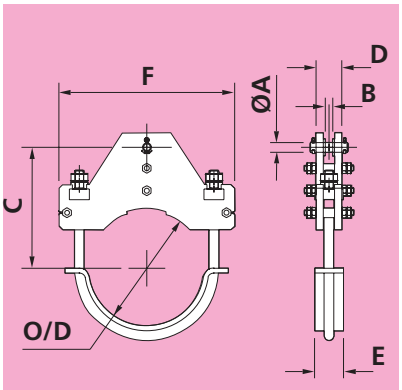

Type 514 Clamp

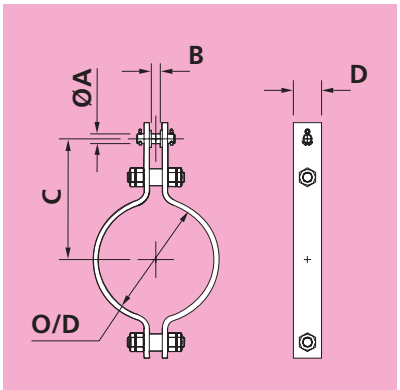

Type 515 Clamp

Fig. No.	Pipe O/D	Max. Pipe Temp	Max. Load			Dia. A	B	C		D	E	F	Clamp Weight		
	mm	°C	kgf	kN	lbs	mm	mm	mm	in	mm	mm	mm	kgf	N	lbs
513-1000-1-530	1016	530	423	4.15	933	10	9	636	25.04	45	30	1075	110.6	1084	243.8
514-1000-1-530	1016	530	423	4.15	933	10	9	636	25.04	66	30	1116	49.9	489	109.9
515-1000-1-530	1016	530	423	4.15	933	10	9	630	24.80	70			23.5	230	51.7
513-1000-2-530	1016	530	985	9.66	2172	10	9	636	25.04	45	30	1086	117.0	1147	257.9
514-1000-2-530	1016	530	985	9.66	2172	10	9	636	25.04	69	30	1130	76.1	747	167.9
515-1000-2-530	1016	530	985	9.66	2172	10	9	630	24.80	100			42.2	413	92.9
513-1000-3-530	1016	530	2125	20.8	4684	15	12	643	25.31	45	50	1114	129.5	1270	285.6
514-1000-3-530	1016	530	2125	20.8	4684	15	12	643	25.31	77	50	1176	131.6	1290	290.1
515-1000-3-530	1016	530	2125	20.8	4684	15	12	650	25.59	90			65.2	640	143.8
513-1000-4-530	1016	530	4293	42.1	9465	20	16	677	26.65	50	50	1132	159.3	1562	351.2
514-1000-4-530	1016	530	4293	42.1	9465	20	16	652	25.67	83	50	1200	186.4	1828	410.9
515-1000-4-530	1016	530	4293	42.1	9465	20	16	680	26.77	120			107.7	1056	237.3
513-1000-5-530	1016	530	6324	62	13942	25	20	695	27.36	60	70	1153	203.7	1997	449.0
514-1000-5-530	1016	530	6324	62	13942	25	20	659	25.94	89	70	1232	225.4	2211	497.0
515-1000-5-530	1016	530	6324	62	13942	25	20	715	28.15	120			148.4	1455	327.1
514-1000-6-530	1016	530	12754	125	28117	35	25	685	26.97	96	80	1268	269.4	2642	593.9
515-1000-6-530	1016	530	12754	125	28117	35	25	740	29.13	190			240.8	2361	530.8
514-1000-7-530	1016	530	18132	178	39974	40	28	723	28.46	102	90	1290	239.9	2352	528.8
515-1000-7-530	1016	530	18132	178	39974	40	28	795	31.30	190			318.3	3122	701.8
514-1000-8-530	1016	530	25524	250	56269	50	35	738	29.06	110	100	1344	364.0	3570	802.5
515-1000-8-530	1016	530	25524	250	56269	50	35	805	31.69	260			438.5	4301	966.8
514-1000-9-530	1016	530	55135	541	121552	70	49	790	31.10	138	130	1408	490.2	4807	1080.7
514-1000-10-530	1016	530	70330	690	155050	80	55	845	33.27	156	150	1442	721.8	7079	1591.3
514-1000-11-530	1016	530	90785	890	200144	90	60	935	36.81	184	170	1510	1016.8	9971	2241.6
513-1000-1-570	1016	570	423	4.15	933	10	9	636	25.04	45	30	1086	113.9	1117	251.1
514-1000-1-570	1016	570	423	4.15	933	10	9	636	25.04	66	30	1122	52.1	511	114.8
515-1000-1-570	1016	570	423	4	933	10	9	630	24.8	80			33.5	328.4	73.8
513-1000-2-570	1016	570	985	9.66	2172	10	9	636	25.04	45	40	1100	121.7	1193	268.2
514-1000-2-570	1016	570	985	9.66	2172	10	9	636	25.04	69	40	1134	107.3	1052	236.5
515-1000-2-570	1016	570	985	10	2172	10	9	630	24.8	100			56.2	551.1	123.9
513-1000-3-570	1016	570	2125	20.8	4684	15	12	643	25.31	50	50	1132	148.2	1453	326.6
514-1000-3-570	1016	570	2125	20.8	4684	15	12	643	25.31	77	50	1184	183.3	1798	404.2
515-1000-3-570	1016	570	2125	21	4684	15	12	650	25.59	110			79.6	780.9	175.6
513-1000-4-570	1016	570	4293	42.1	9465	20	16	674	26.54	60	70	1153	194.9	1911	429.7
514-1000-4-570	1016	570	4293	42.1	9465	20	16	653	25.71	83	70	1206	224.2	2198	494.2
515-1000-4-570	1016	570	4293	42	9465	20	16	680	26.77	160			143.3	1405	315.8
513-1000-5-570	1016	570	6324	62	13942	25	20	693	27.28	70	80	1178	243.9	2392	537.7
514-1000-5-570	1016	570	6324	62	13942	25	20	680	26.77	89	80	1242	252.0	2471	555.5
515-1000-5-570	1016	570	6324	62	13942	25	20	715	28.15	120			148.4	1455	327.1
514-1000-6-570	1016	570	12754	125	28117	35	25	721	28.39	96	90	1274	205.6	2016	453.2
515-1000-6-570	1016	570	12754	125	28117	35	25	765	30.12	180			289.9	2843	639.0
514-1000-7-570	1016	570	18132	178	39974	40	28	734	28.90	102	100	1302	313.9	3079	692.1
515-1000-7-570	1016	570	18132	178	39974	40	28	780	30.71	220			360.5	3535	794.7
514-1000-8-570	1016	570	25524	250	56269	50	35	764	30.08	120	120	1352	315.4	3093	695.3
515-1000-8-570	1016	570	25524	250	56269	50	35	805	31.69	310			521.5	5114	1149.7
514-1000-9-570	1016	570	55135	541	121552	70	49	811	31.93	138	130	1408	500.5	4909	1103.5
514-1000-10-570	1016	570	70330	690	155050	80	55	866	34.09	156	150	1442	736.1	7219	1622.8
514-1000-11-570	1016	570	90785	890	200144	90	60	946	37.24	184	170	1510	1025.6	10057	2260.9

INTRODUCTION

Pipe Supports Group has developed a range of cryogenic products to meet the varying requirements of both the Piping and the Pipe Supporting Engineers. Our solutions provide options that satisfy the need of both specialists; a means to transfer the forces generated within the pipe into the surrounding structure that will not compromise the integrity of the insulation system.

Pipe Supports Group has been designing and manufacturing pipe hangers, restraints and associated equipment since 1968. We became involved in the design and development of cryogenic pipe supports in 2001 and have been instrumental in the development of the corporate standards of several major EPC's.

We have worked closely with chemical specialists to develop a range of chemicals that enable us to produce rigid high density polyurethane in densities ranging from 100 to 600kg/m^3. The chemical is completely CFC and HCFC free and gives extremely low thermal conductivity combined with good compressive, flexural and tensile strength properties.

Our facility in India is equipped with 3 modern high-pressure foam injection machines each equipped with an isocyanate tank and two polyol tanks enabling us to switch between densities very quickly ensuring maximum production flexibility.

Isolation vs Insulation: This discussion depends on your perspective; from the Supporting point of view these materials act as isolators because they separate the steel or concrete structure of the pipe support from the extreme temperatures of the pipe.

Low temperature causes normal carbon steel to become brittle and steels to withstand very low temperatures are expensive and sometimes difficult to process.

Freezing water expands and can cause serious damage to concrete structures if the concrete is not protected.

The use of a non-metallic material as a thermal break eliminates these problems and allows us to design the structure of the hanger for ambient temperature conditions thereby resulting in a more economic solution.

From the process engineer's perspective the need to insulate the pipe from the ambient temperature is often paramount to the viability of the process; localised breakdown of the insulation system can result in very high cost and disruption to the process.

The plant engineer however requires isolation from cold temperatures for personal protection, minimisation of condensation and the avoidance of structural damage.

The following extract from a spreadsheet compares the insulation and isolation performance of HD PUF with both glass reinforced composites and Densified Wood.

COMPARISON OF PROPERTIES:

Basic Data					GRE			HD PUF			Densified Wood		
Design Surface Temp (°C)	Pipe O/D (do)	Insu'n Thickness	Insu'n O/D (dn)	Dn/do	Thermal Resistance (R)	Heat Transfer Rate (q)	Surface Temp. (T2)	Thermal Resistance (R)	Heat Transfer Rate (q)	Surface Temp. (T2)	Thermal Resistance (R)	Heat Transfer Rate (q)	Temp. (T2)
-190.0	26.9	50	126.9	4.717	0.15	-1378.63	1.76	0.71	-294.09	14.54	0.08	-2557.63	-12.12
-190.0	33.7	50	133.7	3.967	0.17	-1232.16	0.75	0.79	-263.95	14.30	0.09	-2275.55	-13.86
-190.0	42.4	50	142.4	3.358	0.19	-1107.76	-0.32	0.87	-238.35	14.06	0.10	-2036.14	-15.68
-190.0	48.3	50	148.3	3.070	0.20	-1046.78	-0.94	0.92	-225.81	13.91	0.11	-1918.83	-16.72
-190.0	60.3	50	160.3	2.658	0.22	-956.68	-1.99	1.00	-207.27	13.67	0.12	-1745.57	-18.48
-190.0	76.1	50	176.1	2.314	0.24	-878.25	-3.08	1.09	-191.15	13.41	0.13	-1594.83	-20.29
-190.0	88.9	50	188.9	2.125	0.25	-833.69	-3.80	1.14	-182.00	13.24	0.14	-1509.22	-21.46
-190.0	101.6	50	201.6	1.984	0.26	-799.79	-4.39	1.19	-175.03	13.10	0.14	-1444.12	-22.43
-190.0	114.3	50	214.3	1.875	0.27	-772.92	-4.90	1.23	-169.52	12.98	0.15	-1392.51	-23.26
-190.0	139.7	50	239.7	1.716	0.28	-732.94	-5.73	1.29	-161.31	12.78	0.16	-1315.76	-24.60
-190.0	168.3	50	268.3	1.594	0.30	-701.58	-6.45	1.34	-154.88	12.60	0.17	-1255.57	-25.76
-190.0	193.7	50	293.7	1.516	0.31	-681.08	-6.95	1.38	-150.68	12.48	0.17	-1216.24	-26.56
-190.0	219.1	50	319.1	1.456	0.31	-665.10	-7.37	1.41	-147.40	12.38	0.18	-1185.59	-27.23
-190.0	244.5	50	344.5	1.409	0.32	-652.29	-7.72	1.44	-144.78	12.29	0.18	-1161.02	-27.78
-190.0	273.0	50	373	1.366	0.32	-640.63	-8.05	1.46	-142.39	12.21	0.18	-1138.67	-28.30
-190.0	323.9	50	423.9	1.309	0.33	-624.72	-8.52	1.49	-139.14	12.09	0.19	-1108.16	-29.04
-190.0	355.6	50	455.6	1.281	0.34	-617.03	-8.76	1.51	-137.56	12.04	0.19	-1093.42	-29.41
-190.0	406.4	50	506.4	1.246	0.34	-607.13	-9.07	1.53	-135.54	11.96	0.19	-1074.43	-29.90
-190.0	457.0	50	557	1.219	0.35	-599.39	-9.32	1.55	-133.95	11.89	0.20	-1059.59	-30.30
-190.0	508.0	50	608	1.197	0.35	-593.10	-9.53	1.57	-132.67	11.84	0.20	-1047.55	-30.63
-190.0	610.0	50	710	1.164	0.36	-583.61	-9.86	1.59	-130.73	11.76	0.20	-1029.36	-31.13
-190.0	762.0	50	862	1.131	0.36	-574.09	-10.19	1.62	-128.78	11.68	0.21	-1011.12	-31.66
-190.0	914.0	50	1014	1.109	0.37	-567.68	-10.43	1.63	-127.47	11.62	0.21	-998.84	-32.02
-190.0	1016.0	50	1116	1.098	0.37	-564.44	-10.55	1.64	-126.81	11.59	0.21	-992.63	-32.20

From a purely thermal perspective it can be seen that the HD PUF is considerably better at insulating the pipe than either GRE or Densified Wood however mechanically HD PUF is not as strong as the other two materials.

The property that is not shown in the above table is the load carrying capacity; comparing GRE to HD PUF the allowable compressive load for GRE is approximately 7N/mm^2 whereas for HD PUF it is one-tenth that value at approximately 0.7N/mm^2. Densified Wood by comparison is capable of sustaining compressive stresses up to 58N/mm^2. Therefore it is clear that where good insulation is required and high loading is anticipated there has to be a compromise.

In highly loaded anchors and line stops it is often beneficial to incorporate a combination of both HD PUF and Densified Wood which allows acceptable insulation properties to be achieved and yet sustain very high loading.

The following photograph is of a line stop where the support has been fully fitted to a spool of pipe. This unit will be positioned and welded straight in to the main line pipe. Axial forces are transferred from the pipe via the flanges positioned each side of the insulation mouldings. The compressive force is transmitted through the PUF and is taken by a central flange welded to the inside of the cradle. The integrity of the insulation is maintained.

HIGH DENSITY POLYURETHANE SUPPORTS

Our High Density Polyurethane Supports utilise CFC free blowing agents in producing a moulded product with a very low isocyanurate index resulting in a virtually chloride-free composition.

Component parts are moulded to precise dimensions in sheet steel moulds manufactured to accurate tolerances. Cylindrical components are monolithically moulded in 180° segments in layers to match the line insulation system.

Where conditions permit, we can also manufacture monolithically moulded components with machined steps to match up to the line insulation system. The benefit of this construction is found in the reduced installation requirements and the avoidance of having to apply expensive mastics and adhesives in the field. It should however be noted that for LNG services it is generally necessary to have a minimum of two layers of HD PUF.

THERMAL AND MECHANICAL PROPERTIES OF HD PUF MATERIALS

Testing has been carried out independently to determine the thermal conductivity, the density and the compressive strength of the HD PUF materials. Thermal conductivity was determined in accordance with ASTM C177 while density and compressive strength were determined in accordance with ASTM D1621.

The thermal conductivity at -165°C and compressive strength of the material, at 20°C were measured as follows

Density kg/m³	Thermal Conductivity W/m.K	1% Compressive Modulus MPa	2% Compressive Modulus MPa	Ultimate Compressive Stress MPa	Recommended Design Stress MPa
160	0.0205	0.491	1.027	2.04	0.491
224	0.0267	0.8	1.8	4.44	0.8
320	0.0338	1.44	2.95	7.704	1.44
500	0.0372	3.15	6.69	15.54	3.15

DESIGN CONSIDERATIONS

Cryogenic pipe supports are required to perform three distinct functions -

- To support the pipe by restraining it against static and thermally generated forces.
- To isolate the pipe from the supporting structure.
- To maintain the thermal conditions within the pipe.

To carry out these functions effectively the support must combine strength with good thermal properties; high density polyurethane foam offers a good combination of both allowing for reasonably compact designs to be achieved.

Of primary importance is protection against the ingress of moisture, which if allowed to occur will cause a build up of ice around the pipe and a consequent break-down of the thermal insulation. Ultimately icing will lead to failure of the support.

Therefore consideration for providing a vapour seal, for layering of the insulation and for fit-up to line insulation must be given to ensure the thermal integrity of the support.

The table provides guidance for layering of the insulation material; it shall be confirmed with the insulation contractor in order to ensure compatibility between support and line insulation.

Where multi-layering is necessary, radial joints are staggered to avoid potential break-down of the vapour seal.

The vapour seal is provided by the correct selection and use of cryogenic adhesives, sealant mastics and the application of a proprietary vapour barrier of the following types —

Insulation Thickness (mm)	Layer Construction (mm)
25	25
30	30
40	40
50	50
60	30/30
70	30/40
80	40/40
90	50/40
100	50/50
110	50/60
120	30/40/50
130	30/50/50
140	40/50/50
150	50/50/50
160	50/60/50
170	50/70/50
180	50/80/50
190	50/90/50
200	50/100/50
210	50/50/60/50
220	50/50/70/50
230	50/50/80/50
240	50/50/90/50
250	50/50/100/50

Cryogenic Adhesive selected for the range of operating temperatures.

Sealant Mastic used to prevent ingress of moisture at joints and edges.

Foil vapour barrier, applied to the external surface of the insulation to provide primary resistance to moisture ingress.

All exposed surfaces of HD PUF where the high density skin has been removed are coated with sealant mastic to prevent damage by moisture ingress during the installation phase.

Protection of the vapour barrier is provided by the use of a suitable thin gauge steel or aluminium wrap.

Materials such as aluminium sheet 0.4-0.8mm thick, stainless steel sheet 0.6-0.8mm thick or various grades of coated carbon steel are suitable for this purpose and are usually dictated by the main insulation specification.

It is common practice for the layers of insulation in the lower half of the support to be factory bonded together. In order to ensure optimum 'fit-up' to pipe we use only a narrow strip of adhesive along the length of the PUF between each layer. This enables the multi-layered cradle to behave like a 'leaf-spring' and flex to accommodate any irregularities in both the pipe and cradle shape.

Please refer to the explanation of this further on in this text.

CRYOGENIC SUPPORTS

HD PUF is supplied in the following densities —

Pipe Size (NB)	Lower Cradle (kg/m³)	Upper Cradle (kg/m³) Resting type	Upper Cradle (kg/m³) Line Stops and Anchors
Up to 150	160 (Natural)	160	160
200 to 600	224 (Red)	160	224
Over 600	320 (Green)	160	320
Special Needs	500 (Natural)	500	500

The different densities are coloured to allow easy identification at site. Layers are stepped in length by a minimum of 25mm (not more than 60mm) both circumferentially and longitudinally to allow fit-up to line insulation.

With regard to load capacities of foam components, consideration must be given to all forces being exerted on the pipe support and the respective bearing areas of either the pipe/foam interface or the foam/clamp interface. The allowable design stresses suggested in the previous text have been used to generate the load capacity and thermal tables that follow.

For special supports, line stops and anchors we utilize ANSYS finite element analysis to help us provide the optimum solution.

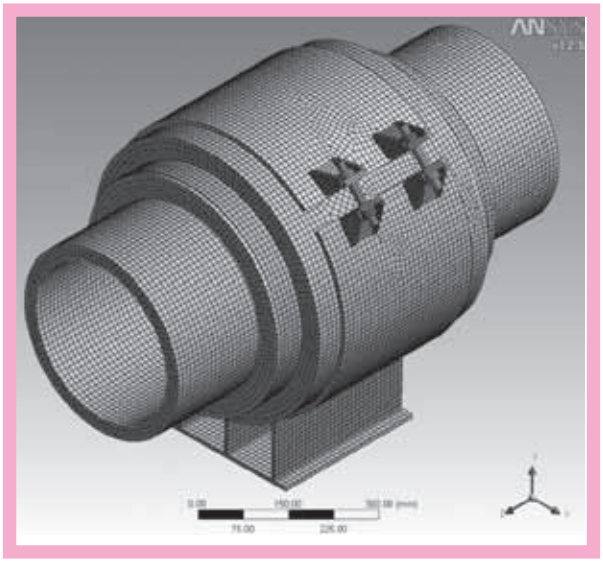

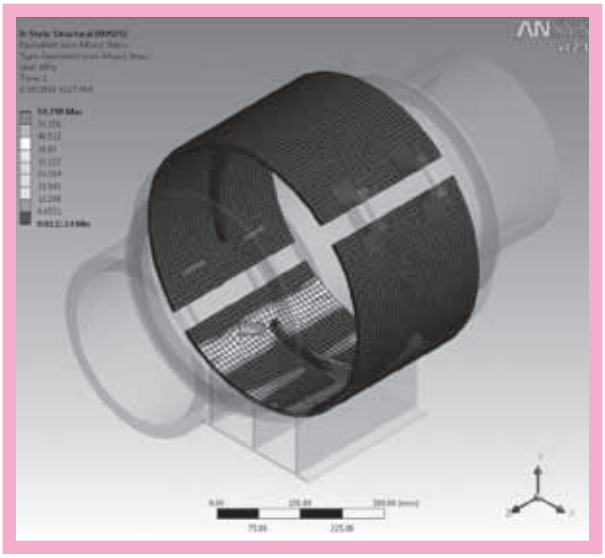

OUTSIDE DIAMETER OF INSULATION INSERTS

Insulation Thickness		25	30	40	50	60	70	80	90	100	110	120	130
Pipe O/D	No. Layers	1	1	1	1	2	2	2	2	2	2	3	3
21.3	15NB	71.3	81.3	101.3	121.3	141.3	161.3	181.3	201.3	221.3	241.3	261.3	281.3
26.9	20NB	76.9	86.9	106.9	126.9	146.9	166.9	186.9	206.9	226.9	246.9	266.9	286.9
33.7	25NB	83.7	93.7	113.7	133.7	153.7	173.7	193.7	213.7	233.7	253.7	273.7	293.7
42.4	32NB	92.4	102.4	122.4	142.4	162.4	182.4	202.4	222.4	242.4	262.4	282.4	302.4
48.3	40NB	98.3	108.3	128.3	148.3	168.3	188.3	208.3	228.3	248.3	268.3	288.3	308.3
60.3	50NB	110.3	120.3	140.3	160.3	180.3	200.3	220.3	240.3	260.3	280.3	300.3	320.3
76.1	65NB	126.1	136.1	156.1	176.1	196.1	216.1	236.1	256.1	276.1	296.1	316.1	336.1
88.9	80NB	138.9	148.9	168.9	188.9	208.9	228.9	248.9	268.9	288.9	308.9	328.9	348.9
114.3	100NB	164.3	174.3	194.3	214.3	234.3	254.3	274.3	294.3	314.3	334.3	354.3	374.3
139.7	125NB	189.7	199.7	219.7	239.7	259.7	279.7	299.7	319.7	339.7	359.7	379.7	399.7
168.3	150NB	218.3	228.3	248.3	268.3	288.3	308.3	328.3	348.3	368.3	388.3	408.3	428.3
193.7	175NB	243.7	253.7	273.7	293.7	313.7	333.7	353.7	373.7	393.7	413.7	433.7	453.7
219.1	200NB	269.1	279.1	299.1	319.1	339.1	359.1	379.1	399.1	419.1	439.1	459.1	479.1
244.5	225NB	294.5	304.5	324.5	344.5	364.5	384.5	404.5	424.5	444.5	464.5	484.5	504.5
273	250NB	323	333	353	373	393	413	433	453	473	493	513	533
323.9	300NB	373.9	383.9	403.9	423.9	443.9	463.9	483.9	503.9	523.9	543.9	563.9	583.9
355.6	350NB	405.6	415.6	435.6	455.6	475.6	495.6	515.6	535.6	555.6	575.6	595.6	615.6
406.4	400NB	456.4	466.4	486.4	506.4	526.4	546.4	566.4	586.4	606.4	626.4	646.4	666.4
457	450NB	507	517	537	557	577	597	617	637	657	677	697	717
508	500NB	558	568	588	608	628	648	668	688	708	728	748	768
559	550NB	609	619	639	659	679	699	719	739	759	779	799	819
610	600NB	660	670	690	710	730	750	770	790	810	830	850	870
660	650NB	710	720	740	760	780	800	820	840	860	880	900	920
711.2	700NB	761.2	771.2	791.2	811.2	831.2	851.2	871.2	891.2	911.2	931.2	951.2	971.2
762	750NB	812	822	842	862	882	902	922	942	962	982	1002	1022
813	800NB	863	873	893	913	933	953	973	993	1013	1033	1053	1073
864	850NB	914	924	944	964	984	1004	1024	1044	1064	1084	1104	1124
914	900NB	964	974	994	1014	1034	1054	1074	1094	1114	1134	1154	1174
965.2	950NB	1015	1025	1045	1065	1085	1105	1125	1145	1165	1185	1205	1225
1016	1000NB	1066	1076	1096	1116	1136	1156	1176	1196	1216	1236	1256	1276
1067	1050NB	1117	1127	1147	1167	1187	1207	1227	1247	1267	1287	1307	1327
1219	1200NB	1269	1279	1299	1319	1339	1359	1379	1399	1419	1439	1459	1479
1422	1400NB	1472	1482	1502	1522	1542	1562	1582	1602	1622	1642	1662	1682
1626	1600NB	1676	1686	1706	1726	1746	1766	1786	1806	1826	1846	1866	1886

NB. The inside diameter of the PUF insulation is moulded within the following limits –

(Pipe Outside Diameter x 101%) +3mm/-0mm

To compensate for gaps between pipe and PUF we provide a clearance at the longitudinal joint as follows —

Pipe O/D < 355.6mm	Clearance = 6mm
323.9 < Pipe O/D < 660mm	Clearance = 9mm
610 < Pipe O/D < 1016mm	Clearance = 12mm
Pipe O/D > 914mm	Clearance = 20mm

OUTSIDE DIAMETER OF INSULATION INSERTS:

Insulation Thickness		140	150	160	170	180	190	200	210	220	230	240	250
Pipe O/D	No. Layers	3	3	3	3	3	3	3	4	4	4	4	4
21.3	15NB	301.3	321.3	341.3	361.3	381.3	401.3	421.3	441.3	461.3	481.3	501.3	521.3
26.9	20NB	306.9	326.9	346.9	366.9	386.9	406.9	426.9	446.9	466.9	486.9	506.9	526.9
33.7	25NB	313.7	333.7	353.7	373.7	393.7	413.7	433.7	453.7	473.7	493.7	513.7	533.7
42.4	32NB	322.4	342.4	362.4	382.4	402.4	422.4	442.4	462.4	482.4	502.4	522.4	542.4
48.3	40NB	328.3	348.3	368.3	388.3	408.3	428.3	448.3	468.3	488.3	508.3	528.3	548.3
60.3	50NB	340.3	360.3	380.3	400.3	420.3	440.3	460.3	480.3	500.3	520.3	540.3	560.3
76.1	65NB	356.1	376.1	396.1	416.1	436.1	456.1	476.1	496.1	516.1	536.1	556.1	576.1
88.9	80NB	368.9	388.9	408.9	428.9	448.9	468.9	488.9	508.9	528.9	548.9	568.9	588.9
114.3	100NB	394.3	414.3	434.3	454.3	474.3	494.3	514.3	534.3	554.3	574.3	594.3	614.3
139.7	125NB	419.7	439.7	459.7	479.7	499.7	519.7	539.7	559.7	579.7	599.7	619.7	639.7
168.3	150NB	448.3	468.3	488.3	508.3	528.3	548.3	568.3	588.3	608.3	628.3	648.3	668.3
193.7	175NB	473.7	493.7	513.7	533.7	553.7	573.7	593.7	613.7	633.7	653.7	673.7	693.7
219.1	200NB	499.1	519.1	539.1	559.1	579.1	599.1	619.1	639.1	659.1	679.1	699.1	719.1
244.5	225NB	524.5	544.5	564.5	584.5	604.5	624.5	644.5	664.5	684.5	704.5	724.5	744.5
273	250NB	553	573	593	613	633	653	673	693	713	733	753	773
323.9	300NB	603.9	623.9	643.9	663.9	683.9	703.9	723.9	743.9	763.9	783.9	803.9	823.9
355.6	350NB	635.6	655.6	675.6	695.6	715.6	735.6	755.6	775.6	795.6	815.6	835.6	855.6
406.4	400NB	686.4	706.4	726.4	746.4	766.4	786.4	806.4	826.4	846.4	866.4	886.4	906.4
457	450NB	737	757	777	797	817	837	857	877	897	917	937	957
508	500NB	788	808	828	848	868	888	908	928	948	968	988	1008
559	550NB	839	859	879	899	919	939	959	979	999	1019	1039	1059
610	600NB	890	910	930	950	970	990	1010	1030	1050	1070	1090	1110
660	650NB	940	960	980	1000	1020	1040	1060	1080	1100	1120	1140	1160
711.2	700NB	991.2	1011	1031	1051	1071	1091	1111	1131	1151	1171	1191	1211
762	750NB	1042	1062	1082	1102	1122	1142	1162	1182	1202	1222	1242	1262
813	800NB	1093	1113	1133	1153	1173	1193	1213	1233	1253	1273	1293	1313
864	850NB	1144	1164	1184	1204	1224	1244	1264	1284	1304	1324	1344	1364
914	900NB	1194	1214	1234	1254	1274	1294	1314	1334	1354	1374	1394	1414
965.2	950NB	1245	1265	1285	1305	1325	1345	1365	1385	1405	1425	1465	1485
1016	1000NB	1296	1316	1336	1356	1376	1396	1416	1436	1456	1476	1496	1516
1067	1050NB	1347	1367	1387	1407	1427	1447	1467	1487	1507	1527	1547	1567
1219	1200NB	1499	1519	1539	1559	1579	1599	1619	1639	1659	1679	1699	1719
1422	1400NB	1702	1722	1742	1762	1782	1802	1822	1842	1862	1882	1902	1922
1626	1600NB	1906	1926	1946	1966	1986	2006	2026	2046	2066	2086	2106	2126

NB. The inside diameter of the PUF insulation is moulded within the following limits –

(Pipe Outside Diameter x 101%) +3mm/-0mm

To compensate for gaps between pipe and PUF we provide a clearance at the longitudinal joint as follows —

Pipe O/D < 355.6mm	Clearance = 6mm
323.9 < Pipe O/D < 660mm	Clearance = 9mm
610 < Pipe O/D < 1016mm	Clearance = 12mm
Pipe O/D > 914mm	Clearance = 20mm

INSULATION THICKNESS SELECTION CHARTS

Insul. Thick	25	30	40	50	60	70	80	90	100	110	120	130
Pipe O/D (do)	T_2 (°C)	T_2 (°C)	T_2 (°C)	T_2 (°C)	T_2 (°C)	T_2 (°C)	T_2 (°C)	T_2 (°C)	T_2 (°C)	T_2 (°C)	T_2 (°C)	T_2 (°C)
26.9	9.76	11.41	13.40	14.54	15.26	15.75	16.10	16.37	16.58	16.74	16.87	16.98
33.7	9.28	11.01	13.10	14.30	15.07	15.59	15.97	16.26	16.48	16.65	16.80	16.92
42.4	8.79	10.59	12.79	14.06	14.87	15.43	15.83	16.14	16.37	16.56	16.71	16.84
48.3	8.53	10.36	12.61	13.91	14.75	15.33	15.75	16.06	16.31	16.50	16.66	16.79
60.3	8.09	9.98	12.31	13.67	14.55	15.16	15.60	15.93	16.19	16.40	16.57	16.71
76.1	7.65	9.59	12.00	13.41	14.33	14.97	15.44	15.79	16.07	16.29	16.47	16.62
88.9	7.38	9.35	11.79	13.24	14.19	14.85	15.33	15.70	15.98	16.21	16.40	16.56
101.6	7.17	9.15	11.63	13.10	14.06	14.74	15.23	15.61	15.91	16.15	16.34	16.50
114.3	6.99	8.98	11.49	12.98	13.96	14.65	15.15	15.54	15.84	16.09	16.28	16.45
139.7	6.70	8.72	11.26	12.78	13.78	14.49	15.01	15.41	15.73	15.98	16.19	16.36
168.3	6.47	8.50	11.06	12.60	13.63	14.35	14.89	15.30	15.62	15.89	16.10	16.28
193.7	6.31	8.34	10.92	12.48	13.51	14.25	14.79	15.21	15.55	15.81	16.04	16.22
219.1	6.18	8.22	10.81	12.38	13.42	14.16	14.72	15.14	15.48	15.75	15.98	16.17
244.5	6.07	8.12	10.72	12.29	13.34	14.09	14.65	15.08	15.42	15.70	15.93	16.12
273.0	5.97	8.02	10.63	12.21	13.27	14.02	14.59	15.02	15.37	15.65	15.88	16.07
323.9	5.84	7.89	10.50	12.09	13.16	13.92	14.49	14.93	15.28	15.57	15.81	16.00
355.6	5.77	7.82	10.44	12.04	13.10	13.87	14.44	14.89	15.24	15.53	15.77	15.97
406.4	5.68	7.74	10.36	11.96	13.03	13.80	14.38	14.82	15.18	15.47	15.71	15.92
457.0	5.61	7.67	10.29	11.89	12.97	13.74	14.32	14.77	15.13	15.43	15.67	15.87
508.0	5.56	7.61	10.24	11.84	12.92	13.70	14.28	14.73	15.09	15.39	15.63	15.84
610.0	5.47	7.53	10.15	11.76	12.84	13.62	14.20	14.66	15.02	15.32	15.57	15.78
762.0	5.38	7.44	10.07	11.68	12.76	13.54	14.13	14.59	14.95	15.25	15.50	15.71
914.0	5.32	7.38	10.01	11.62	12.70	13.48	14.07	14.53	14.90	15.20	15.45	15.67
965.2	5.30	7.36	9.99	11.60	12.69	13.47	14.06	14.52	14.89	15.19	15.44	15.65
1016.0	5.29	7.34	9.98	11.59	12.67	13.46	14.05	14.51	14.87	15.18	15.43	15.64
1066.8	5.28	7.33	9.96	11.57	12.66	13.44	14.03	14.49	14.86	15.17	15.42	15.63
1219.2	5.24	7.30	9.93	11.54	12.63	13.41	14.00	14.46	14.83	15.14	15.39	15.60
1422.4	5.21	7.26	9.89	11.51	12.59	13.38	13.97	14.43	14.80	15.11	15.36	15.57
1625.6	5.18	7.24	9.87	11.48	12.57	13.35	13.94	14.41	14.78	15.08	15.34	15.55

Ambient Temperature T_m = 18°C, Fluid Temperature = -190°C, Medium Emissivity (f = 8W/m^{2}K)
Wind Velocity = 3m/second

The above data is applicable to cylindrical insulation and is based upon the following formulae

Thermal Resistance R(m^{2}K/W) $= d_o/(f.d_n)+\{(d_o/k).\ln(d_n/d_o)\times10^{-3}\}$

Rate of Heat Transfer q(W/m^2) $= (T_1-T_m).R$

Surface Temperature T_2(°C) $= T_m+\{q.d_o/(f.d_n)\}$

Where
- d_o = Pipe O/Dia.
- d_n = Insulation O/Dia.
- T_1 = Pipe Temperature.
- T_m = The ambient temperature of the air.
- T_2 = Surface temperature of the insulation.

INSULATION THICKNESS SELECTION CHARTS

Insul. Thick	140	150	160	170	180	190	200	210	220	230	240	250
Pipe O/D (do)	T_2 (°C)	T_2 (°C)	T_2 (°C)	T_2 (°C)	T_2 (°C)	T_2 (°C)	T_2 (°C)	T_2 (°C)	T_2 (°C)	T_2 (°C)	T_2 (°C)	T_2 (°C)
26.9	17.08	17.15	17.22	17.28	17.33	17.37	17.41	17.45	17.48	17.51	17.54	17.56
33.7	17.01	17.10	17.17	17.23	17.29	17.33	17.38	17.41	17.45	17.48	17.51	17.53
42.4	16.95	17.04	17.11	17.18	17.24	17.29	17.33	17.37	17.41	17.44	17.47	17.50
48.3	16.90	17.00	17.08	17.15	17.21	17.26	17.31	17.35	17.39	17.42	17.45	17.48
60.3	16.83	16.93	17.01	17.09	17.15	17.21	17.26	17.31	17.35	17.38	17.42	17.45
76.1	16.75	16.85	16.94	17.02	17.09	17.15	17.21	17.26	17.30	17.34	17.38	17.41
88.9	16.69	16.80	16.89	16.98	17.05	17.11	17.17	17.22	17.27	17.31	17.35	17.38
101.6	16.64	16.75	16.85	16.94	17.01	17.08	17.14	17.19	17.24	17.28	17.32	17.35
114.3	16.59	16.71	16.81	16.90	16.98	17.05	17.11	17.16	17.21	17.25	17.29	17.33
139.7	16.51	16.63	16.74	16.83	16.92	16.99	17.05	17.11	17.16	17.21	17.25	17.29
168.3	16.43	16.56	16.68	16.77	16.86	16.93	17.00	17.06	17.12	17.17	17.21	17.25
193.7	16.38	16.51	16.63	16.73	16.81	16.89	16.96	17.02	17.08	17.13	17.18	17.22
219.1	16.33	16.46	16.58	16.68	16.78	16.86	16.93	16.99	17.05	17.10	17.15	17.19
244.5	16.28	16.42	16.54	16.65	16.74	16.82	16.90	16.96	17.02	17.07	17.12	17.17
273.0	16.24	16.38	16.50	16.61	16.71	16.79	16.86	16.93	16.99	17.05	17.10	17.14
323.9	16.17	16.32	16.44	16.55	16.65	16.74	16.82	16.89	16.95	17.00	17.06	17.10
355.6	16.14	16.29	16.41	16.53	16.62	16.71	16.79	16.86	16.92	16.98	17.03	17.08
406.4	16.09	16.24	16.37	16.48	16.58	16.67	16.75	16.82	16.89	16.95	17.00	17.05
457.0	16.05	16.20	16.33	16.45	16.55	16.64	16.72	16.79	16.86	16.92	16.97	17.02
508.0	16.01	16.17	16.30	16.42	16.52	16.61	16.69	16.77	16.83	16.90	16.95	17.00
610.0	15.96	16.11	16.25	16.37	16.47	16.56	16.65	16.72	16.79	16.85	16.91	16.96
762.0	15.90	16.05	16.19	16.31	16.42	16.51	16.60	16.67	16.74	16.81	16.86	16.92
914.0	15.85	16.01	16.14	16.27	16.37	16.47	16.56	16.63	16.71	16.77	16.83	16.88
965.2	15.84	15.99	16.13	16.25	16.36	16.46	16.55	16.62	16.69	16.76	16.82	16.87
1016.0	15.83	15.98	16.12	16.24	16.35	16.45	16.54	16.61	16.68	16.75	16.81	16.86
1066.8	15.81	15.97	16.11	16.23	16.34	16.44	16.53	16.60	16.68	16.74	16.80	16.86
1219.2	15.79	15.95	16.09	16.21	16.32	16.41	16.50	16.58	16.65	16.72	16.78	16.83
1422.4	15.76	15.92	16.06	16.18	16.29	16.39	16.48	16.56	16.63	16.69	16.75	16.81
1625.6	15.74	15.90	16.04	16.16	16.27	16.37	16.46	16.54	16.61	16.67	16.74	16.79

Ambient Temperature T_m = 18°C, Fluid Temperature = -190°C, Medium Emissivity (f = 8W/m^{2}K)
Wind Velocity = 3m/second

Surface Coefficient (f W/m^{2}K) is dependent upon the emissivity of the outer surface of the insulation and can be approximated as follows —

Wind Speed	Still Air	3m/sec	10m/sec
Low Emissivity — Bright metal, polished aluminium.	5.7	15.5	36
Medium Emissivity — Zinc / aluminium coated or galvanised steel.	8	18	38
High Emissivity — Matt black surfaces, plastic coated metals.	10	20	40

The above data is applicable to cylindrical insulation and is based upon the following formulae

Thermal Resistance R(m^{2}K/W) $= d_o/(f.d_n)+\{(d_o/k).\ln(d_n/d_o)\times10^{-3}\}$

Rate of Heat Transfer q(W/m^2) $= (T_1-T_m).R$

Surface Temperature T_2(°C) $= T_m+\{q.d_o/(f.d_n)\}$

Where
d_o = Pipe O/Dia.
d_n = Insulation O/Dia.
T_1 = Pipe Temperature.
T_m = The ambient temperature of the air.
T_2 = Surface temperature of the insulation.

INSULATION THICKNESS SELECTION CHARTS

Insul. Thick	25	30	40	50	60	70	80	90	100	110	120	130
Pipe O/D (do)	T_2 (°C)	T_2 (°C)	T_2 (°C)	T_2 (°C)	T_2 (°C)	T_2 (°C)	T_2 (°C)	T_2 (°C)	T_2 (°C)	T_2 (°C)	T_2 (°C)	T_2 (°C)
26.9	15.76	17.22	19.27	20.44	21.18	21.68	22.05	22.32	22.54	22.70	22.84	22.95
33.7	15.28	16.81	18.96	20.20	20.98	21.52	21.91	22.21	22.44	22.62	22.76	22.88
42.4	14.79	16.38	18.64	19.94	20.78	21.35	21.77	22.08	22.33	22.52	22.68	22.81
48.3	14.53	16.14	18.46	19.80	20.66	21.25	21.68	22.01	22.26	22.46	22.62	22.76
60.3	14.09	15.75	18.14	19.54	20.45	21.07	21.53	21.87	22.14	22.36	22.53	22.67
76.1	13.65	15.35	17.82	19.28	20.22	20.88	21.36	21.73	22.01	22.24	22.43	22.58
88.9	13.38	15.10	17.62	19.10	20.08	20.75	21.25	21.63	21.93	22.16	22.35	22.52
101.6	13.17	14.89	17.44	18.96	19.95	20.64	21.16	21.54	21.85	22.09	22.29	22.46
114.3	12.99	14.72	17.30	18.83	19.84	20.55	21.07	21.47	21.78	22.03	22.24	22.41
139.7	12.70	14.45	17.06	18.63	19.66	20.39	20.93	21.34	21.66	21.92	22.14	22.32
168.3	12.47	14.22	16.86	18.45	19.50	20.24	20.80	21.22	21.56	21.82	22.05	22.23
193.7	12.31	14.06	16.72	18.32	19.39	20.14	20.70	21.13	21.48	21.75	21.98	22.17
219.1	12.18	13.94	16.60	18.21	19.29	20.05	20.62	21.06	21.41	21.69	21.92	22.11
244.5	12.07	13.83	16.51	18.13	19.21	19.98	20.55	21.00	21.35	21.63	21.87	22.07
273.0	11.97	13.73	16.42	18.04	19.13	19.91	20.49	20.94	21.29	21.58	21.82	22.02
323.9	11.84	13.60	16.29	17.92	19.02	19.80	20.39	20.84	21.21	21.50	21.74	21.95
355.6	11.77	13.53	16.22	17.86	18.96	19.75	20.34	20.80	21.16	21.46	21.70	21.91
406.4	11.68	13.44	16.14	17.78	18.89	19.68	20.27	20.73	21.10	21.40	21.65	21.86
457.0	11.61	13.37	16.07	17.72	18.83	19.62	20.22	20.68	21.05	21.35	21.60	21.81
508.0	11.56	13.31	16.01	17.66	18.77	19.57	20.17	20.64	21.01	21.31	21.56	21.78
610.0	11.47	13.22	15.93	17.58	18.69	19.49	20.10	20.56	20.94	21.25	21.50	21.72
762.0	11.38	13.13	15.84	17.49	18.61	19.41	20.02	20.49	20.87	21.17	21.43	21.65
914.0	11.32	13.07	15.78	17.43	18.55	19.35	19.96	20.43	20.81	21.12	21.38	21.60
965.2	11.30	13.05	15.76	17.42	18.53	19.34	19.95	20.42	20.80	21.11	21.37	21.59
1016.0	11.29	13.04	15.74	17.40	18.52	19.32	19.93	20.40	20.78	21.10	21.35	21.57
1066.8	11.28	13.02	15.73	17.39	18.51	19.31	19.92	20.39	20.77	21.08	21.34	21.56
1219.2	11.24	12.99	15.70	17.35	18.47	19.28	19.89	20.36	20.74	21.05	21.31	21.53
1422.4	11.21	12.95	15.66	17.32	18.44	19.24	19.85	20.33	20.71	21.02	21.28	21.50
1625.6	11.18	12.93	15.63	17.29	18.41	19.22	19.83	20.30	20.68	21.00	21.26	21.48

Ambient Temperature T_m = 24°C, Fluid Temperature = -190°C, Medium Emissivity (f = 8W/m^{2}K)
Wind Velocity = 3m/second

The above data is applicable to cylindrical insulation and is based upon the following formulae

Thermal Resistance R(m^{2}K/W) $= d_o/(f.d_n)+\{(d_o/k).\ln(d_n/d_o)\times10^{-3}\}$

Rate of Heat Transfer q(W/m^2) $= (T_1-T_m).R$

Surface Temperature T_2(°C) $= T_m+\{q.d_o/(f.d_n)\}$

Where
- d_o = Pipe O/Dia.
- d_n = Insulation O/Dia.
- T_1 = Pipe Temperature.
- T_m = The ambient temperature of the air.

INSULATION THICKNESS SELECTION CHARTS

Insul. Thick	140	150	160	170	180	190	200	210	220	230	240	250
Pipe O/D (do)	T_2 (°C)	T_2 (°C)	T_2 (°C)	T_2 (°C)	T_2 (°C)	T_2 (°C)	T_2 (°C)	T_2 (°C)	T_2 (°C)	T_2 (°C)	T_2 (°C)	T_2 (°C)
26.9	23.05	23.13	23.20	23.26	23.31	23.36	23.40	23.43	23.47	23.50	23.52	23.55
33.7	22.99	23.07	23.15	23.21	23.27	23.31	23.36	23.40	23.43	23.46	23.49	23.52
42.4	22.91	23.01	23.09	23.16	23.22	23.27	23.31	23.36	23.39	23.43	23.46	23.49
48.3	22.87	22.97	23.05	23.12	23.18	23.24	23.29	23.33	23.37	23.41	23.44	23.47
60.3	22.80	22.90	22.99	23.06	23.13	23.19	23.24	23.29	23.33	23.37	23.40	23.43
76.1	22.71	22.82	22.91	23.00	23.07	23.13	23.19	23.24	23.28	23.32	23.36	23.39
88.9	22.65	22.76	22.86	22.95	23.02	23.09	23.15	23.20	23.25	23.29	23.33	23.36
101.6	22.60	22.72	22.82	22.91	22.98	23.05	23.11	23.17	23.22	23.26	23.30	23.34
114.3	22.55	22.67	22.78	22.87	22.95	23.02	23.08	23.14	23.19	23.23	23.27	23.31
139.7	22.47	22.59	22.71	22.80	22.89	22.96	23.03	23.09	23.14	23.19	23.23	23.27
168.3	22.39	22.52	22.64	22.74	22.83	22.90	22.97	23.04	23.09	23.14	23.19	23.23
193.7	22.33	22.47	22.59	22.69	22.78	22.86	22.93	23.00	23.05	23.11	23.15	23.20
219.1	22.28	22.42	22.54	22.65	22.74	22.82	22.90	22.96	23.02	23.08	23.12	23.17
244.5	22.23	22.38	22.50	22.61	22.70	22.79	22.86	22.93	22.99	23.05	23.10	23.14
273.0	22.19	22.33	22.46	22.57	22.67	22.75	22.83	22.90	22.96	23.02	23.07	23.12
323.9	22.12	22.27	22.40	22.51	22.61	22.70	22.78	22.85	22.92	22.98	23.03	23.08
355.6	22.08	22.24	22.37	22.48	22.58	22.67	22.75	22.83	22.89	22.95	23.01	23.05
406.4	22.04	22.19	22.32	22.44	22.54	22.63	22.72	22.79	22.86	22.92	22.97	23.02
457.0	21.99	22.15	22.28	22.40	22.51	22.60	22.68	22.76	22.83	22.89	22.94	23.00
508.0	21.96	22.11	22.25	22.37	22.48	22.57	22.66	22.73	22.80	22.86	22.92	22.97
610.0	21.90	22.06	22.20	22.32	22.43	22.52	22.61	22.69	22.76	22.82	22.88	22.93
762.0	21.83	22.00	22.14	22.26	22.37	22.47	22.55	22.63	22.71	22.77	22.83	22.89
914.0	21.79	21.95	22.09	22.22	22.33	22.43	22.51	22.60	22.67	22.73	22.79	22.85
965.2	21.77	21.94	22.08	22.20	22.32	22.41	22.50	22.58	22.66	22.72	22.78	22.84
1016.0	21.76	21.93	22.07	22.19	22.30	22.40	22.49	22.57	22.65	22.71	22.77	22.83
1066.8	21.75	21.91	22.06	22.18	22.29	22.39	22.48	22.56	22.64	22.70	22.77	22.82
1219.2	21.72	21.89	22.03	22.16	22.27	22.37	22.46	22.54	22.61	22.68	22.74	22.80
1422.4	21.69	21.86	22.00	22.13	22.24	22.34	22.43	22.51	22.59	22.66	22.72	22.78
1625.6	21.67	21.83	21.98	22.11	22.22	22.32	22.41	22.49	22.57	22.64	22.70	22.76

Ambient Temperature T_m = 24°C, Fluid Temperature = -190°C, Medium Emissivity (f = 8W/m^{2}K)
Wind Velocity = 3m/second

The above data is applicable to cylindrical insulation and is based upon the following formulae

Thermal Resistance R(m^{2}K/W) $= d_o/(f.d_n)+\{(d_o/k).\ln(d_n/d_o)\times10^{-3}\}$

Rate of Heat Transfer q(W/m^2) $= (T_1-T_m).R$

Surface Temperature T_2(°C) $= T_m+\{q.d_o/(f.d_n)\}$

Where
- d_o = Pipe O/Dia.
- d_n = Insulation O/Dia.
- T_1 = Pipe Temperature.
- T_m = The ambient temperature of the air.
- T_2 = Surface temperature of the insulation.

INSULATION THICKNESS SELECTION CHARTS

Insul. Thick	25	30	40	50	60	70	80	90	100	110	120	130
Pipe O/D (do)	T_2 (°C)	T_2 (°C)	T_2 (°C)	T_2 (°C)	T_2 (°C)	T_2 (°C)	T_2 (°C)	T_2 (°C)	T_2 (°C)	T_2 (°C)	T_2 (°C)	T_2 (°C)
26.9	9.76	14.07	15.26	15.94	16.36	16.66	16.87	17.03	17.15	17.25	17.33	17.39
33.7	9.28	13.83	15.08	15.80	16.25	16.57	16.79	16.96	17.09	17.20	17.28	17.35
42.4	8.79	13.59	14.89	15.65	16.13	16.47	16.71	16.89	17.03	17.14	17.23	17.31
48.3	8.53	13.45	14.79	15.56	16.06	16.41	16.66	16.85	16.99	17.11	17.20	17.28
60.3	8.09	13.22	14.61	15.42	15.94	16.30	16.57	16.77	16.92	17.05	17.15	17.23
76.1	7.65	12.99	14.42	15.26	15.81	16.19	16.47	16.68	16.85	16.98	17.09	17.18
88.9	7.38	12.84	14.30	15.16	15.73	16.12	16.41	16.63	16.80	16.93	17.05	17.14
101.6	7.17	12.72	14.20	15.08	15.65	16.06	16.35	16.58	16.75	16.89	17.01	17.11
114.3	6.99	12.62	14.12	15.01	15.59	16.00	16.30	16.53	16.71	16.86	16.98	17.08
139.7	6.70	12.47	13.98	14.89	15.49	15.91	16.22	16.46	16.65	16.80	16.92	17.02
168.3	6.47	12.33	13.86	14.78	15.39	15.82	16.14	16.39	16.58	16.74	16.87	16.98
193.7	6.31	12.24	13.78	14.71	15.33	15.76	16.09	16.34	16.54	16.70	16.83	16.94
219.1	6.18	12.17	13.71	14.65	15.27	15.71	16.04	16.30	16.50	16.66	16.79	16.91
244.5	6.07	12.11	13.66	14.60	15.22	15.67	16.00	16.26	16.46	16.63	16.77	16.88
273.0	5.97	12.05	13.61	14.55	15.18	15.63	15.96	16.22	16.43	16.60	16.74	16.85
323.9	5.84	11.97	13.53	14.48	15.11	15.57	15.91	16.17	16.38	16.55	16.69	16.81
355.6	5.77	11.93	13.49	14.44	15.08	15.54	15.88	16.14	16.35	16.53	16.67	16.79
406.4	5.68	11.88	13.44	14.40	15.04	15.50	15.84	16.11	16.32	16.49	16.64	16.76
457.0	5.61	11.84	13.41	14.36	15.00	15.46	15.81	16.08	16.29	16.47	16.61	16.73
508.0	5.56	11.81	13.37	14.33	14.97	15.43	15.78	16.05	16.27	16.44	16.59	16.71
610.0	5.47	11.76	13.32	14.28	14.93	15.39	15.74	16.01	16.23	16.40	16.55	16.68
762.0	5.38	11.70	13.27	14.23	14.88	15.34	15.69	15.96	16.18	16.36	16.51	16.64
914.0	5.32	11.67	13.23	14.19	14.84	15.31	15.66	15.93	16.15	16.33	16.48	16.61
965.2	5.30	11.66	13.22	14.18	14.83	15.30	15.65	15.92	16.14	16.32	16.47	16.60
1016.0	5.29	11.65	13.22	14.18	14.82	15.29	15.64	15.92	16.14	16.32	16.47	16.59
1066.8	5.28	11.64	13.21	14.17	14.82	15.28	15.64	15.91	16.13	16.31	16.46	16.59
1219.2	5.24	11.62	13.19	14.15	14.80	15.26	15.62	15.89	16.11	16.29	16.44	16.57
1422.4	5.21	11.60	13.17	14.13	14.78	15.24	15.60	15.87	16.09	16.27	16.43	16.55
1625.6	5.18	11.58	13.15	14.11	14.76	15.23	15.58	15.86	16.08	16.26	16.41	16.54

Ambient Temperature T_m = 18°C, Fluid Temperature = -106°C, Medium Emissivity (f = 8W/m^{2}K)
Wind Velocity = 3m/second

The above data is applicable to cylindrical insulation and is based upon the following formulae

Thermal Resistance R(m^{2}K/W) $= d_o/(f.d_n)+\{(d_o/k).\ln(d_n/d_o)\times10^{-3}\}$

Rate of Heat Transfer q(W/m^2) $= (T_1-T_m).R$

Surface Temperature T_2(°C) $= T_m+\{q.d_o/(f.d_n)\}$

Where
- d_o = Pipe O/Dia.
- d_n = Insulation O/Dia.
- T_1 = Pipe Temperature.
- T_m = The ambient temperature of the air.
- T_2 = Surface temperature of the insulation.

INSULATION THICKNESS SELECTION CHARTS

Insul. Thick	140	150	160	170	180	190	200	210	220	230	240	250
Pipe O/D (do)	T_2 (°C)	T_2 (°C)	T_2 (°C)	T_2 (°C)	T_2 (°C)	T_2 (°C)	T_2 (°C)	T_2 (°C)	T_2 (°C)	T_2 (°C)	T_2 (°C)	T_2 (°C)
26.9	17.45	17.50	17.54	17.57	17.60	17.63	17.65	17.67	17.69	17.71	17.72	17.74
33.7	17.41	17.46	17.50	17.54	17.57	17.60	17.63	17.65	17.67	17.69	17.71	17.72
42.4	17.37	17.42	17.47	17.51	17.55	17.58	17.60	17.63	17.65	17.67	17.69	17.70
48.3	17.35	17.40	17.45	17.49	17.53	17.56	17.59	17.61	17.64	17.66	17.67	17.69
60.3	17.30	17.36	17.41	17.46	17.50	17.53	17.56	17.59	17.61	17.63	17.65	17.67
76.1	17.25	17.32	17.37	17.42	17.46	17.50	17.53	17.56	17.58	17.61	17.63	17.65
88.9	17.22	17.28	17.34	17.39	17.43	17.47	17.51	17.54	17.56	17.59	17.61	17.63
101.6	17.19	17.26	17.31	17.37	17.41	17.45	17.49	17.52	17.55	17.57	17.59	17.61
114.3	17.16	17.23	17.29	17.34	17.39	17.43	17.47	17.50	17.53	17.56	17.58	17.60
139.7	17.11	17.19	17.25	17.31	17.35	17.40	17.44	17.47	17.50	17.53	17.55	17.58
168.3	17.07	17.14	17.21	17.27	17.32	17.36	17.41	17.44	17.47	17.50	17.53	17.55
193.7	17.03	17.11	17.18	17.24	17.29	17.34	17.38	17.42	17.45	17.48	17.51	17.53
219.1	17.00	17.08	17.15	17.22	17.27	17.32	17.36	17.40	17.43	17.46	17.49	17.52
244.5	16.98	17.06	17.13	17.19	17.25	17.30	17.34	17.38	17.42	17.45	17.48	17.50
273.0	16.95	17.03	17.11	17.17	17.23	17.28	17.32	17.36	17.40	17.43	17.46	17.49
323.9	16.91	17.00	17.07	17.14	17.20	17.25	17.29	17.34	17.37	17.41	17.44	17.46
355.6	16.89	16.98	17.05	17.12	17.18	17.23	17.28	17.32	17.36	17.39	17.42	17.45
406.4	16.86	16.95	17.03	17.10	17.16	17.21	17.26	17.30	17.34	17.37	17.40	17.43
457.0	16.84	16.93	17.01	17.07	17.14	17.19	17.24	17.28	17.32	17.36	17.39	17.42
508.0	16.82	16.91	16.99	17.06	17.12	17.17	17.22	17.27	17.31	17.34	17.37	17.40
610.0	16.78	16.87	16.96	17.03	17.09	17.14	17.19	17.24	17.28	17.32	17.35	17.38
762.0	16.75	16.84	16.92	16.99	17.06	17.11	17.16	17.21	17.25	17.29	17.32	17.35
914.0	16.72	16.81	16.89	16.97	17.03	17.09	17.14	17.19	17.23	17.27	17.30	17.33
965.2	16.71	16.80	16.89	16.96	17.02	17.08	17.13	17.18	17.22	17.26	17.30	17.33
1016.0	16.70	16.80	16.88	16.95	17.02	17.08	17.13	17.17	17.22	17.25	17.29	17.32
1066.8	16.70	16.79	16.87	16.95	17.01	17.07	17.12	17.17	17.21	17.25	17.28	17.32
1219.2	16.68	16.78	16.86	16.93	17.00	17.05	17.11	17.15	17.20	17.24	17.27	17.30
1422.4	16.66	16.76	16.84	16.92	16.98	17.04	17.09	17.14	17.18	17.22	17.26	17.29
1625.6	16.65	16.75	16.83	16.90	16.97	17.03	17.08	17.13	17.17	17.21	17.25	17.28

Ambient Temperature T_m = 18°C, Fluid Temperature = -106°C, Medium Emissivity (f = 8W/m^{2}K)
Wind Velocity = 3m/second

The above data is applicable to cylindrical insulation and is based upon the following formulae

Thermal Resistance R(m^{2}K/W) $= d_o/(f.d_n)+\{(d_o/k).\ln(d_n/d_o)\times10^{-3}\}$

Rate of Heat Transfer q(W/m^2) $= (T_1-T_m).R$

Surface Temperature T_2(°C) $= T_m+\{q.d_o/(f.d_n)\}$

Where
- d_o = Pipe O/Dia.
- d_n = Insulation O/Dia.
- T_1 = Pipe Temperature.
- T_m = The ambient temperature of the air.
- T_2 = Surface temperature of the insulation.

INSULATION THICKNESS SELECTION CHARTS

Insul. Thick	25	30	40	50	60	70	80	90	100	110	120	130
Pipe O/D (do)	T_2 (°C)	T_2 (°C)	T_2 (°C)	T_2 (°C)	T_2 (°C)	T_2 (°C)	T_2 (°C)	T_2 (°C)	T_2 (°C)	T_2 (°C)	T_2 (°C)	T_2 (°C)
26.9	15.76	19.88	21.13	21.84	22.29	22.59	22.81	22.98	23.11	23.21	23.30	23.37
33.7	15.28	19.63	20.94	21.69	22.17	22.50	22.73	22.91	23.05	23.16	23.25	23.32
42.4	14.79	19.37	20.74	21.54	22.04	22.39	22.64	22.83	22.98	23.10	23.20	23.27
48.3	14.53	19.23	20.63	21.45	21.97	22.33	22.59	22.79	22.94	23.06	23.16	23.25
60.3	14.09	18.99	20.44	21.29	21.84	22.22	22.50	22.71	22.87	23.00	23.11	23.19
76.1	13.65	18.74	20.25	21.13	21.71	22.11	22.40	22.62	22.79	22.93	23.04	23.14
88.9	13.38	18.59	20.12	21.03	21.62	22.03	22.33	22.56	22.74	22.88	23.00	23.10
101.6	13.17	18.47	20.02	20.94	21.54	21.96	22.27	22.51	22.69	22.84	22.96	23.06
114.3	12.99	18.36	19.93	20.86	21.47	21.90	22.22	22.46	22.65	22.80	22.93	23.03
139.7	12.70	18.20	19.78	20.74	21.36	21.81	22.13	22.38	22.58	22.74	22.87	22.98
168.3	12.47	18.06	19.66	20.63	21.27	21.72	22.05	22.31	22.51	22.68	22.81	22.93
193.7	12.31	17.96	19.58	20.55	21.20	21.66	22.00	22.26	22.47	22.63	22.77	22.89
219.1	12.18	17.89	19.51	20.49	21.14	21.60	21.95	22.21	22.43	22.60	22.74	22.85
244.5	12.07	17.82	19.45	20.43	21.09	21.56	21.91	22.18	22.39	22.56	22.71	22.82
273.0	11.97	17.76	19.39	20.38	21.04	21.51	21.87	22.14	22.35	22.53	22.67	22.80
323.9	11.84	17.68	19.31	20.31	20.97	21.45	21.81	22.08	22.30	22.48	22.63	22.75
355.6	11.77	17.64	19.28	20.27	20.94	21.42	21.78	22.05	22.28	22.46	22.60	22.73
406.4	11.68	17.59	19.22	20.22	20.89	21.37	21.74	22.02	22.24	22.42	22.57	22.70
457.0	11.61	17.54	19.18	20.18	20.86	21.34	21.70	21.98	22.21	22.39	22.54	22.67
508.0	11.56	17.51	19.15	20.15	20.83	21.31	21.67	21.96	22.18	22.37	22.52	22.65
610.0	11.47	17.45	19.10	20.10	20.78	21.26	21.63	21.91	22.14	22.33	22.48	22.61
762.0	11.38	17.40	19.04	20.05	20.73	21.21	21.58	21.87	22.10	22.28	22.44	22.57
914.0	11.32	17.36	19.00	20.01	20.69	21.18	21.55	21.83	22.06	22.25	22.41	22.54
965.2	11.30	17.35	18.99	20.00	20.68	21.17	21.54	21.82	22.05	22.24	22.40	22.53
1016.0	11.29	17.34	18.98	19.99	20.67	21.16	21.53	21.82	22.05	22.24	22.39	22.53
1066.8	11.28	17.33	18.98	19.98	20.66	21.15	21.52	21.81	22.04	22.23	22.39	22.52
1219.2	11.24	17.31	18.96	19.96	20.64	21.13	21.50	21.79	22.02	22.21	22.37	22.50
1422.4	11.21	17.29	18.93	19.94	20.62	21.11	21.48	21.77	22.00	22.19	22.35	22.48
1625.6	11.18	17.27	18.92	19.93	20.61	21.10	21.47	21.75	21.99	22.18	22.33	22.47

Ambient Temperature T_m = 24°C, Fluid Temperature = -106°C, Medium Emissivity (f = 8W/m^{2}K)
Wind Velocity = 3m/second

The above data is applicable to cylindrical insulation and is based upon the following formulae

Thermal Resistance R(m^{2}K/W) $= d_o/(f.d_n)+\{(d_o/k).\ln(d_n/d_o)\times10^{-3}\}$

Rate of Heat Transfer q(W/m^2) $= (T_1-T_m).R$

Surface Temperature T_2(°C) $= T_m+\{q.d_o/(f.d_n)\}$

Where
- d_o = Pipe O/Dia.
- d_n = Insulation O/Dia.
- T_1 = Pipe Temperature.
- T_m = The ambient temperature of the air.
- T_2 = Surface temperature of the insulation.

INSULATION THICKNESS SELECTION CHARTS

Insul. Thick	140	150	160	170	180	190	200	210	220	230	240	250
Pipe O/D (do)	T_2 (°C)	T_2 (°C)	T_2 (°C)	T_2 (°C)	T_2 (°C)	T_2 (°C)	T_2 (°C)	T_2 (°C)	T_2 (°C)	T_2 (°C)	T_2 (°C)	T_2 (°C)
26.9	23.42	23.47	23.51	23.55	23.58	23.61	23.63	23.66	23.68	23.69	23.71	23.72
33.7	23.38	23.44	23.48	23.52	23.55	23.58	23.61	23.63	23.65	23.67	23.69	23.71
42.4	23.34	23.40	23.45	23.49	23.52	23.56	23.58	23.61	23.63	23.65	23.67	23.69
48.3	23.31	23.37	23.42	23.47	23.50	23.54	23.57	23.59	23.62	23.64	23.66	23.68
60.3	23.27	23.33	23.38	23.43	23.47	23.51	23.54	23.57	23.59	23.61	23.64	23.65
76.1	23.22	23.28	23.34	23.39	23.43	23.47	23.51	23.54	23.56	23.59	23.61	23.63
88.9	23.18	23.25	23.31	23.36	23.41	23.45	23.48	23.51	23.54	23.57	23.59	23.61
101.6	23.15	23.22	23.28	23.34	23.38	23.42	23.46	23.49	23.52	23.55	23.57	23.60
114.3	23.12	23.19	23.26	23.31	23.36	23.40	23.44	23.48	23.51	23.53	23.56	23.58
139.7	23.07	23.15	23.21	23.27	23.32	23.37	23.41	23.44	23.48	23.51	23.53	23.56
168.3	23.02	23.10	23.17	23.23	23.29	23.33	23.38	23.41	23.45	23.48	23.51	23.53
193.7	22.99	23.07	23.14	23.20	23.26	23.31	23.35	23.39	23.43	23.46	23.49	23.51
219.1	22.95	23.04	23.11	23.18	23.23	23.28	23.33	23.37	23.41	23.44	23.47	23.49
244.5	22.93	23.01	23.09	23.15	23.21	23.26	23.31	23.35	23.39	23.42	23.45	23.48
273.0	22.90	22.99	23.06	23.13	23.19	23.24	23.29	23.33	23.37	23.40	23.44	23.46
323.9	22.86	22.95	23.03	23.10	23.16	23.21	23.26	23.30	23.34	23.38	23.41	23.44
355.6	22.84	22.93	23.01	23.08	23.14	23.19	23.24	23.29	23.33	23.36	23.40	23.43
406.4	22.81	22.90	22.98	23.05	23.11	23.17	23.22	23.27	23.31	23.34	23.38	23.41
457.0	22.78	22.88	22.96	23.03	23.09	23.15	23.20	23.25	23.29	23.32	23.36	23.39
508.0	22.76	22.85	22.94	23.01	23.07	23.13	23.18	23.23	23.27	23.31	23.34	23.38
610.0	22.72	22.82	22.90	22.98	23.04	23.10	23.15	23.20	23.24	23.28	23.32	23.35
762.0	22.68	22.78	22.87	22.94	23.01	23.07	23.12	23.17	23.21	23.25	23.29	23.32
914.0	22.66	22.75	22.84	22.92	22.98	23.04	23.10	23.15	23.19	23.23	23.27	23.30
965.2	22.65	22.75	22.83	22.91	22.98	23.04	23.09	23.14	23.18	23.22	23.26	23.30
1016.0	22.64	22.74	22.83	22.90	22.97	23.03	23.08	23.13	23.18	23.22	23.26	23.29
1066.8	22.63	22.73	22.82	22.90	22.96	23.02	23.08	23.13	23.17	23.21	23.25	23.28
1219.2	22.62	22.72	22.80	22.88	22.95	23.01	23.06	23.11	23.16	23.20	23.24	23.27
1422.4	22.60	22.70	22.79	22.86	22.93	22.99	23.05	23.10	23.14	23.18	23.22	23.26
1625.6	22.58	22.68	22.77	22.85	22.92	22.98	23.03	23.08	23.13	23.17	23.21	23.24

Ambient Temperature T_m = 24°C, Fluid Temperature = -106°C, Medium Emissivity (f = 8W/m^{2}K)
Wind Velocity = 3m/second

The above data is applicable to cylindrical insulation and is based upon the following formulae

Thermal Resistance R(m^{2}K/W) $= d_o/(f.d_n)+\{(d_o/k).\ln(d_n/d_o)\times10^{-3}\}$

Rate of Heat Transfer q(W/m^2) $= (T_1-T_m).R$

Surface Temperature T_2(°C) $= T_m+\{q.d_o/(f.d_n)\}$

Where
- d_o = Pipe O/Dia.
- d_n = Insulation O/Dia.
- T_1 = Pipe Temperature.
- T_m = The ambient temperature of the air.
- T_2 = Surface temperature of the insulation.

MAXIMUM RADIAL APPLIED LOADING

Shoe Length	150				200				250			
No. Layers	1	2	3	4	1	2	3	4	1	2	3	4
Pipe O/D	Limiting Radial Load (kN)											
21.3	2.51	2.99	3.47	3.95	3.19	3.67	4.15	4.63	3.87	4.35	4.83	5.31
26.9	3.17	3.78	4.38	4.99	4.03	4.64	5.24	5.85	4.89	5.49	6.10	6.70
33.7	3.98	4.73	5.49	6.25	5.05	5.81	6.57	7.32	6.12	6.88	7.64	8.40
42.4	5.00	5.96	6.91	7.86	6.35	7.31	8.26	9.21	7.70	8.66	9.61	10.56
48.3	5.70	6.79	7.87	8.96	7.24	8.32	9.41	10.50	8.77	9.86	10.95	12.03
60.3	7.11	8.47	9.83	11.19	9.03	10.39	11.75	13.10	10.95	12.31	13.67	15.02
76.1	8.98	10.69	12.40	14.12	11.40	13.11	14.83	16.54	13.82	15.53	17.25	18.96
88.9	10.49	12.49	14.49	16.49	13.32	15.32	17.32	19.32	16.15	18.15	20.15	22.15
114.3	13.49	16.06	18.55	20.46	17.12	19.70	22.27	24.84	20.76	23.33	25.90	28.48
139.7	16.48	19.07	20.98	22.89	20.93	24.07	27.22	30.36	25.37	28.52	31.66	34.81
168.3	19.86	21.80	23.71	25.62	25.21	29.00	32.79	36.57	30.57	34.36	38.14	41.93
193.7	35.76	37.90	40.89	43.87	45.40	52.22	59.04	65.86	55.05	61.87	68.69	75.51
219.1	40.20	41.69	44.68	47.67	51.35	59.07	66.78	74.50	62.27	69.98	77.69	85.41
244.5	43.99	45.49	48.48	51.46	57.31	65.92	74.53	83.14	69.48	78.09	86.70	95.31
273	48.25	49.75	52.73	55.72	63.99	73.60	83.21	90.23	77.58	87.20	96.81	106.42
323.9	55.86	57.35	60.34	63.32	75.92	87.32	96.38	100.37	92.05	103.45	114.86	126.26
355.6	60.59	62.08	65.07	68.06	83.35	95.87	102.70	106.68	101.06	113.58	126.10	138.62
406.4	68.18	69.67	72.66	75.65	95.26	108.83	112.82	116.80	115.49	129.80	144.11	158.42
457	75.74	77.23	80.22	83.21	107.12	118.91	122.89	126.88	129.87	145.96	162.06	178.15
508	83.36	84.85	87.84	90.83	119.07	129.07	133.05	137.04	144.37	162.25	180.14	191.21
559	90.98	92.47	95.46	98.44	131.02	139.23	143.21	147.19	158.86	178.54	198.22	203.91
610	98.59	100.09	103.08	106.06	142.98	149.39	153.37	157.35	173.35	194.83	211.63	216.61
660	166.01	168.35	173.03	177.70	242.14	249.41	255.64	261.88	293.58	329.95	350.73	358.52
711.2	177.98	180.32	185.00	189.67	259.13	265.37	271.61	277.84	316.35	355.55	370.68	378.48
762	189.86	192.20	196.88	201.55	274.97	281.21	287.44	293.68	338.95	380.94	390.48	398.27
813	201.79	204.12	208.80	213.48	290.87	297.11	303.34	309.58	361.63	402.56	410.35	418.15
864	213.71	216.05	220.73	225.40	306.77	313.01	319.24	325.48	384.32	422.43	430.23	438.02
914	225.40	227.74	232.42	237.09	322.36	328.60	334.83	341.07	406.56	441.92	449.71	457.51
965.2	237.37	239.71	244.39	249.07	338.32	344.56	350.79	357.03	429.33	461.87	469.67	477.46
1016	249.25	251.59	256.27	260.94	354.16	360.39	366.63	372.86	451.93	481.67	489.46	497.26
1066.8	261.13	263.47	268.14	272.82	370.00	376.23	382.47	388.70	474.53	501.47	509.26	517.05
1219.2	296.76	299.10	303.78	308.46	417.51	423.74	429.98	436.21	542.31	560.86	568.65	576.44
1422.4	344.28	346.61	351.29	355.97	480.86	487.09	493.33	499.56	632.25	640.04	647.84	655.63
1625.6	391.79	394.13	398.80	403.48	544.21	550.44	556.68	562.91	711.44	719.23	727.02	734.82

NB. The maximum radial load is calculated as the resultant force due to all vertical and transverse loadings such that —

$$\text{Radial Force } Fr = \sqrt{(Fv^2 + Fh^2)}$$

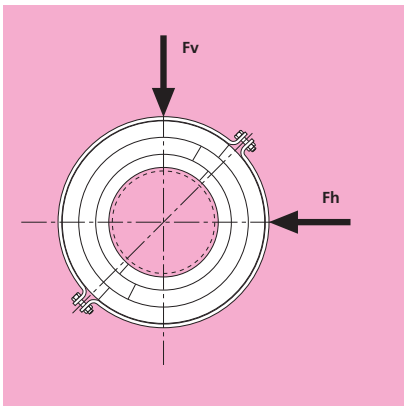

MAXIMUM RADIAL APPLIED LOADING

Shoe Length	300				450				600			
No. Layers	1	2	3	4	1	2	3	4	1	2	3	4
Pipe O/D	Limiting Radial Load (kN)											
21.3	4.55	5.03	5.51	5.98	6.58	7.06	7.54	8.02	8.61	9.09	9.57	10.05
26.9	5.74	6.35	6.95	7.56	8.31	8.92	9.52	10.13	10.88	11.48	12.09	12.69
33.7	7.19	7.95	8.71	9.47	10.41	11.17	11.93	12.69	13.63	14.39	15.15	15.90
42.4	9.05	10.00	10.96	11.91	13.10	14.05	15.01	15.96	17.15	18.10	19.06	20.01
48.3	10.31	11.40	12.48	13.57	14.92	16.01	17.10	18.18	19.53	20.62	21.71	22.79
60.3	12.87	14.23	15.59	16.94	18.63	19.99	21.34	22.70	24.39	25.74	27.10	28.46
76.1	16.24	17.96	19.67	21.38	23.51	25.22	26.93	28.65	30.78	32.49	34.20	35.91
88.9	18.98	20.98	22.98	24.98	27.46	29.46	31.47	33.47	35.95	37.95	39.95	41.95
114.3	24.40	26.97	29.54	32.11	35.31	37.88	40.46	43.03	46.22	48.80	51.37	53.94
139.7	29.82	32.96	36.11	39.25	43.16	46.30	49.45	52.59	56.50	59.64	62.78	65.93
168.3	35.92	39.71	43.50	47.29	51.99	55.78	59.57	63.36	68.06	71.85	75.64	79.42
193.7	64.69	71.51	78.33	85.15	93.63	100.45	107.27	114.09	122.56	129.38	136.20	143.02
219.1	73.18	80.89	88.60	96.32	105.91	113.62	121.33	129.05	138.64	146.35	154.06	161.78
244.5	81.66	90.27	98.88	107.49	118.18	126.79	135.40	144.01	154.71	163.32	171.93	180.53
273	91.18	100.79	110.40	120.01	131.96	141.57	151.18	160.80	172.74	182.35	191.97	201.58
323.9	108.18	119.58	130.99	142.39	156.56	167.97	179.37	190.78	204.95	216.35	227.76	239.16
355.6	118.76	131.28	143.81	156.33	171.88	184.41	196.93	209.45	225.01	237.53	250.05	262.57
406.4	135.73	150.04	164.35	178.66	196.44	210.75	225.06	239.37	257.15	271.46	285.77	300.08
457	152.63	168.72	184.81	200.90	220.90	236.99	253.08	269.17	289.17	305.26	321.35	337.44
508	169.66	187.55	205.44	223.32	245.55	263.44	281.32	299.21	321.44	339.32	357.21	375.10
559	186.70	206.38	226.06	245.74	270.20	289.88	309.57	329.25	353.71	373.39	393.07	412.76
610	203.73	225.21	246.68	268.16	294.85	316.33	337.81	359.29	385.98	407.46	428.93	450.41
660	345.02	381.39	417.76	454.14	499.34	535.71	572.09	608.46	653.66	690.03	726.41	762.78
711.2	371.78	410.98	450.17	489.37	538.07	577.27	616.47	655.66	704.37	743.56	782.76	821.95
762	398.34	440.33	482.33	515.34	576.51	618.50	660.50	702.49	754.68	796.67	838.67	880.66
813	425.00	469.80	514.61	539.19	615.09	659.90	704.70	749.51	805.19	849.99	894.80	939.61
864	451.66	499.27	546.89	563.04	653.68	701.29	748.91	796.53	855.70	903.32	950.93	998.55
914	477.80	528.17	577.07	586.42	691.51	741.88	792.25	842.62	905.22	955.59	1005.96	1056.34
965.2	504.56	557.75	601.01	610.36	730.24	783.44	836.63	889.83	955.93	1009.12	1062.31	1115.51
1016	531.12	587.11	624.77	634.12	768.68	824.67	880.66	936.66	1006.24	1062.23	1118.23	1174.22
1066.8	557.67	616.47	648.52	657.88	807.11	865.90	924.70	983.49	1056.55	1115.34	1174.14	1232.93
1219.2	637.34	704.53	719.79	729.14	922.41	989.60	1056.80	1123.99	1207.49	1274.68	1341.87	1409.06
1422.4	743.56	805.46	814.82	824.17	1076.15	1154.54	1232.93	1292.37	1408.73	1487.12	1565.52	1643.91
1625.6	849.79	900.49	909.84	919.19	1229.88	1319.47	1409.06	1434.91	1609.98	1699.57	1789.16	1878.75

NB. The maximum radial load is calculated as the resultant force due to all vertical and transverse loadings such that —

$$\text{Radial Force } Fr = \sqrt{(Fv^2 + Fh^2)}$$

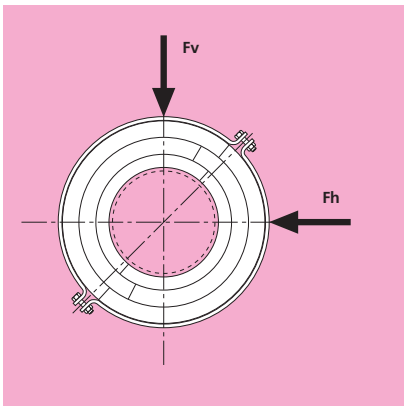

MAXIMUM AXIAL TORSION

Shoe Length		150				200				250				300				450				600			
Pipe O/D	No. of Layers	1	2	3	4	1	2	3	4	1	2	3	4	1	2	3	4	1	2	3	4	1	2	3	4
	Clamp Bolt	4 Bolts				4 Bolts				4 Bolts				4 Bolts				6 Bolts				6 Bolts			
21.3	M10	3.25Nm				4.33Nm				5.42Nm				6.50Nm				9.75Nm				13.00Nm			
26.9	M10	5.18Nm				6.91Nm				8.63Nm				10.36Nm				15.54Nm				20.72Nm			
33.7	M10	8.13Nm				10.84Nm				13.55Nm				16.27Nm				24.40Nm				32.53Nm			
42.4	M10	12.87Nm				17.17Nm				21.46Nm				25.75Nm				38.62Nm				51.50Nm			
48.3	M10	16.71Nm				22.27Nm				27.84Nm				33.41Nm				50.12Nm				66.82Nm			
60.3	M10	26.04Nm				34.71Nm				43.40Nm				52.07Nm				78.11Nm				101.98Nm			
76.1	M12	41.46Nm				55.30Nm				69.12Nm				82.94Nm				124.41Nm				165.87Nm			
88.9	M12	56.60Nm				75.45Nm				94.32Nm				113.18Nm				169.77Nm				218.53Nm			
114.3	M12	93.55Nm				124.73Nm				155.92Nm				187.11Nm				280.66Nm				280.97Nm			
139.7	M12	139.75Nm				186.32Nm				228.94Nm				228.94Nm				343.41Nm				343.41Nm			
168.3	M12	202.82Nm				270.44Nm				275.81Nm				275.81Nm				413.71Nm				413.71Nm			
193.7	M12	268.66Nm				317.43Nm				317.43Nm				317.43Nm				476.15Nm				476.15Nm			
219.1	M12	343.74Nm				359.06Nm				359.06Nm				359.06Nm				538.59Nm				538.59Nm			
244.5	M12	400.68Nm				400.68Nm				400.68Nm				400.68Nm				601.03Nm				601.03Nm			
273	M12	447.39Nm				447.39Nm				447.39Nm				447.39Nm				671.09Nm				671.09Nm			
323.9	M16	751.25Nm				0.99kNm				0.99kNm				0.99kNm				1.48kNm				1.48kNm			
355.6	M16	0.91kNm				1.09kNm				1.09kNm				1.09kNm				1.63kNm				1.63kNm			
406.4	M16	1.18kNm				1.24kNm				1.24kNm				1.24kNm				1.86kNm				1.86kNm			
457	M16	1.39kNm				1.39kNm				1.39kNm				1.39kNm				2.09kNm				2.09kNm			
508	M16	1.55kNm				1.55kNm				1.55kNm				1.55kNm				2.33kNm				2.33kNm			
559	M16	1.71kNm				1.71kNm				1.71kNm				1.71kNm				2.56kNm				2.56kNm			
610	M16	1.86kNm				1.86kNm				1.86kNm				1.86kNm				2.79kNm				2.79kNm			
660	M20	3.12kNm				3.14kNm				3.14kNm				3.14kNm				4.72kNm				4.72kNm			
711.2	M20	3.39kNm				3.39kNm				3.39kNm				3.39kNm				5.08kNm				5.08kNm			
762	M20	3.63kNm				3.63kNm				3.63kNm				3.63kNm				5.44kNm				5.44kNm			
813	M20	3.87kNm				3.87kNm				3.87kNm				3.87kNm				5.81kNm				5.81kNm			
864	M20	4.12kNm				4.12kNm				4.12kNm				4.12kNm				6.17kNm				6.17kNm			
914	M20	4.35kNm				4.35kNm				4.35kNm				4.35kNm				6.53kNm				6.53kNm			
965.2	M20	4.60kNm				4.60kNm				4.60kNm				4.60kNm				6.90kNm				6.90kNm			
1016	M20	4.84kNm				4.84kNm				4.84kNm				4.84kNm				7.26kNm				7.26kNm			
1066.8	M24	7.32kNm				7.32kNm				7.32kNm				7.32kNm				10.98kNm				10.98kNm			
1219.2	M24	8.37kNm				8.37kNm				8.37kNm				8.37kNm				12.55kNm				12.55kNm			
1422.4	M24	9.76kNm				9.76kNm				9.76kNm				9.76kNm				14.64kNm				14.64kNm			
1625.6	M24	11.16kNm				11.16kNm				11.16kNm				11.16kNm				16.73kNm				16.73kNm			

NB. The above figures are calculated on the basis of the following torque settings within the clamp bolts —

M10	2.5Nm
M12	6.0Nm
M16	15.84Nm
M20	31.0Nm
M24	53.76Nm

These figures are offered for guidance only; the use of adhesives or thrust flanges may allow higher values to be achieved. The designer should assure himself that the proposed arrangement will function effectively.

MAXIMUM AXIAL THRUST

Shoe Length		150				200				250				300				450				600			
Pipe O/D	No. of Layers	1	2	3	4	1	2	3	4	1	2	3	4	1	2	3	4	1	2	3	4	1	2	3	4
	Clamp Bolt	4 Bolts				4 Bolts				4 Bolts				4 Bolts				6 Bolts				6 Bolts			
21.3	M10	0.31kN				0.41kN				0.51kN				0.61kN				0.92kN				1.22kN			
26.9	M10	0.39kN				0.51kN				0.64kN				0.77kN				1.16kN				1.54kN			
33.7	M10	0.48kN				0.64kN				0.80kN				0.97kN				1.45kN				1.93kN			
42.4	M10	0.61kN				0.81kN				1.01kN				1.21kN				1.82kN				2.43kN			
48.3	M10	0.69kN				0.92kN				1.15kN				1.38kN				2.08kN				2.77kN			
60.3	M10	0.86kN				1.15kN				1.44kN				1.73kN				2.59kN				3.38kN			
76.1	M12	1.09kN				1.45kN				1.82kN				2.18kN				3.27kN				4.36kN			
88.9	M12	1.27kN				1.70kN				2.12kN				2.55kN				3.82kN				4.92kN			
114.3	M12	1.64kN				2.18kN				2.73kN				3.27kN				4.91kN				4.92kN			
139.7	M12	2.00kN				2.67kN				3.28kN				3.28kN				4.92kN				4.92kN			
168.3	M12	2.41kN				3.21kN				3.28kN				3.28kN				4.92kN				4.92kN			
193.7	M12	2.77kN				3.28kN				3.28kN				3.28kN				4.92kN				4.92kN			
219.1	M12	3.14kN				3.28kN				3.28kN				3.28kN				4.92kN				4.92kN			
244.5	M12	3.28kN				3.28kN				3.28kN				3.28kN				4.92kN				4.92kN			
273	M12	3.28kN				3.28kN				3.28kN				3.28kN				4.92kN				4.92kN			
323.9	M16	4.64kN				6.10kN				6.10kN				6.10kN				9.16kN				9.16kN			
355.6	M16	5.09kN				6.10kN				6.10kN				6.10kN				9.16kN				9.16kN			
406.4	M16	5.82kN				6.10kN				6.10kN				6.10kN				9.16kN				9.16kN			
457	M16	6.10kN				6.10kN				6.10kN				6.10kN				9.16kN				9.16kN			
508	M16	6.10kN				6.10kN				6.10kN				6.10kN				9.16kN				9.16kN			
559	M16	6.10kN				6.10kN				6.10kN				6.10kN				9.16kN				9.16kN			
610	M16	6.10kN				6.10kN				6.10kN				6.10kN				9.16kN				9.16kN			
660	M20	9.45kN				9.53kN				9.53kN				9.53kN				14.29kN				14.29kN			
711.2	M20	9.53kN				9.53kN				9.53kN				9.53kN				14.29kN				14.29kN			
762	M20	9.53kN				9.53kN				9.53kN				9.53kN				14.29kN				14.29kN			
813	M20	9.53kN				9.53kN				9.53kN				9.53kN				14.29kN				14.29kN			
864	M20	9.53kN				9.53kN				9.53kN				9.53kN				14.29kN				14.29kN			
914	M20	9.53kN				9.53kN				9.53kN				9.53kN				14.29kN				14.29kN			
965.2	M20	9.53kN				9.53kN				9.53kN				9.53kN				14.29kN				14.29kN			
1016	M20	9.53kN				9.53kN				9.53kN				9.53kN				14.29kN				14.29kN			
1066.8	M24	13.72kN				13.72kN				13.72kN				13.72kN				20.59kN				20.59kN			
1219.2	M24	13.72kN				13.72kN				13.72kN				13.72kN				20.59kN				20.59kN			
1422.4	M24	13.72kN				13.72kN				13.72kN				13.72kN				20.59kN				20.59kN			
1625.6	M24	13.72kN				13.72kN				13.72kN				13.72kN				20.59kN				20.59kN			

NB. The above figures are calculated on the basis of the following torque settings within the clamp bolts —

M10	2.5Nm
M12	6.0Nm
M16	15.84Nm
M20	31.0Nm
M24	53.76Nm

These figures are offered for guidance only; the use of adhesives or thrust flanges may allow higher values to be achieved. The designer should assure himself that the proposed arrangement will function effectively.

Combined Forces

Where deadweight is combined with lateral forces, axial torsion and thrust the following method should be used to determine the suitability of the support to sustain the combination of forces.

$$\sum \frac{Fr}{Pr} + \frac{Ft}{Pt} + \frac{Fa}{Pa} \leq 1$$

Where:

Fr = Applied Radial Force	Pr = Maximum Allowable Radial Force
Ft = Applied Axial Torsion	Pt = Maximum Allowable Axial Torsion
Fa = Applied Axial Thrust	Pa = Maximum Allowable Axial Thrust

Construction Principles and Materials:

We have shown by full-scale testing at cryogenic temperatures that bonding between the layers of HD PUF can be kept to an absolute minimum and from these tests have concluded that in simple resting, hanging and guided supports the upper layers of HD PUF do not require any bonding.

It can be shown that by fully bonding the multiple layers of HD PUF together the PUF cradle becomes more rigid than the steel cradle surrounding it and will not flex to suit any irregularity or tolerance in the shape and diameter of the pipe.

However by bonding the layers together with a narrow band of adhesive positioned along the quadrant of the moulding the multiple layers can flex and shear relative to one another thereby allowing the cradle to adjust its shape to suit geometric or dimensional anomalies.

The diagram shown on the right illustrates this principle —

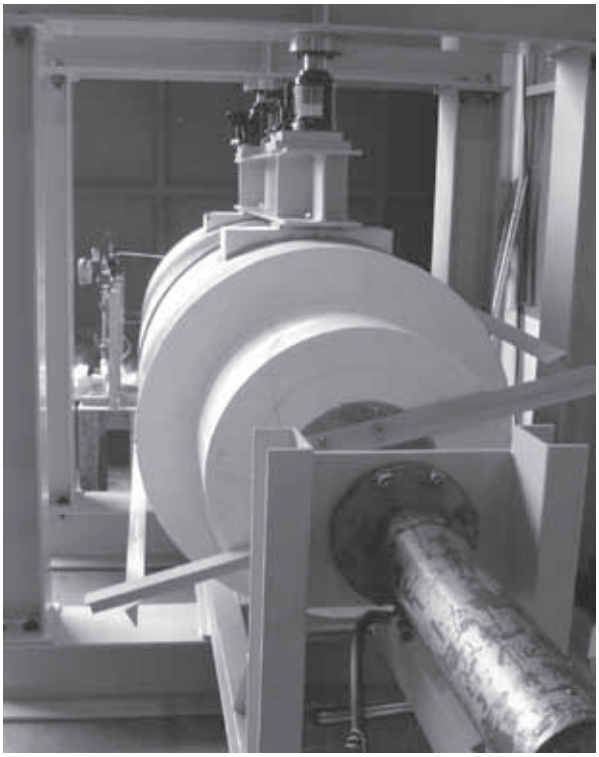

Full scale test of 24"NB (600NB) cryogenic pipe shoe at –165°C for client approval.

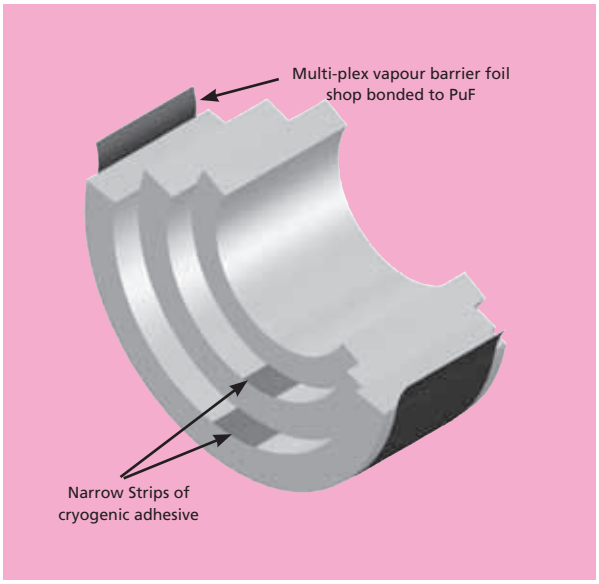

Strip bonding of lower insulation segments.

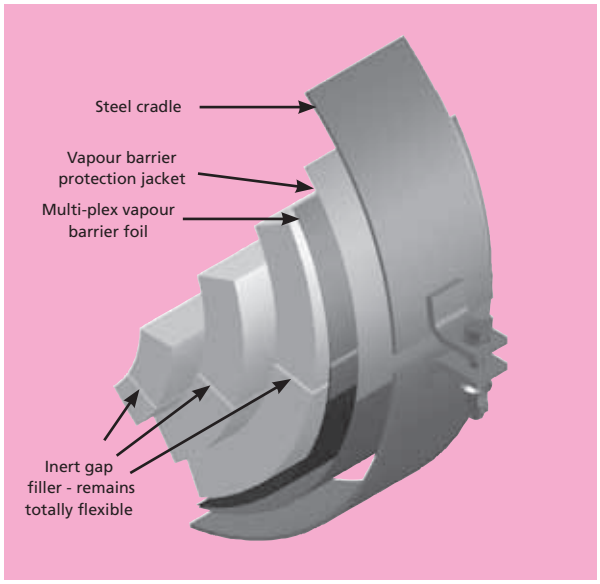

Mutli-layer construction.

DISC SPRING CONFIGURATION

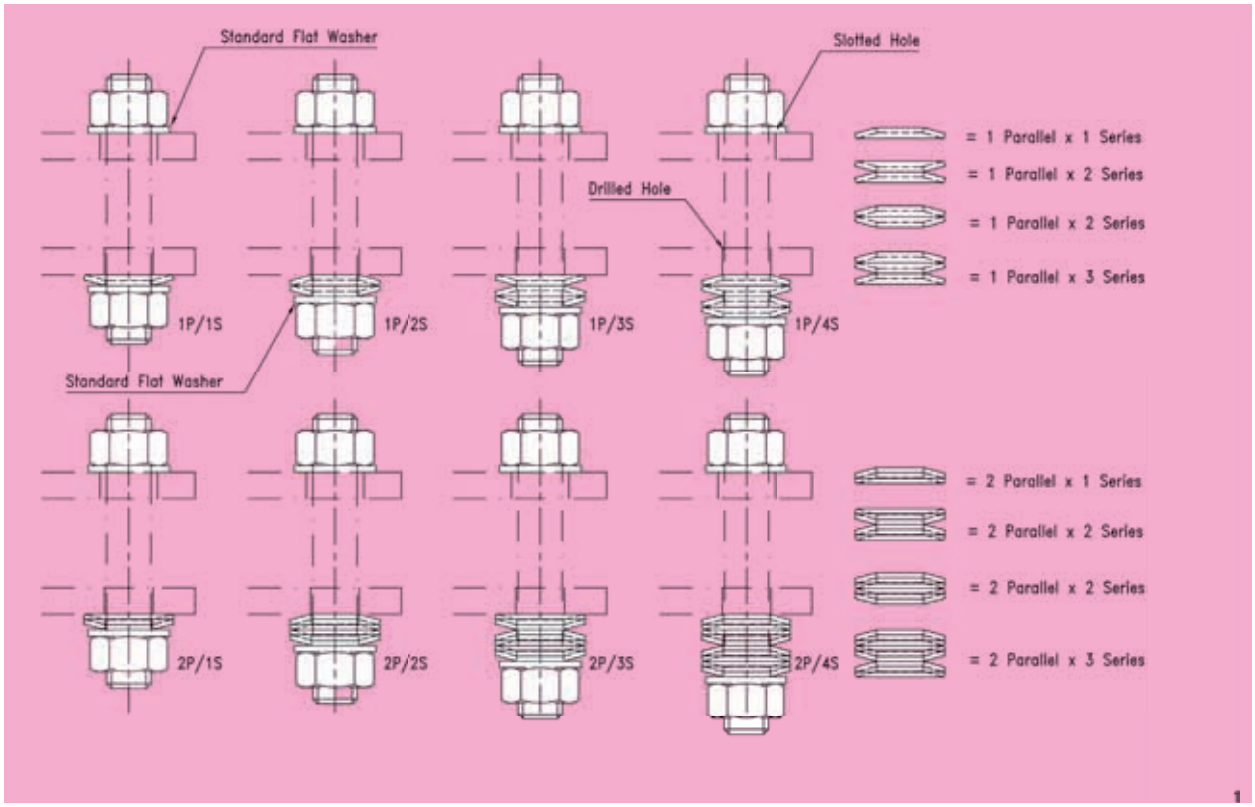

The use of disc springs will maintain a nominal compressive force between the PUF ensuring that regardless of applied vertical loading there will always be positive force between the PUF and the Pipe thereby eliminating the possibility of the pipe 'floating' inside the insulation.

In practice the pipe cools to the same temperature of the fluid it carries. The inside face of the insulation will also cool to this temperature but the outer face of the PUF, exposed to the ambient conditions of the local environment will be held at a much higher temperature.

The PUF therefore has a large temperature gradient through its thickness causing the inside face to contract and effectively pulling it away from the shrinking pipe. Installed correctly, using appropriate mastics, adhesives and gap filling materials the PUF insulation will contract under the pressure exerted by the disc springs and remain in contact with the pipe.

The above diagram explains the terminology used and shows how disc springs should be installed. We will provide bolt torque values on a contract by contract basis since this must take in to account the thickness of the insulation.

TYPE CS01 CRYOGENIC PIPE SHOE

PIPE SIZE		PIPE	DIMENSIONS		SWL (N)	
		OD	A	L	VERT	HOR
½”	15	21.3	100	150	1176	679
¾”	20	26.9	100	150	1485	857
1”	25	33.7	100	150	1861	1074
1½”	40	48.3	100	150	2667	1540
2”	50	60.3	100	300	6660	3845
2½”	65	76.1	100	300	8406	4853
3”	80	88.9	100	300	9820	5670
4”	100	114.3	150	300	12626	7290
6”	150	168.3	150	300	18591	10734
8”	200	219.1	200	450	59152	34153
10”	250	273	250	450	73705	42555
12”	300	323.9	300	450	87447	50489
14”	350	355.6	330	450	96005	55430
16”	400	406.4	350	450	109721	63349
18”	450	457	350	450	123382	71237
20”	500	508	400	450	137151	78187
22”	550	558.8	400	450	15866	87105
24”	600	610	500	750	274483	158478
26”	650	660.4	500	750	534891	308829
28”	700	711.2	500	750	675038	332585
30”	750	762	600	750	617183	356341
32”	800	812.8	600	750	658328	380097
34”	850	863.6	600	750	699474	403853
36”	900	914	650	750	740295	427422
38”	950	965.2	650	750	781765	451366
40”	1000	1016	650	750	822911	475122
42”	1050	1066.8	810	750	864056	498878
44”	1100	1117.6	840	750	905202	522634
46”	1150	1168.4	880	750	946348	546390
48”	1200	1219.2	880	750	987493	570146
50”	1250	1270	960	750	1028639	593902
52”	1300	1320.8	1000	750	1069784	617658
56”	1400	1422.4	1080	750	1152076	665171
58”	1450	1473.2	1080	750	1193221	688927
64”	1600	1625.6	1080	750	1416658	760195
66”	1650	1676.4	1200	750	1357803	783951
70”	1750	1778	1200	750	1440094	831463
72”	1800	1828.8	1200	750	1481241	855220

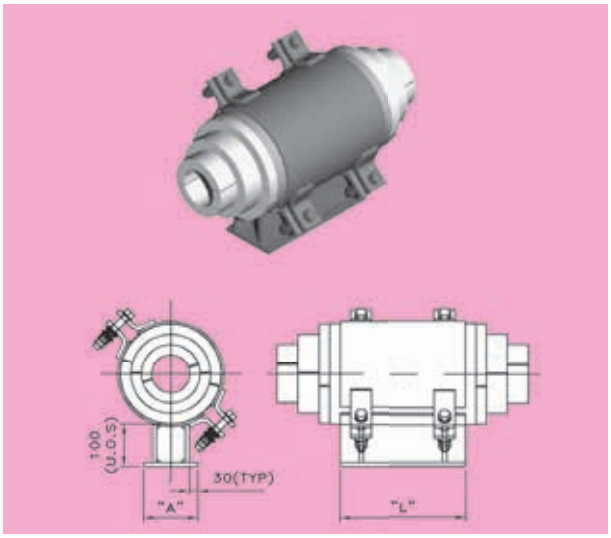

CS-01
For pipe sizes ½” to 3” NB.

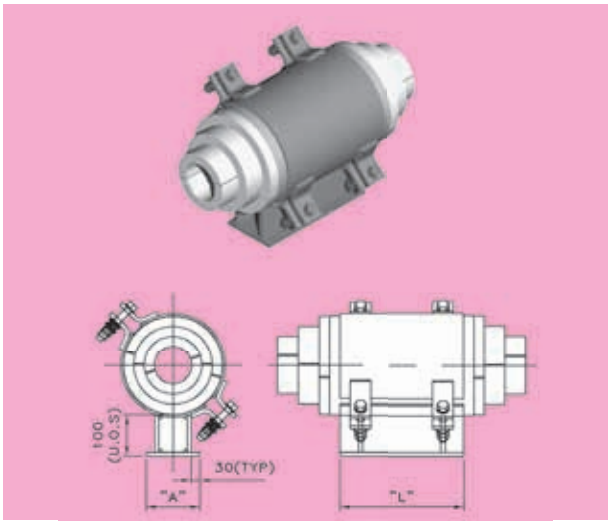

CS-01
For pipe sizes over 3” NB.

TYPE CG01, CG02 & CG03 SHOES

PIPE SIZE		SWL (N)		
		VERT	HOR	AXIAL
½”	15	1176	679	150
¾”	20	1485	857	150
1”	25	1861	1074	170
1½”	40	2667	1540	470
2”	50	6660	3845	610
2½”	65	8406	4853	770
3”	80	9820	5670	970
4”	100	12626	7290	1210
6”	150	18591	10734	1380
8”	200	59152	34153	2180
10”	250	73705	42555	2550
12”	300	87447	50489	3270
14”	350	96005	55430	3280
16”	400	109721	63349	3280
18”	450	123382	71237	3280
20”	500	137151	78187	3280
22”	550	150866	87105	3280
24”	600	274483	158478	4920
26”	650	534891	308829	4920
28”	700	568038	332585	9160
30”	750	617183	356341	9160
32”	800	658328	380097	9160
34”	850	699474	403853	9160
36”	900	740295	427422	9160
38”	950	781765	451366	9160
40”	1000	822911	475122	9160
42”	1050	864056	498878	14290
44”	1100	905202	522634	14290
46”	1150	946348	546390	14290
48”	1200	987493	570146	14290
50”	1250	1028639	593902	14290
52”	1300	1069784	617658	14290
56”	1400	1152076	665171	14290
58”	1450	1193221	688927	14290
64”	1600	1416658	760195	20590
66”	1650	1357803	783951	20590
70”	1750	1440094	831463	20590
72”	1800	1481241	855220	20590

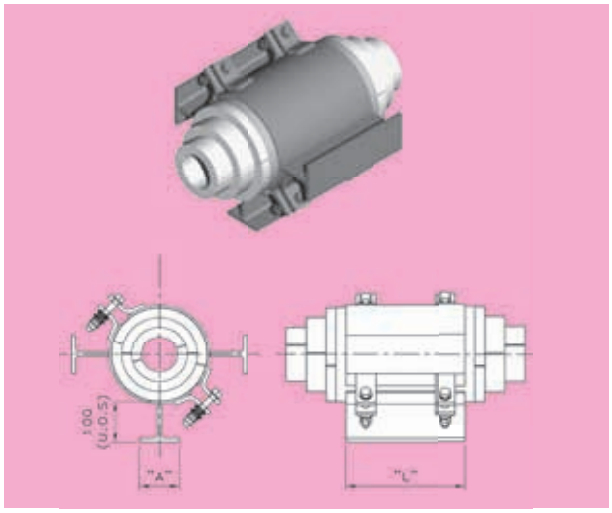

CG-01
For pipe sizes ½” to 3” NB.

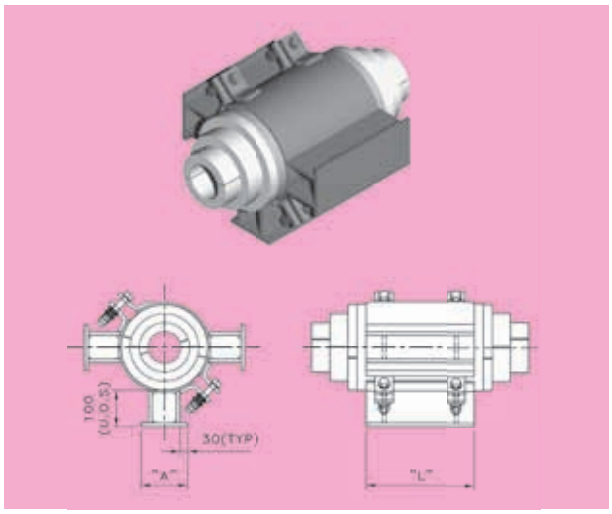

CG-01
For pipe sizes over 3” NB.

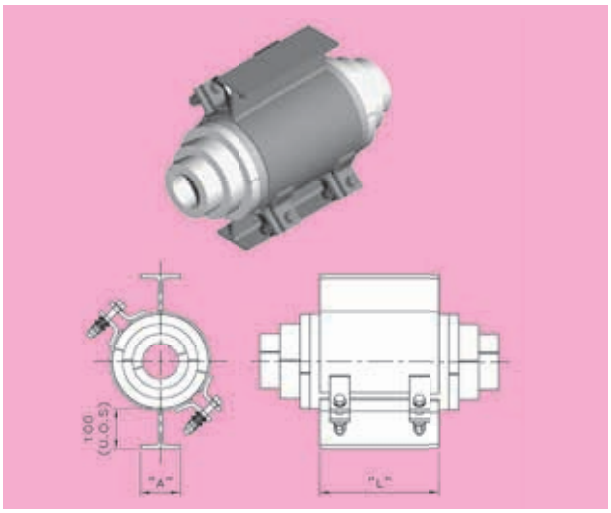

CG-02
For pipe sizes ½” to 3” NB.

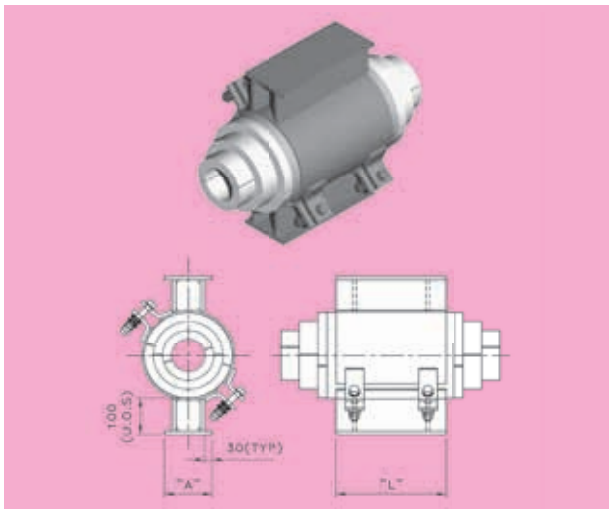

CG-02
For pipe sizes over 3” NB.

TYPE CG01, CG02 & CG03 SHOES

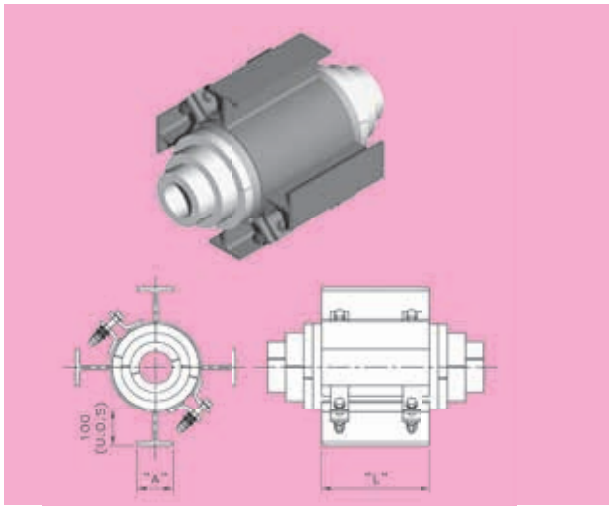

CG-03
For pipe sizes ½" to 3" NB.

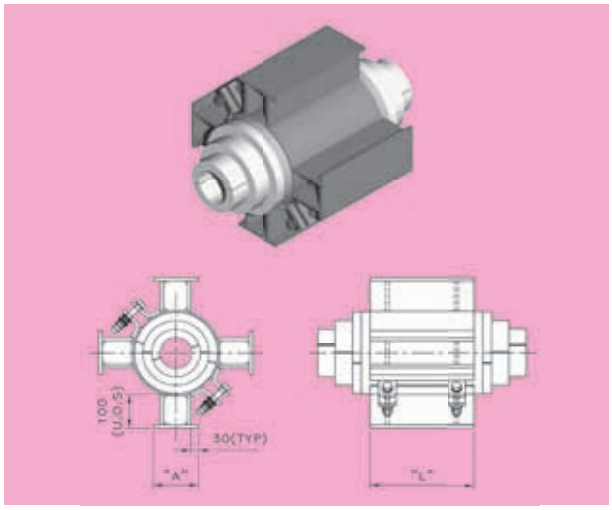

CG-03
For pipe sizes over 3" NB.

TYPE CH01 HANGER

PIPE SIZE		D	E	F	W	T	SWL (kN)
6"	150	90	40	70	150	25	10.73
8"	200	90	40	70	150	25	22.76
10"	250	90	40	70	150	25	28.37
12"	300	90	40	70	150	25	33.65
14"	350	90	40	70	150	25	36.95
16"	400	90	40	70	150	25	42.23
18"	450	90	40	70	150	25	47.49
20"	500	90	40	70	150	25	52.79
22"	550	90	40	70	150	25	58.07
24"	600	90	40	70	150	25	63.39
26"	650	140	50	100	200	25	164.70
28"	700	140	50	100	200	25	177.37
30"	750	140	50	100	200	25	190.04
32"	800	140	50	100	200	25	202.71
34"	850	140	50	100	200	25	215.38
36"	900	140	50	100	200	25	227.95
38"	950	140	50	100	200	25	240.72
40"	1000	140	50	100	200	25	253.39

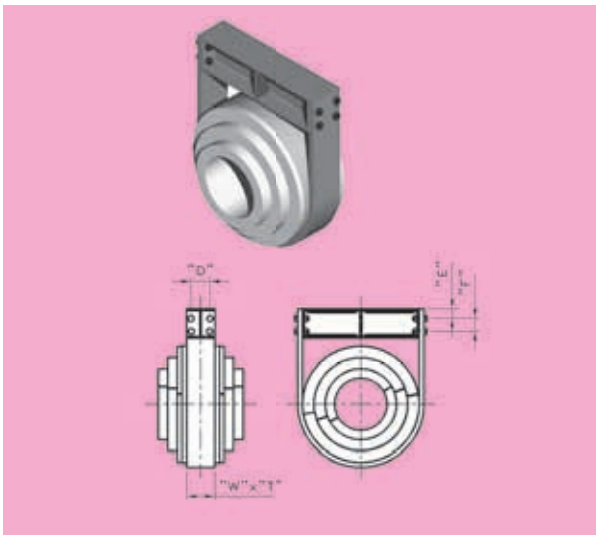

CH-01

TYPE CL01 & CL03 SHOES

PIPE SIZE		SWL (N)		
		VERT	HOR	AXIAL
2”	50	6660	3845	1998
2½”	65	8406	4853	2521
3”	80	9820	5670	2946
4”	100	12626	7290	3787
6”	150	18591	10734	5577
8”	200	59152	34153	17745
10”	250	73705	42555	22111
12”	300	87447	50489	26234
14”	350	96005	55430	28801
16”	400	109721	63349	32916
18”	450	123382	71237	30714
20”	500	137151	78187	41145
22”	550	15866	87105	45259
24”	600	274483	158478	82344
26”	650	534891	308829	160467
28”	700	675038	332585	172811
30”	750	617183	356341	185154
32”	800	658328	380097	197498
34”	850	699474	403853	209842
36”	900	740295	427422	222088
38”	950	781765	451366	234529
40”	1000	822911	475122	246873
42”	1050	864056	498878	259216
44”	1100	905202	522634	271560
46”	1150	946348	546390	283904
48”	1200	987493	570146	296247
50”	1250	1028639	593902	308591
52”	1300	1069784	617658	320935
56”	1400	1152076	665171	345622
58”	1450	1193221	688927	357966
64”	1600	1416658	760195	394997
66”	1650	1357803	783951	407340
70”	1750	1440094	831463	432028
72”	1800	1481241	855220	444372

Please provide full piping specification & design conditions.

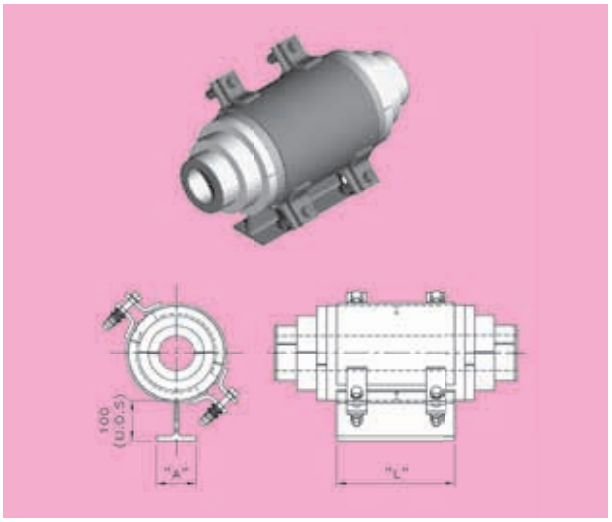

CL-01
For pipe sizes ½” to 3” NB.

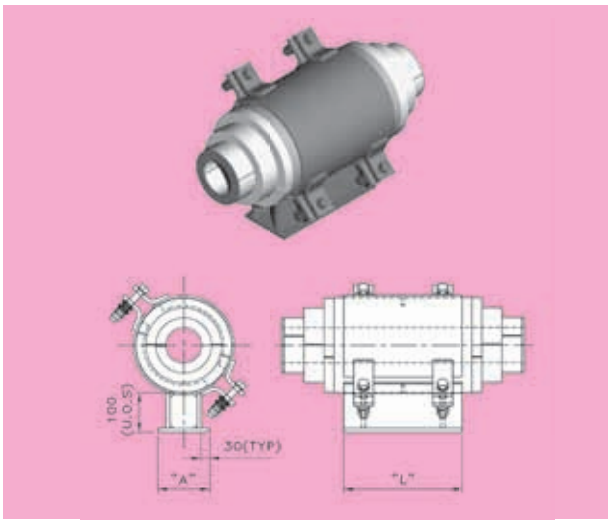

CL-01
For pipe sizes over 3” NB.

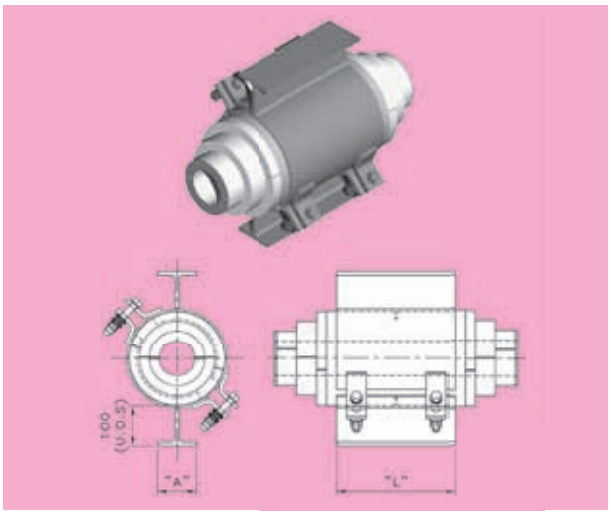

CL-03
For pipe sizes ½” to 3” NB.

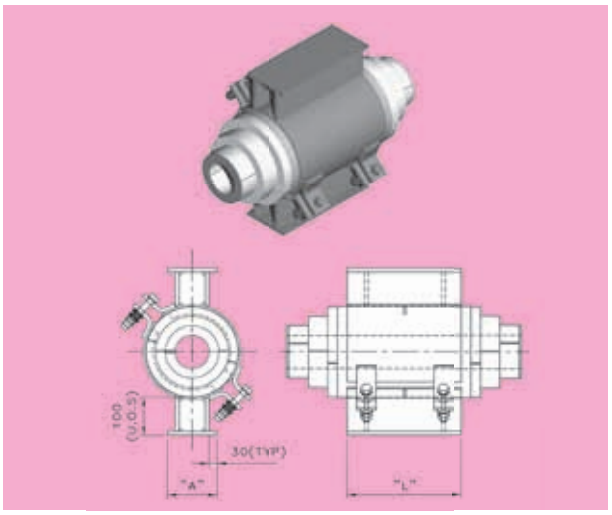

CL-03
For pipe sizes over 3” NB.

TYPE CL02 & CL04 SHOES

PIPE SIZE		SWL (N)		
		VERT	HOR	AXIAL
2”	50	6660	3845	1998
2½”	65	8406	4853	2521
3”	80	9820	5670	2946
4”	100	12626	7290	3787
6”	150	18591	10734	5577
8”	200	59152	34153	17745
10”	250	73705	42555	22111
12”	300	87447	50489	26234
14”	350	96005	55430	28801
16”	400	109721	63349	32916
18”	450	123382	71237	30714
20”	500	137151	78187	41145
22”	550	15866	87105	45259
24”	600	274483	158478	82344
26”	650	534891	308829	160467
28”	700	675038	332585	172811
30”	750	617183	356341	185154
32”	800	658328	380097	197498
34”	850	699474	403853	209842
36”	900	740295	427422	222088
38”	950	781765	451366	234529
40”	1000	822911	475122	246873
42”	1050	864056	498878	259216
44”	1100	905202	522634	271560
46”	1150	946348	546390	283904
48”	1200	987493	570146	296247
50”	1250	1028639	593902	308591
52”	1300	1069784	617658	320935
56”	1400	1152076	665171	345622
58”	1450	1193221	688927	357966
64”	1600	1416658	760195	394997
66”	1650	1357803	783951	407340
70”	1750	1440094	831463	432028
72”	1800	1481241	855220	444372

Please provide full piping specification & design conditions.

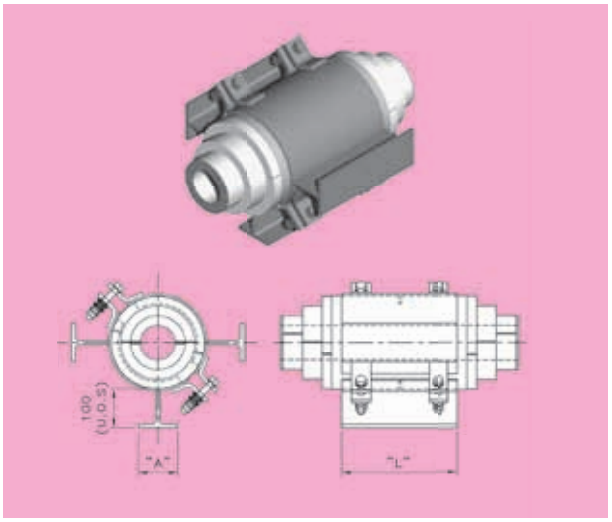

CL-02
For pipe sizes ½” to 3” NB.

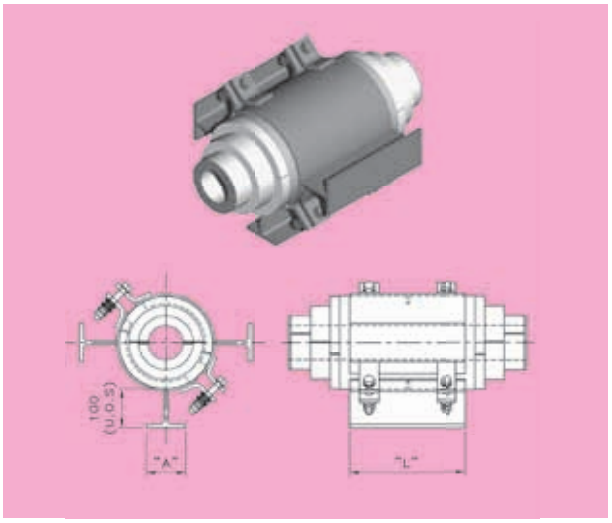

CL-02
For pipe sizes over 3” NB.

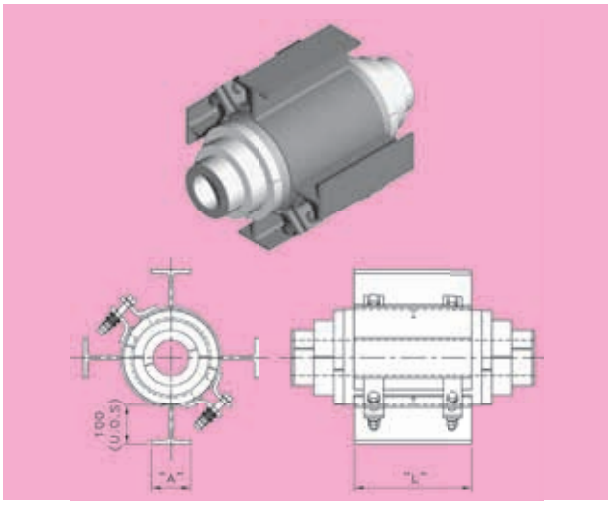

CL-04
For pipe sizes ½” to 3” NB.

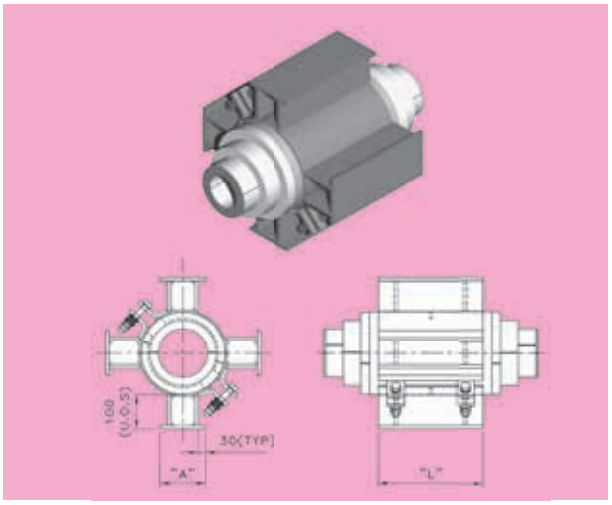

CL-04
For pipe sizes over 3” NB.

Densified Wood

Where insulation is not the primary concern and high load carrying capacity is required we recommend the use of Densified Wood as the thermal break.

A material that exhibits compressive strength approaching that of carbon steel, is totally resistant to corrosion and will not absorb moisture is ideally suited to the task of both supporting and anchoring cold pipework.

With extremely good screw holding capacity, pipe shoes and sliding plates can be safely fixed to our Densified Wood allowing a wide variety of support configurations to be used in conjunction with this material.

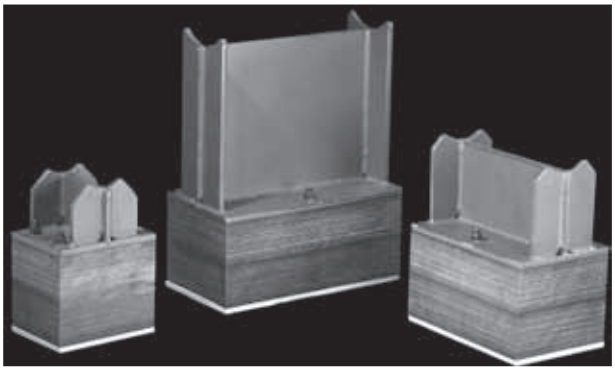

Simple weld-on shoes.

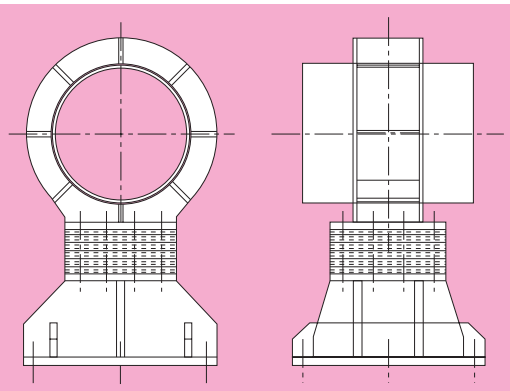

Figure 1

Figure 1 shows a typical cryogenic anchor where the pipe and upper part of the anchor would be insulated using Polyurethane Foam (PUF). The forces are transmitted through the Densified Wooden block into the base structure while the cold temperature is prevented from reaching it.

Such anchors and supports are designed to meet the customer's specific requirements and provide the best solution to a unique set of conditions.

Figure 2 shows a composite anchor using Densified Wood to transfer the forces and HD PUF to insulate the pipe.

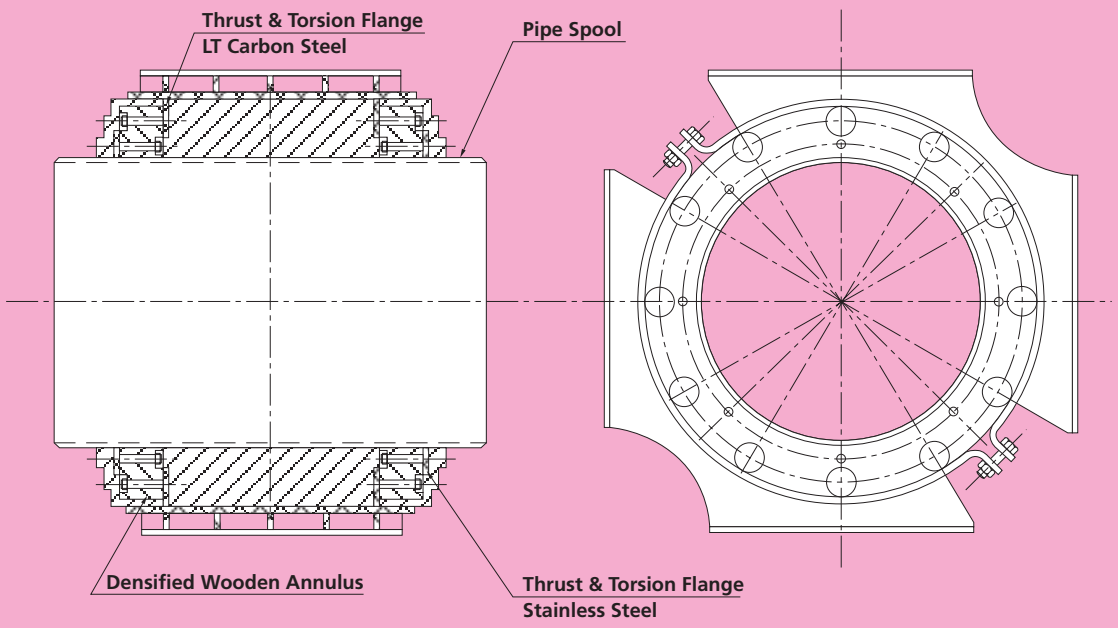

Figure 2

CRYOGENIC SUPPORTS

Due to the wide and varying range of support requirements we have not shown a 'standard' product for this material. Pipe Supports Group will be pleased to design supports that meet your specific requirements based upon the information provided in this catalogue.

Properties of Densified Wood

Specific Gravity		>1,35 g/cm³	DIN 53 479
Modulous Of Elasticity In Flexure		14000 N/mm²	DIN 53 452
Compressive Strength	⊥	250 N/mm²	DIN 53 454
Compressive Strength	||	170 N/mm²	DIN 53 454
Flexural Strength	⊥ and ||	120 N/mm²	DIN 53 452
Tensile Strength	||	70 N/mm²	DIN 53 455
Impact Strength	⊥	25 kJ/m²	DIN 53 453
Impact Strength	||	20 kJ/m²	DIN 53 453
Oil Absorption		Nil	DIN 7 707
Thermal Conductivity At Rt 20 °C		ca.0,30 [W/mK]	DIN 52 612
Operating Temperatures Continuous		90 °C	DIN 7 707
Electric Strength	|| 20 °C	65 kV/25 mm	IEC 243-2/VDE 0303T.21
Electric Strength	|| 90 °C	40 kV/25 mm	ICE 243-2/VDE 0303T.21
Dielectric Loss Factor At 50Hz	20 °C	0.02 tan ∂	DIN 53 483
Insulation Resistance		10^6 Ω × cm	IEC 93/ VDE 0303T.30
Track Resistance		CT 100	IEC 112/ VDE 0303T.1

Note: The data mentioned in the table gives average values obtained by statistical examination of laboratory results. This data is provided purely for information and shall not be regarded as binding.

NOTES

BERGEN PIPE SUPPORTS KEKSA
Strategic Partnership

Kinetic Energy Factory Company - KEKSA

Section N, Block 9, Lot No 10,
Road No 267
Support Industries Area 3
31951 Jubail – KSA

☎ +966(13)3418899
🖷 +966(13)3417799
✉ sales@keksa.com

Bergen Pipe Supports India
Bergen Pipe Supports (India) Private Ltd.
No. 720, Belerica Road
Sector 22, Sri City DTZ
Varadaiahpalem Taluk (Mandal)
Chittoor District– 517541
Andhra Pradesh
India

☎ +91 8576 305666
✉ bpsi@pipesupports.com

Bergen Pipe Supports USA
Bergen Pipe Supports, Inc.
225 Merrimac Street
Woburn, MA 01801
USA

☎ +1 (0)781 935 9550
🖷 +1 (0)781 938 0026
✉ bpw@pipesupports.com

Carpenter and Paterson, Inc.
434 Latigue Road
Waggaman
LA 70094
USA

☎ +1 (0)504 431 7722
🖷 +1 (0)504 431 7900
✉ cp@pipesupports.com

Canada
BPC@pipesupports.com

India - Delhi
BPSD@pipesupports.com

India - Kolkata
BPSK@pipesupports.com

India - Mumbai
BPSM@pipesupports.com

India - Chennai
BPSC@pipesupports.com

Japan
PSJ@pipesupports.com

SE Asia
BPSC@pipesupports.com

Middle East
sales@keksa.com

UK, Europe & Africa
PSL@pipesupports.com

USA - Chicago
PSU@pipesupports.com

USA - Houston
BPH@pipesupports.com

USA - Waggaman
cp@pipesupports.com

USA - Woburn
BPW@pipesupports.com

www.keksa.com
www.pipesupports.com

A Member of International Group Hill & Smith Holdings PLC

PIPE SUPPORTS GROUP